Form 2582w
(339)
PRINTED IN U. S. A.

SINGER

134w3 and 134w4

THE SINGER MANUFACTURING COMPANY

From the library of: Superior Sewing Machine & Supply LLC

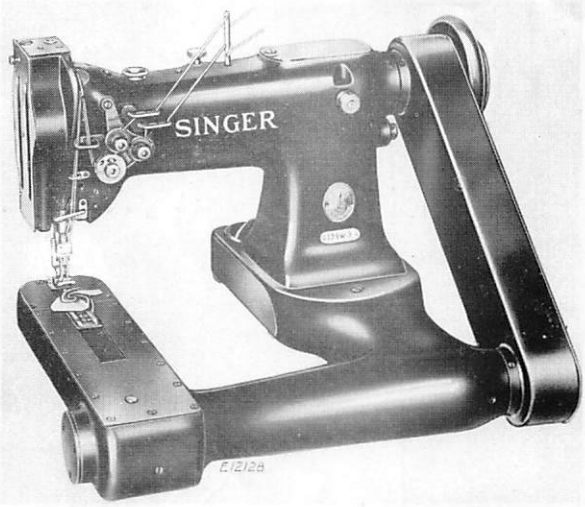

Copyright, U. S. A., 1935 and 1939
by The Singer Manufacturing Co.
All Rights Reserved for all Countries

From the library of: Superior Sewing Machine & Supply LLC

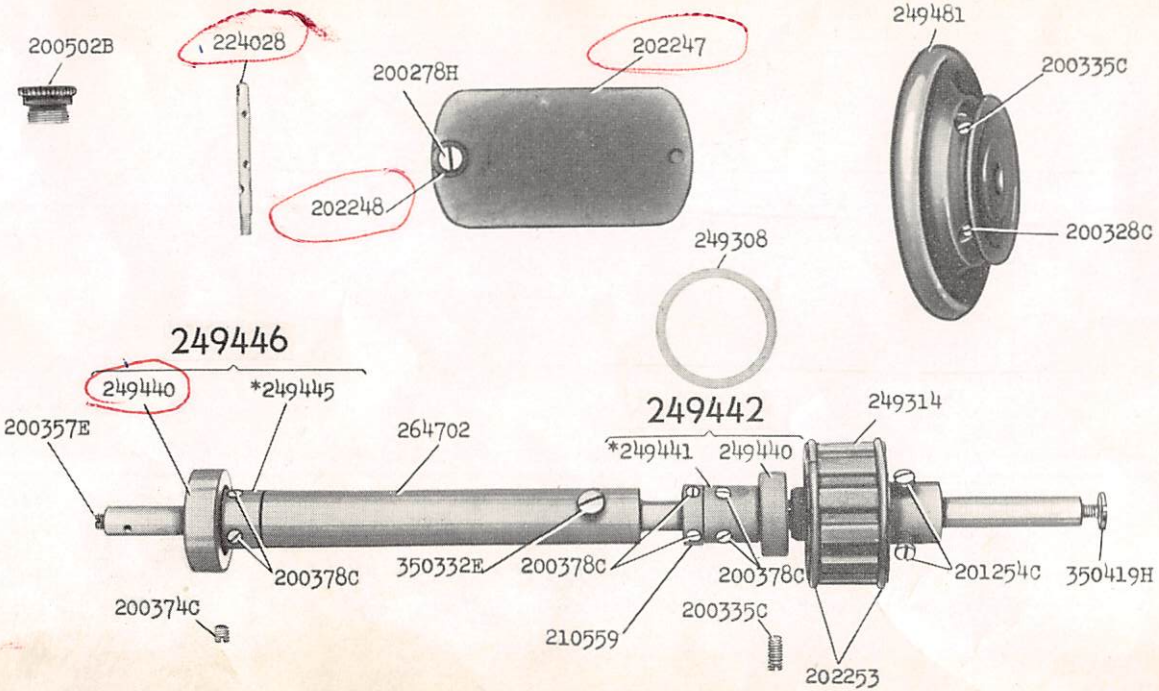

15832 - 1/3

From the library of: Superior Sewing Machine & Supply LLC

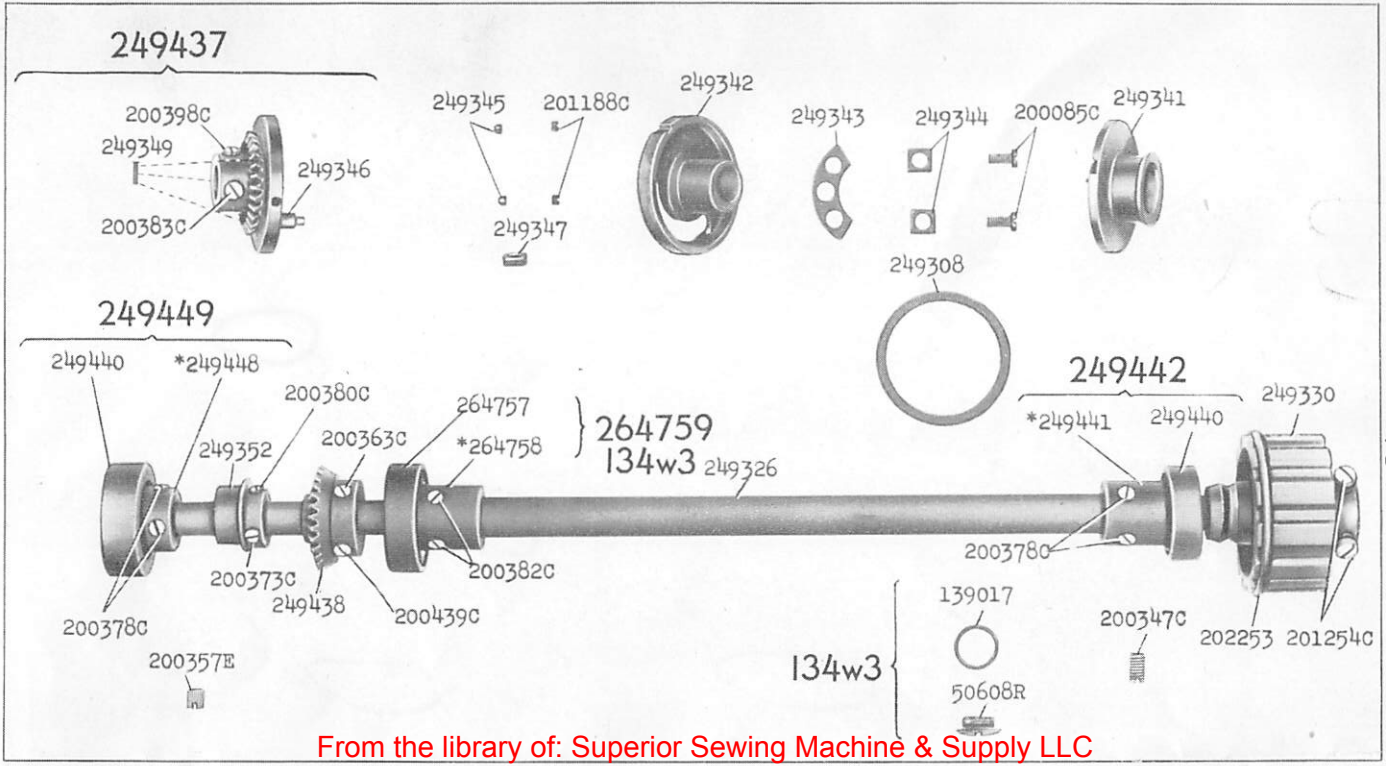

From the library of: Superior Sewing Machine & Supply LLC

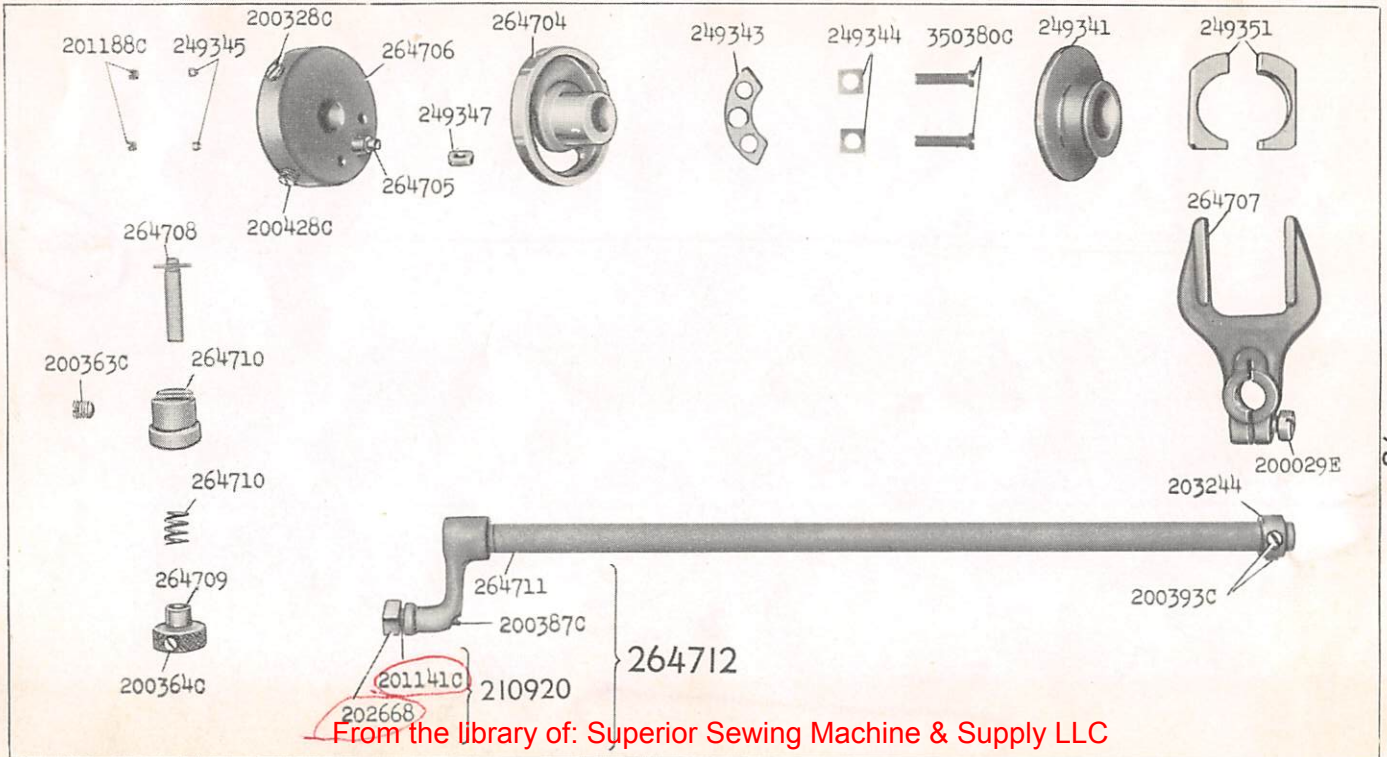

15834 - 3/8

From the library of: Superior Sewing Machine & Supply LLC

264725 / EFJ

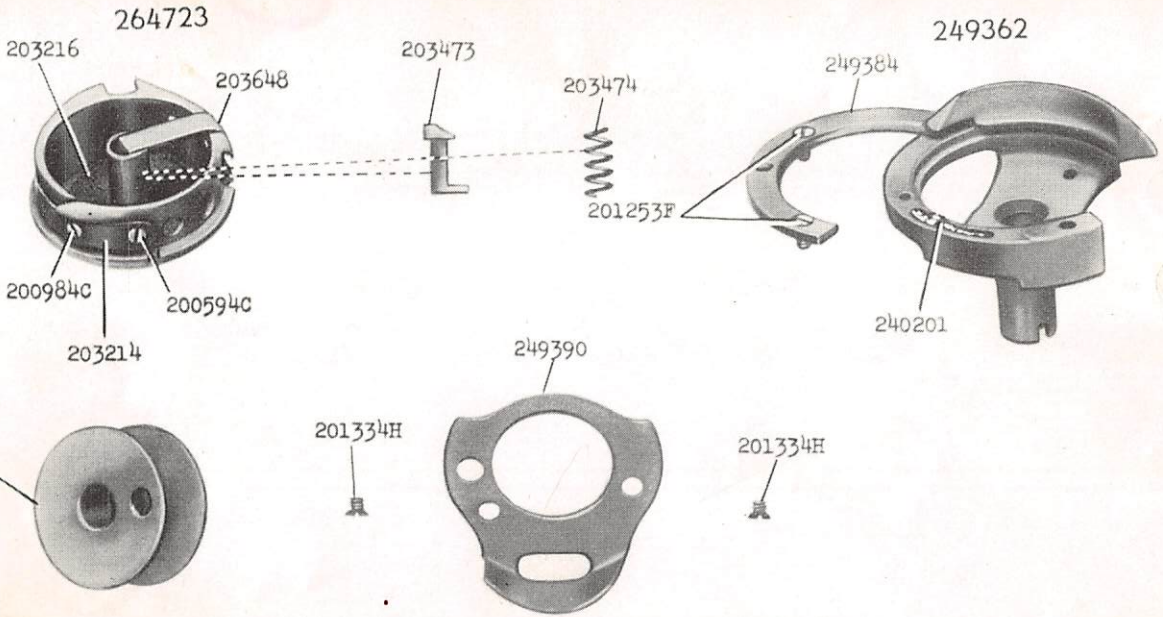

15835

From the library of: Superior Sewing Machine & Supply LLC

264726
RIGHT

264724

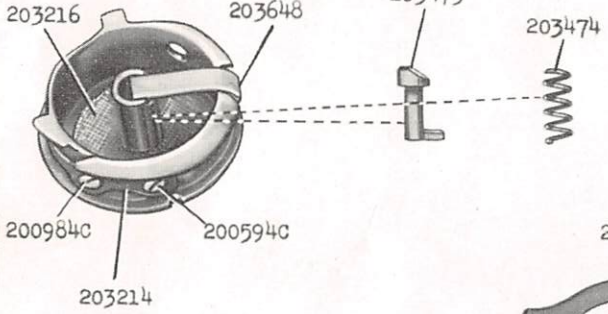

249362

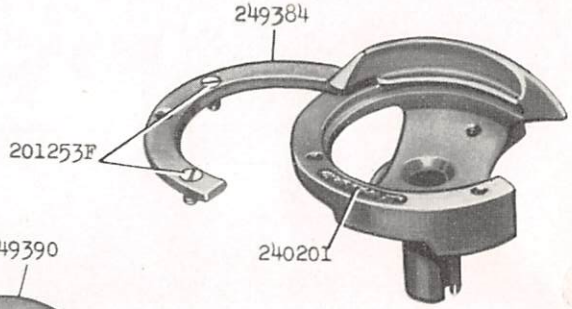

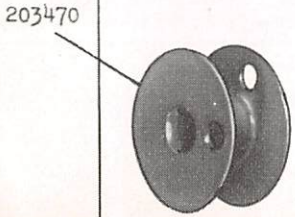

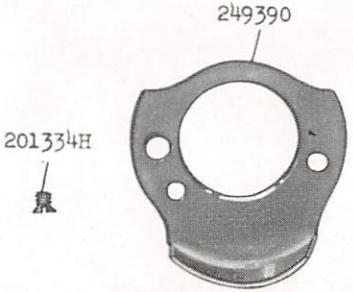

15836

From the library of: Superior Sewing Machine & Supply LLC

15837 - ½
264727

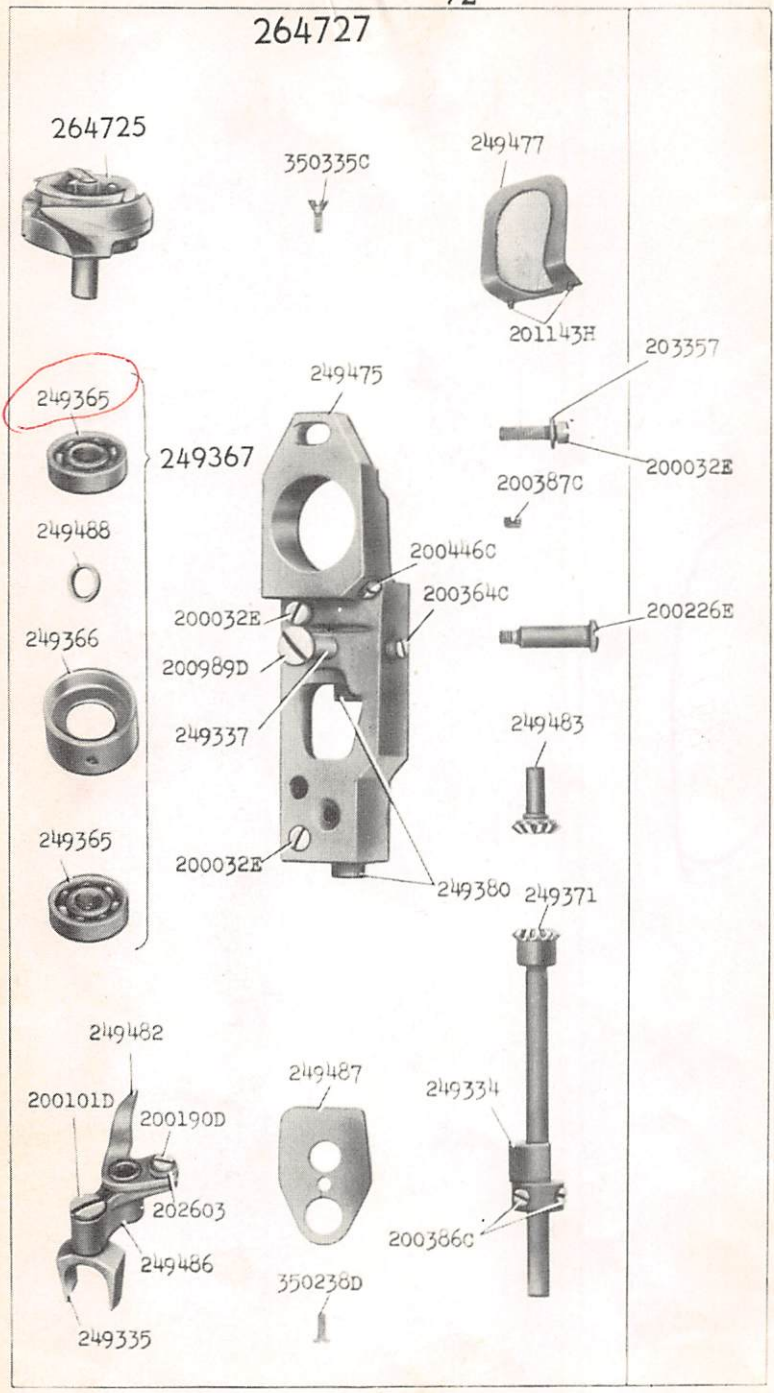

From the library of: Superior Sewing Machine & Supply LLC

15838 - 1/2

264728

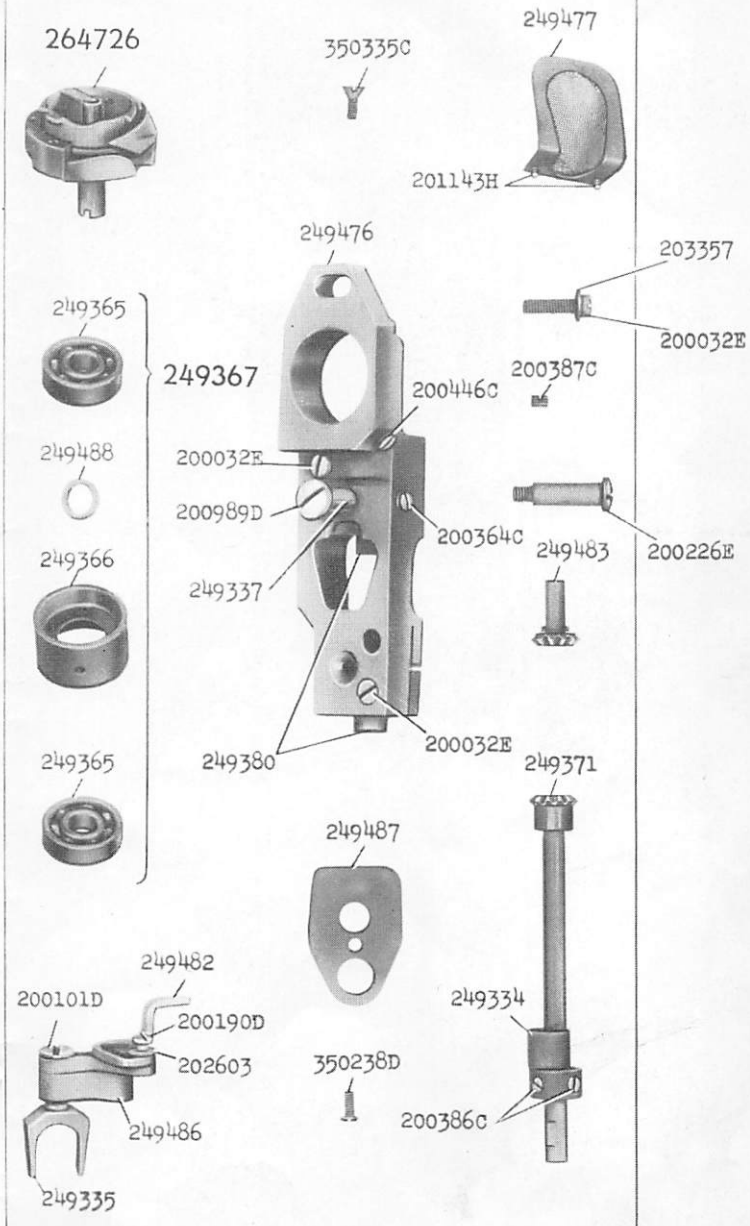

From the library of: Superior Sewing Machine & Supply LLC

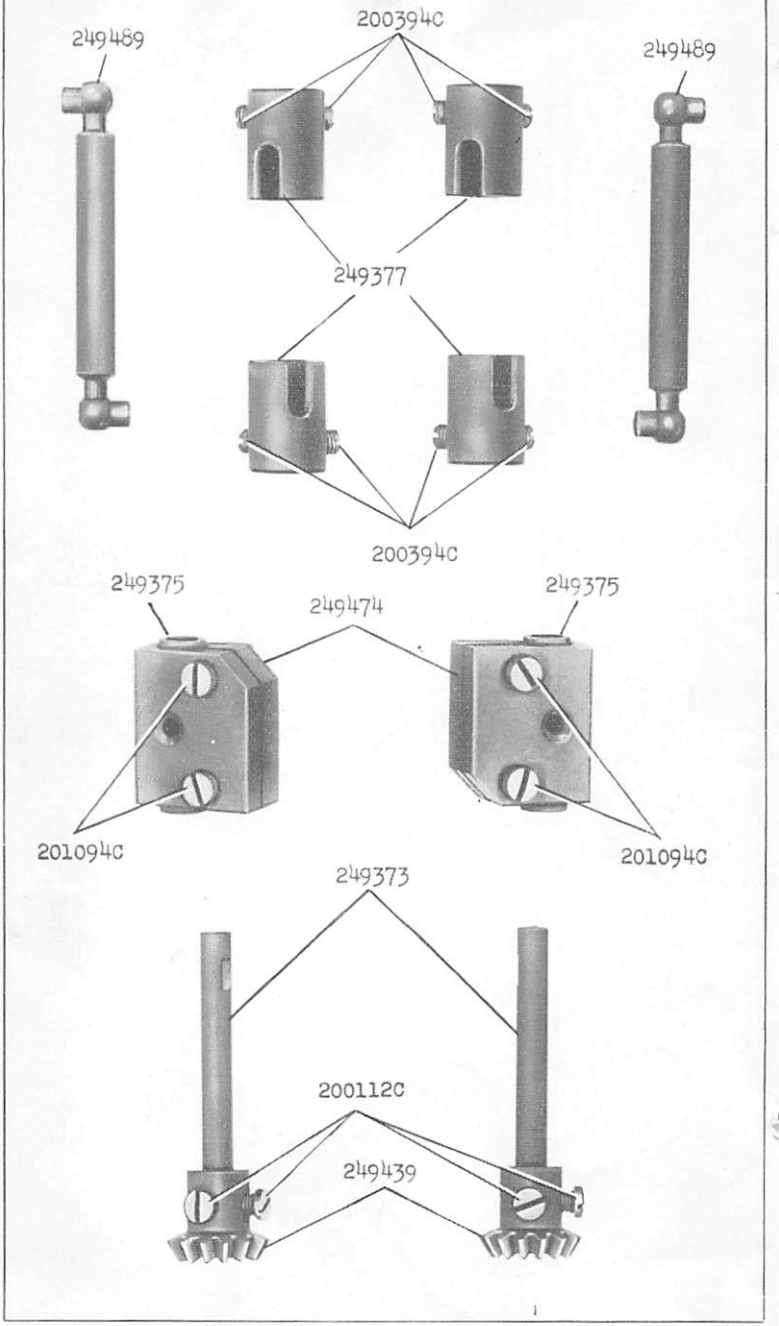

From the library of: Superior Sewing Machine & Supply LLC

15840 - 3/8

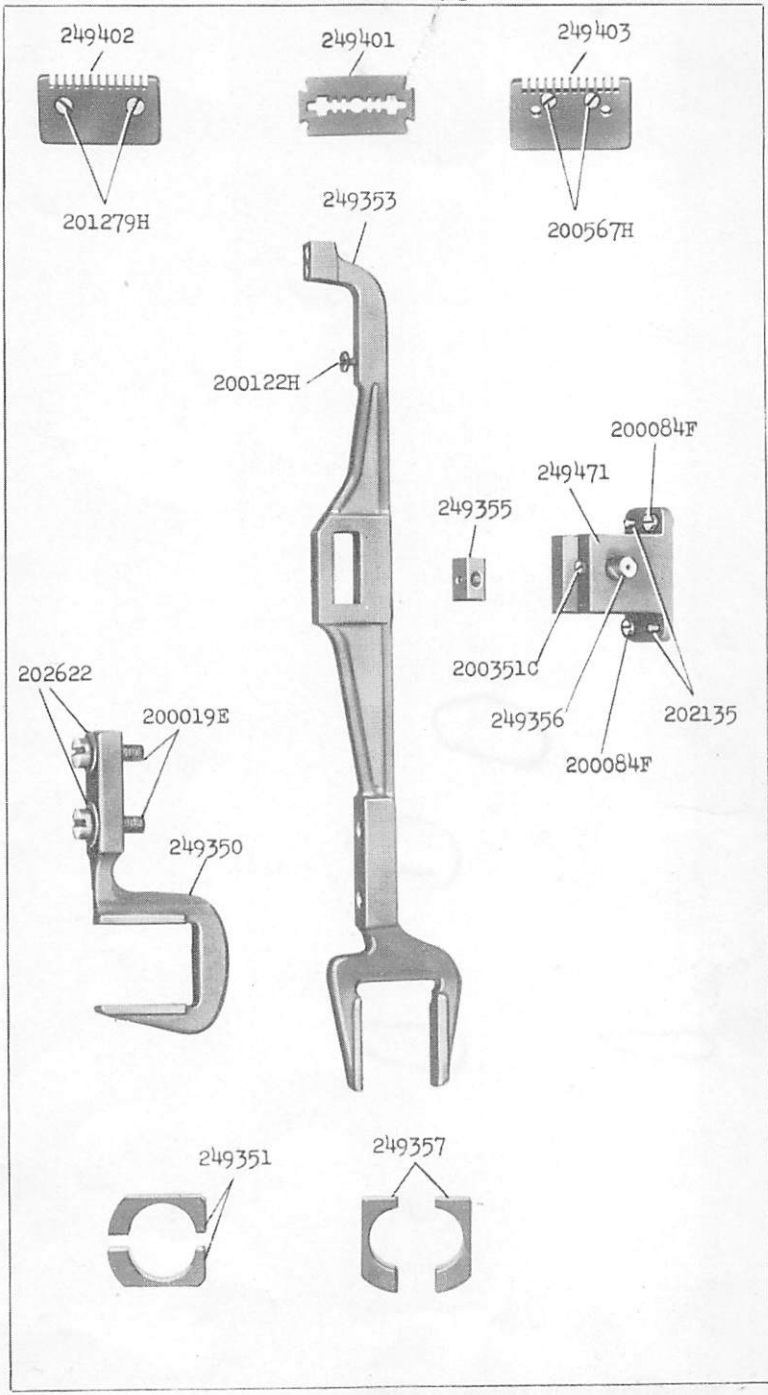

From the library of: Superior Sewing Machine & Supply LLC

15841 - 1/2

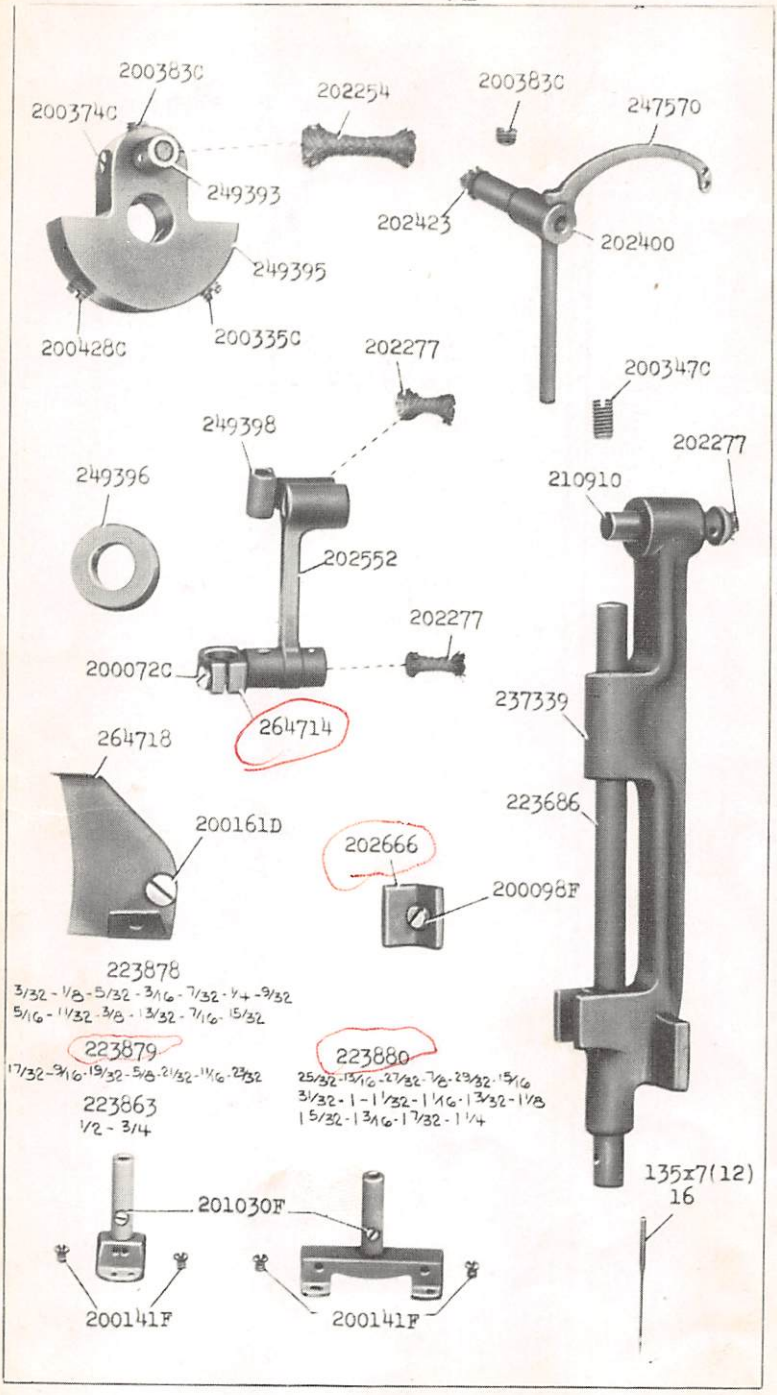

From the library of: Superior Sewing Machine & Supply LLC

15842 - 2/3

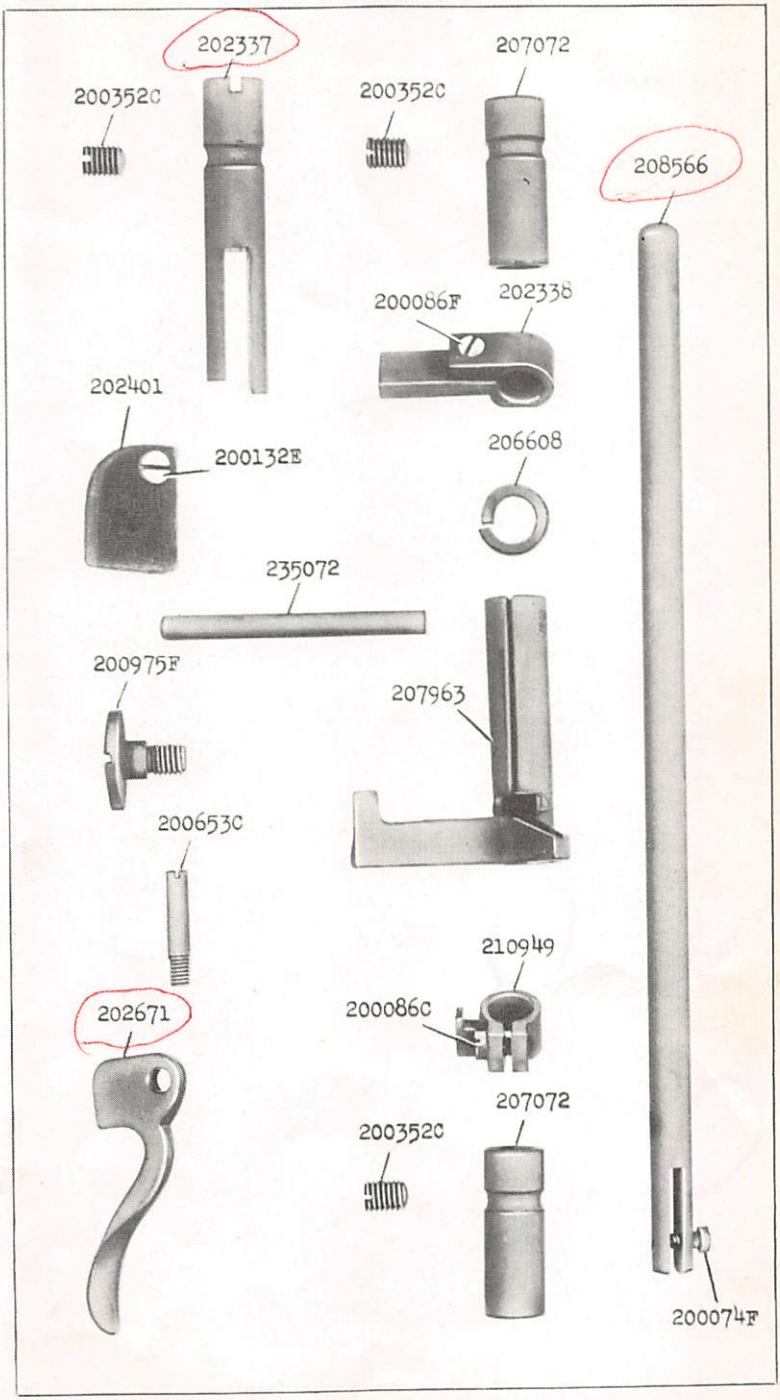

From the library of: Superior Sewing Machine & Supply LLC

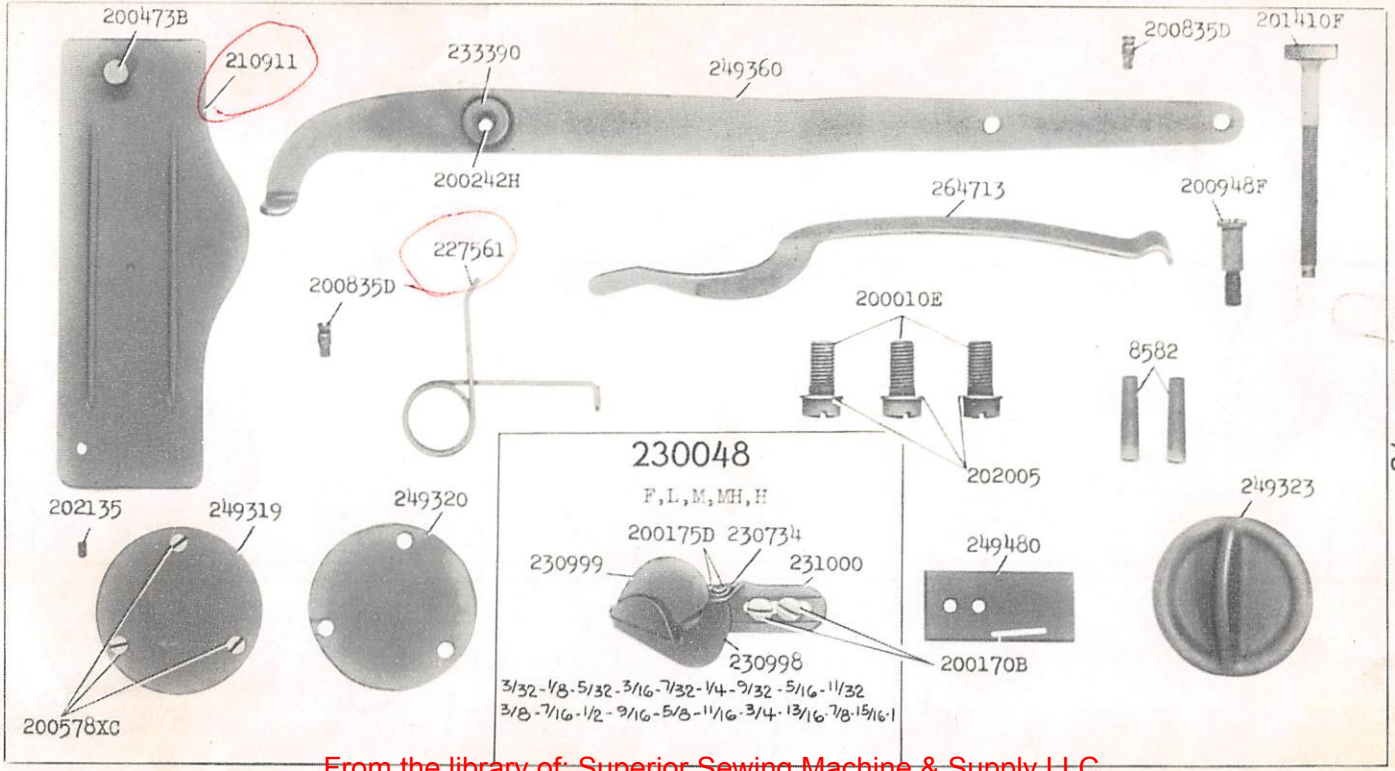

15843 - 3/8

From the library of: Superior Sewing Machine & Supply LLC

15844 - 3/8

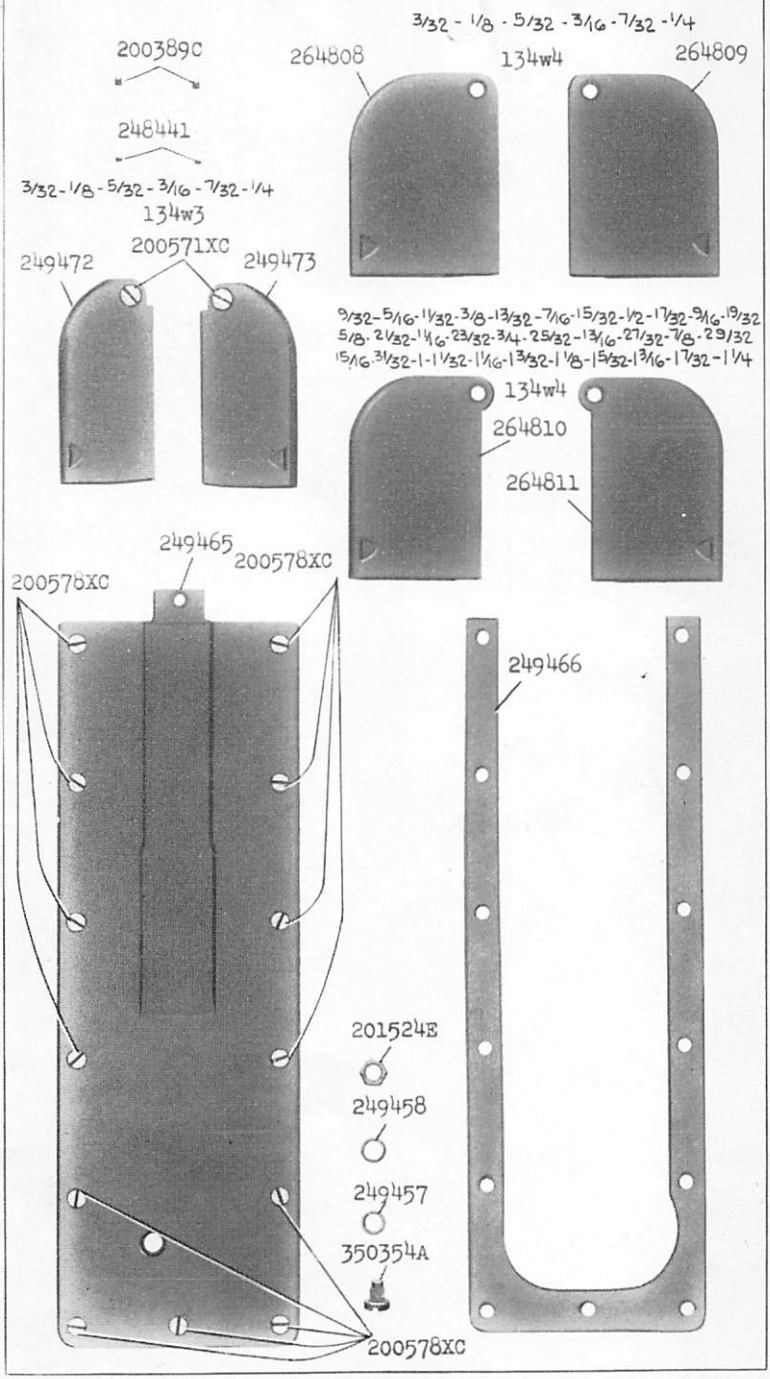

From the library of: Superior Sewing Machine & Supply LLC

15845 - 1/4

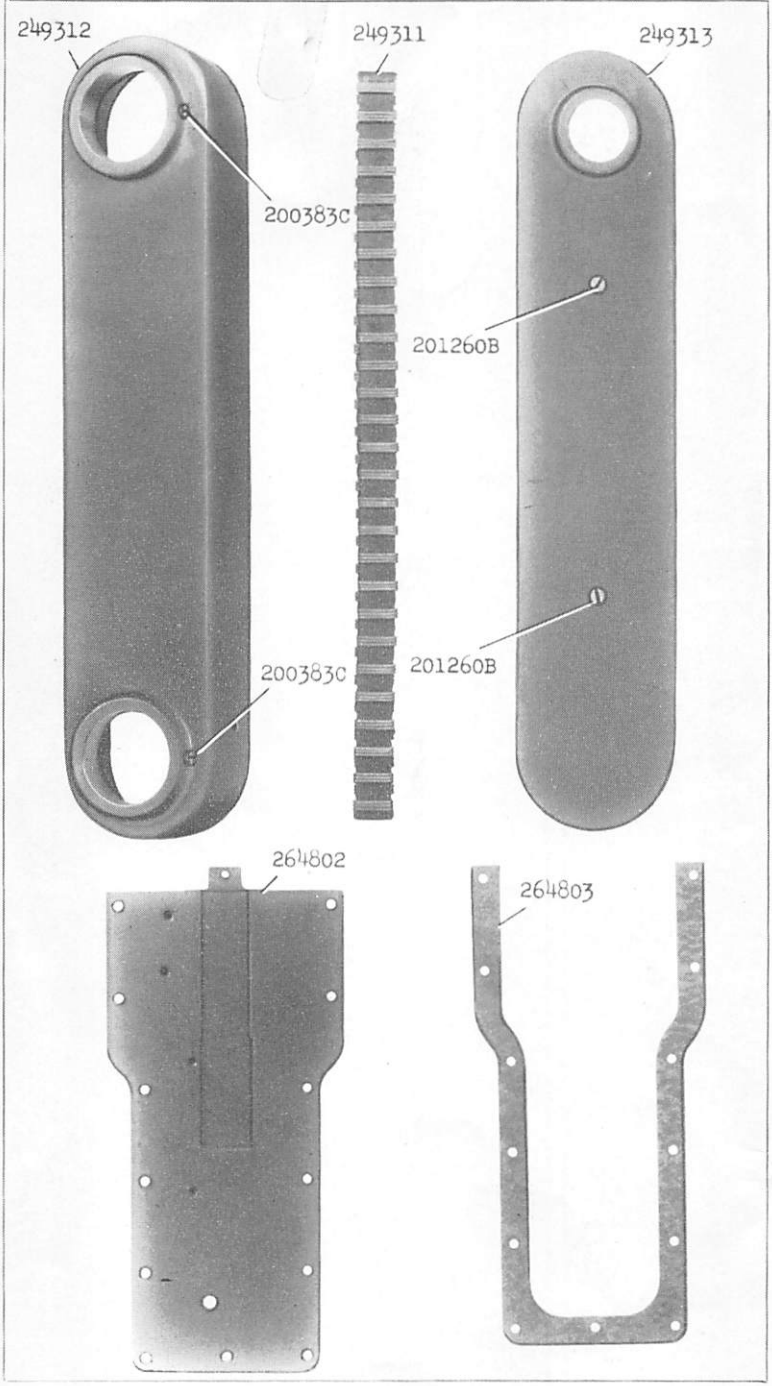

From the library of: Superior Sewing Machine & Supply LLC

249470

134w3

3/32 - 1/8 - 5/32 - 3/16 - 7/32 - 1/4

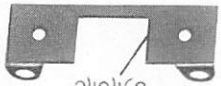

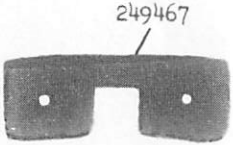

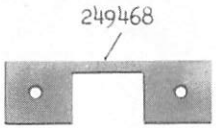

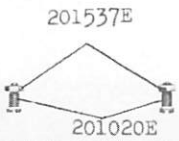

264815

134w4

3/32 - 1/8 - 5/32 - 3/16 - 7/32 - 1/4 - 9/32 - 5/16 - 11/32 - 3/8 - 13/32
7/16 - 15/32 - 1/2 - 17/32 - 9/16 - 19/32 - 5/8

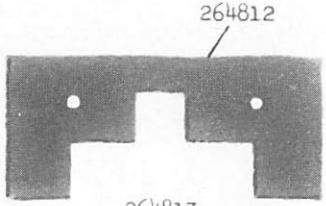

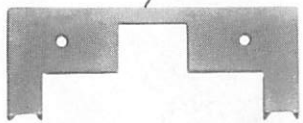

264807

134w4

21/32 - 1 1/16 - 23/32 - 3/4 - 25/32 - 13/16 - 27/32 - 7/8 - 29/32 - 15/16
31/32 - 1 - 1 1/32 - 1 1/16 - 1 3/32 - 1 1/8 - 1 5/32 - 1 3/16 - 1 7/32 - 1 1/4

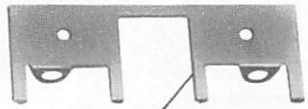

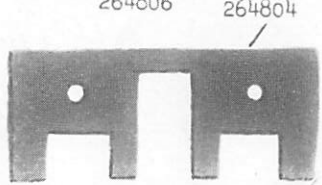

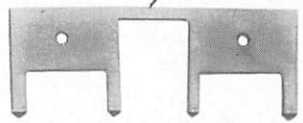

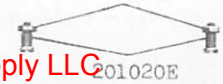

15846 - 3/8

From the library of: Superior Sewing Machine & Supply LLC

264753- 3/32 - 1/8 - 5/32

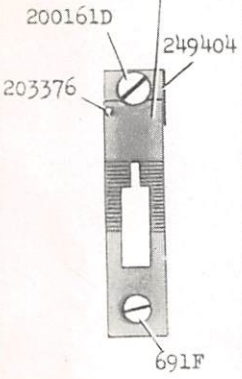

264754- 3/16 - 7/32 - 1/4

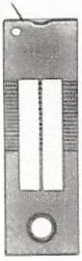

264816

264733-53- 3/32 - 1/8 - 5/32
264734-50- 3/32 - 1/8 - 5/32
264735-46- 1/8 - 5/32
264736-40- 1/8 - 5/32

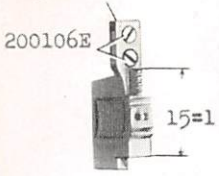

264741-53- 3/16 - 7/32 - 1/4
264742-50- 3/16 - 7/32 - 1/4
264743-46- 3/16 - 7/32 - 1/4
264744-40- 1/4

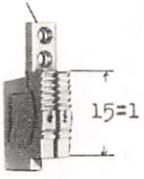

223632-46
223633-40
223634-50
223891-53

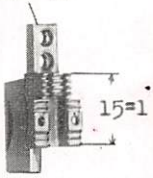

7/16 - 15/32 - 1/2 - 17/32 - 9/16
19/32 - 5/8 - 21/32 - 11/16 - 23/32
3/4 - 25/32 - 13/16 - 27/32 - 7/8
29/32 - 15/16 - 31/32

223629-46- 1/8 - 5/32
223630-40- 1/8 - 5/32
223637-50- 3/32 - 1/8 - 5/32
223889-53- 3/32 - 1/8 - 5/32

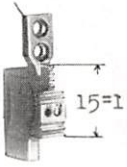

264737-53- 3/16 - 7/32 - 1/4
264738-50- 3/16 - 7/32 - 1/4
264739-46- 3/16 - 7/32 - 1/4

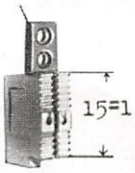

From the library of: Superior Sewing Machine & Supply LLC

224066 - 53

3/32 - 1/8 - 5/32 - 3/16

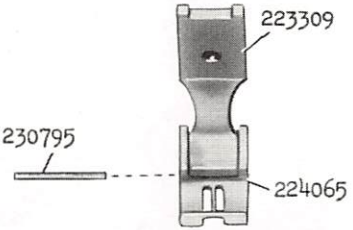

224072 - 50

7/32 - 1/4

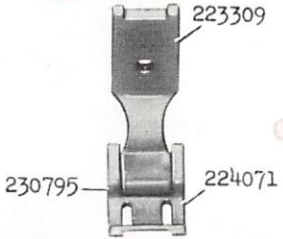

224191 - 50

1/8 - 5/32 - 3/16

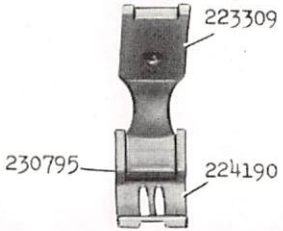

223755 - 50

11/32 - 3/8 - 13/32 - 7/16

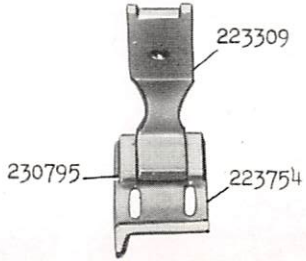

224064 - 50

15/32 - 1/2 - 17/32 - 9/16 - 19/32 - 5/8

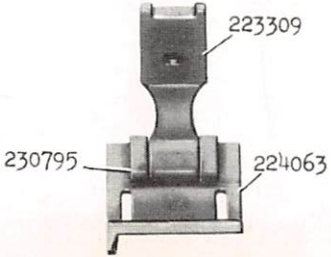

224070 - 50

21/32 - 11/16 - 23/32 - 3/4

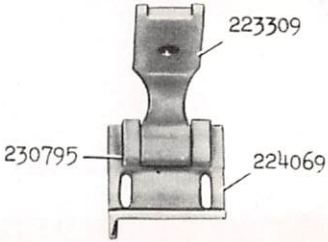

From the library of: Superior Sewing Machine & Supply LLC

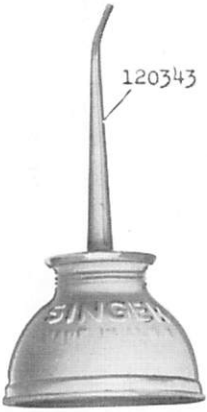

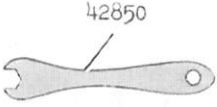

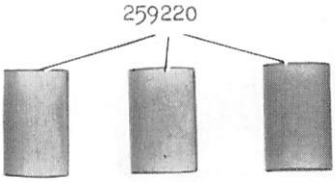

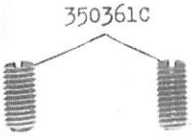

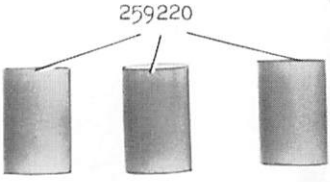

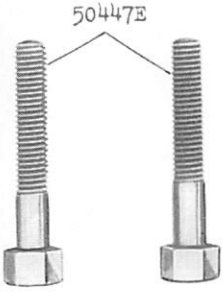

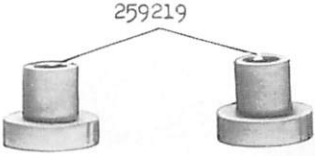

From the library of: Superior Sewing Machine & Supply LLC

15850 - 1/3

259223

225462

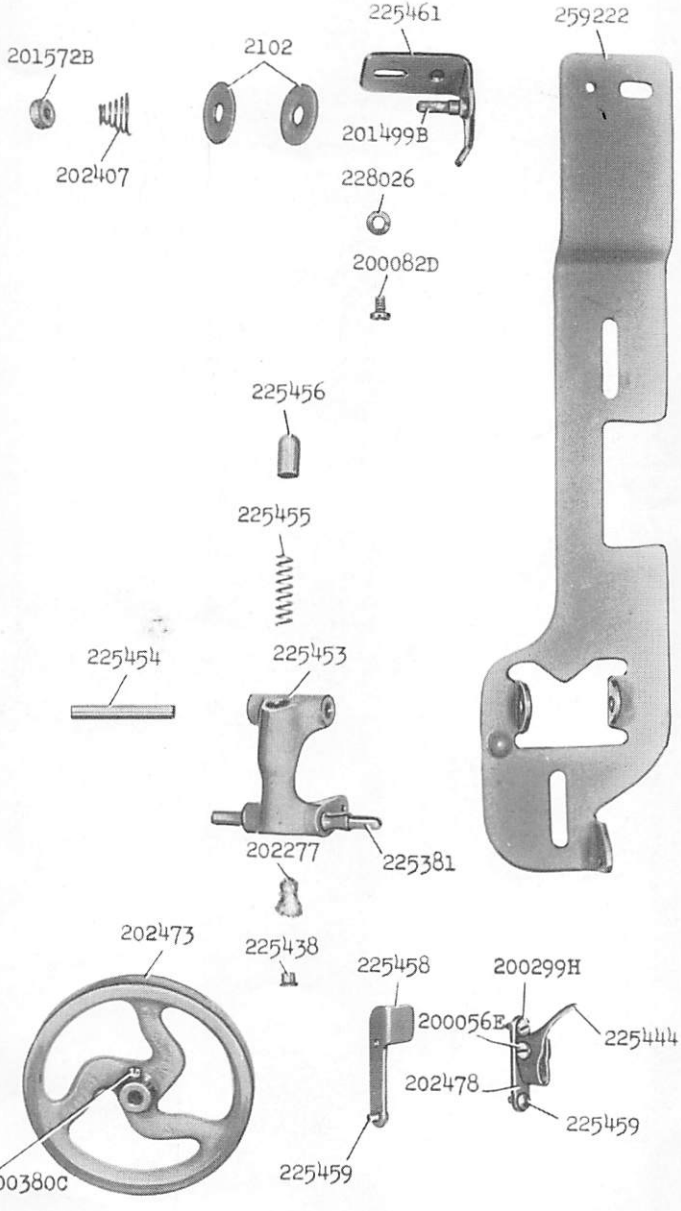

From the library of: Superior Sewing Machine & Supply LLC

259317

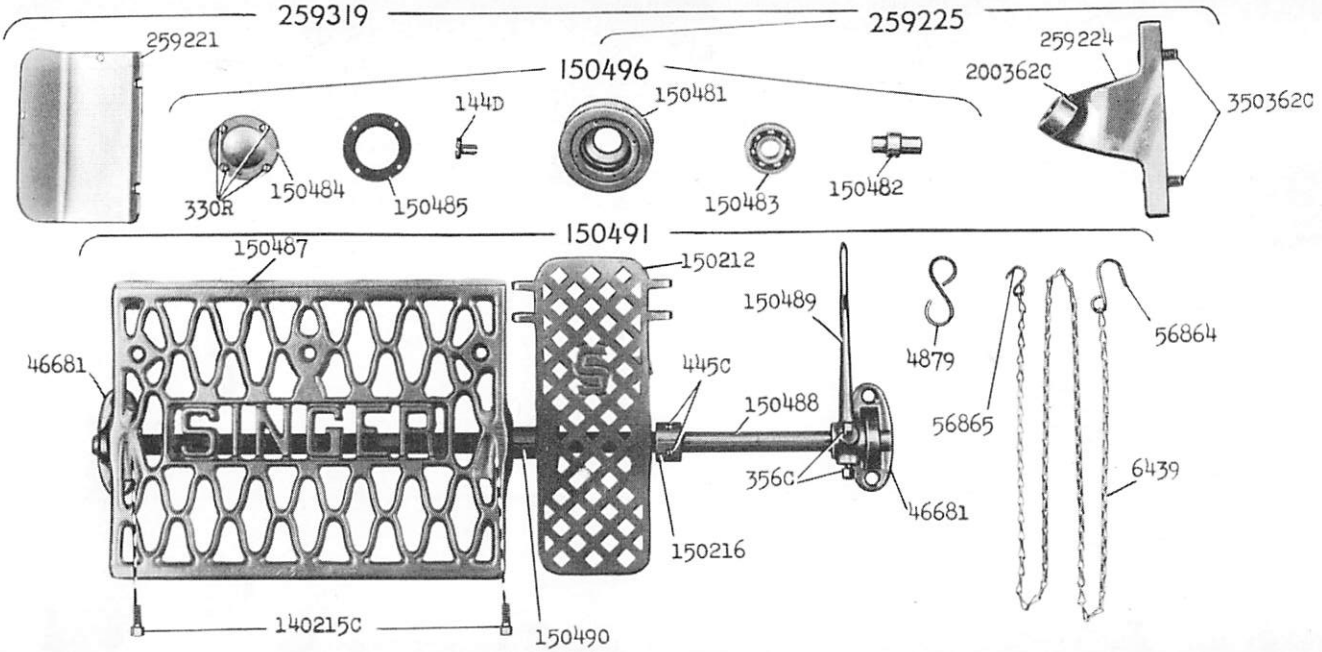

From the library of: Superior Sewing Machine & Supply LLC

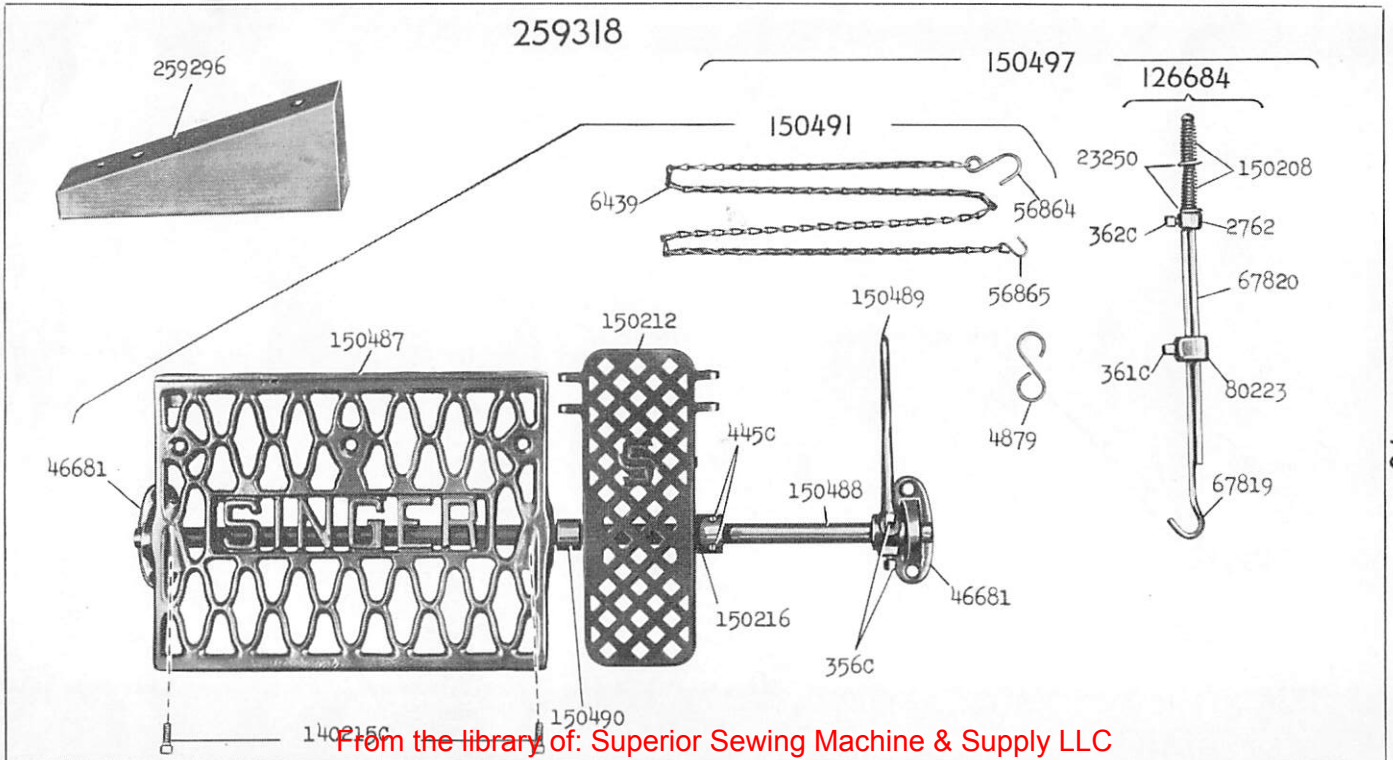

15852 - 1/6

From the library of: Superior Sewing Machine & Supply LLC

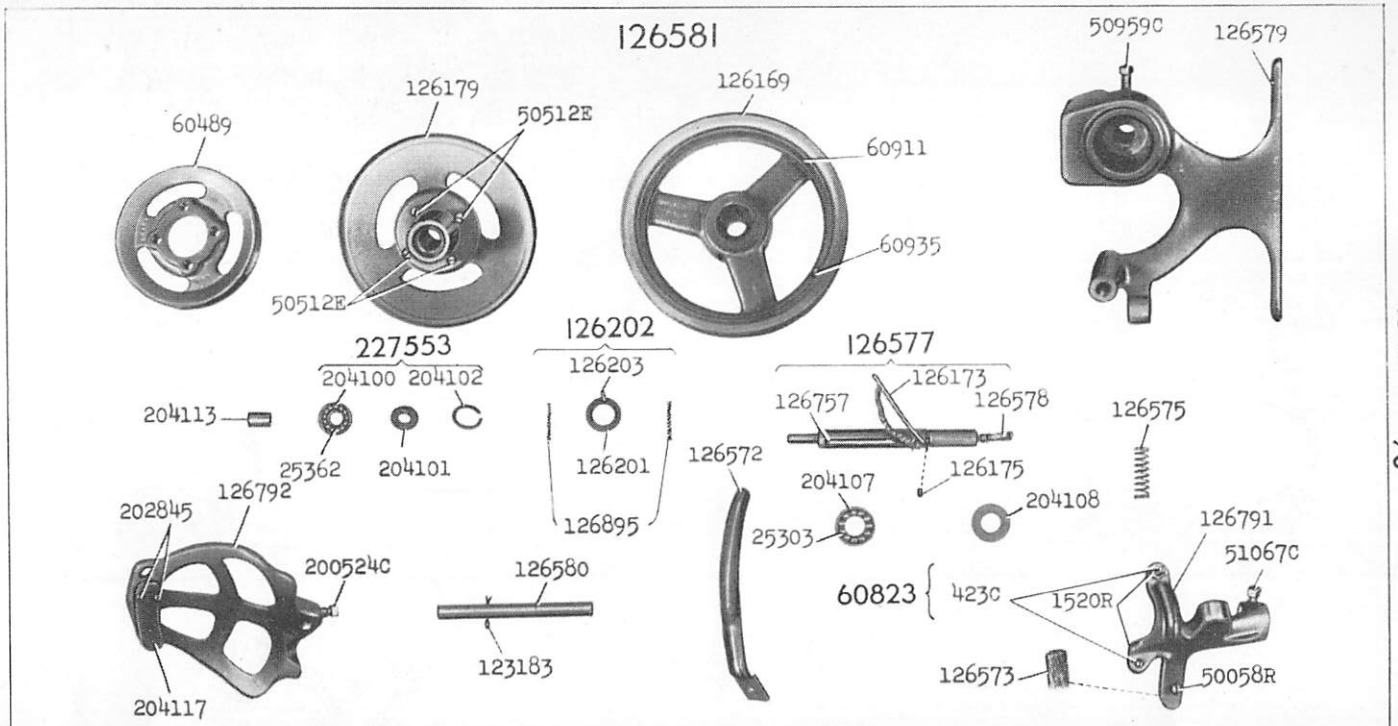

15853 - 1/6

From the library of: Superior Sewing Machine & Supply LLC

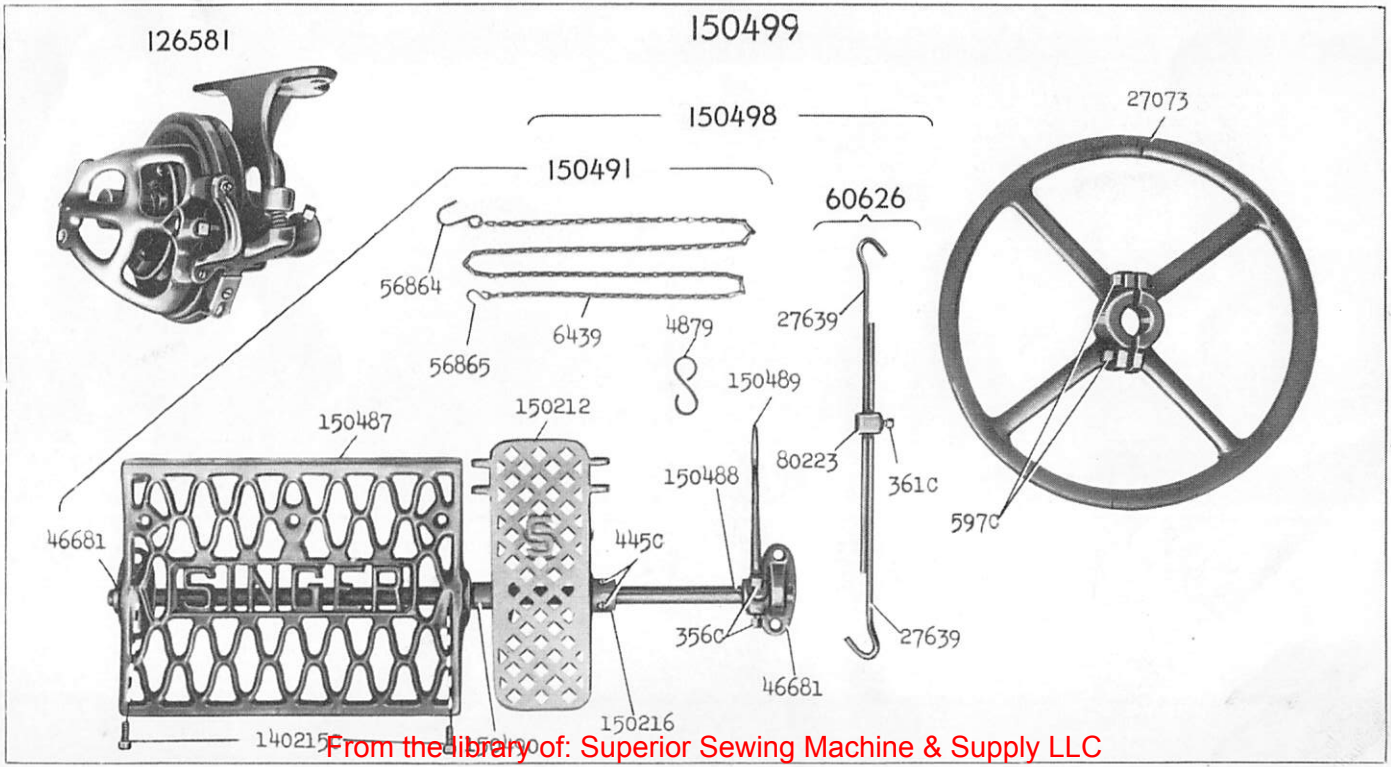

15854 - 1/7

From the library of: Superior Sewing Machine & Supply LLC

15855 - ¼

150532

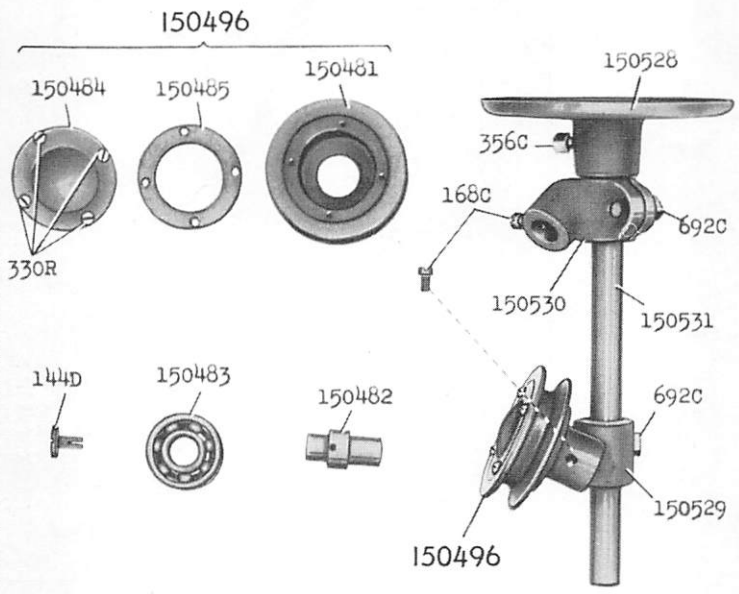

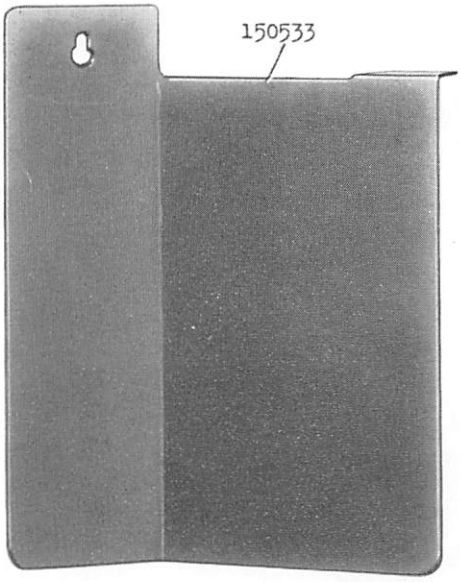

From the library of: Superior Sewing Machine & Supply LLC

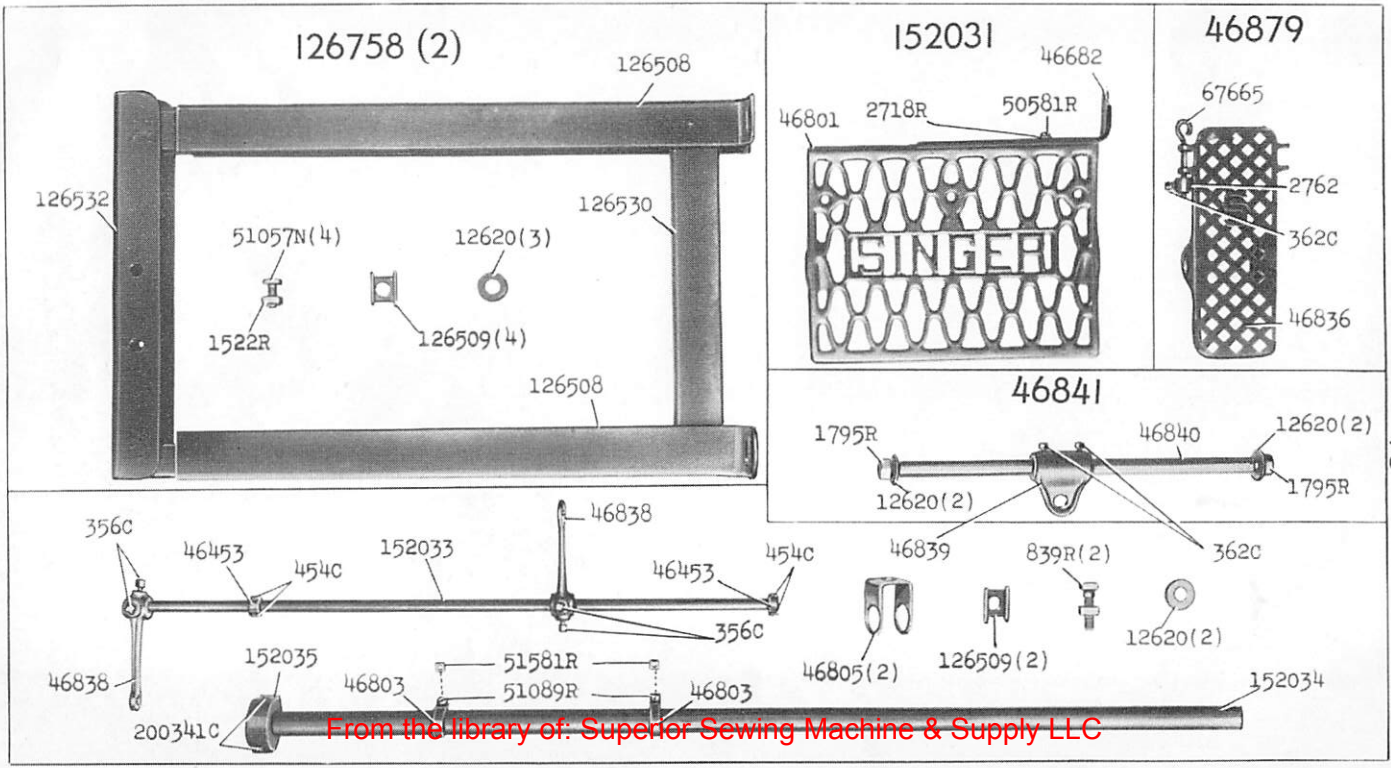

From the library of: Superior Sewing Machine & Supply LLC

15856 - 1/8

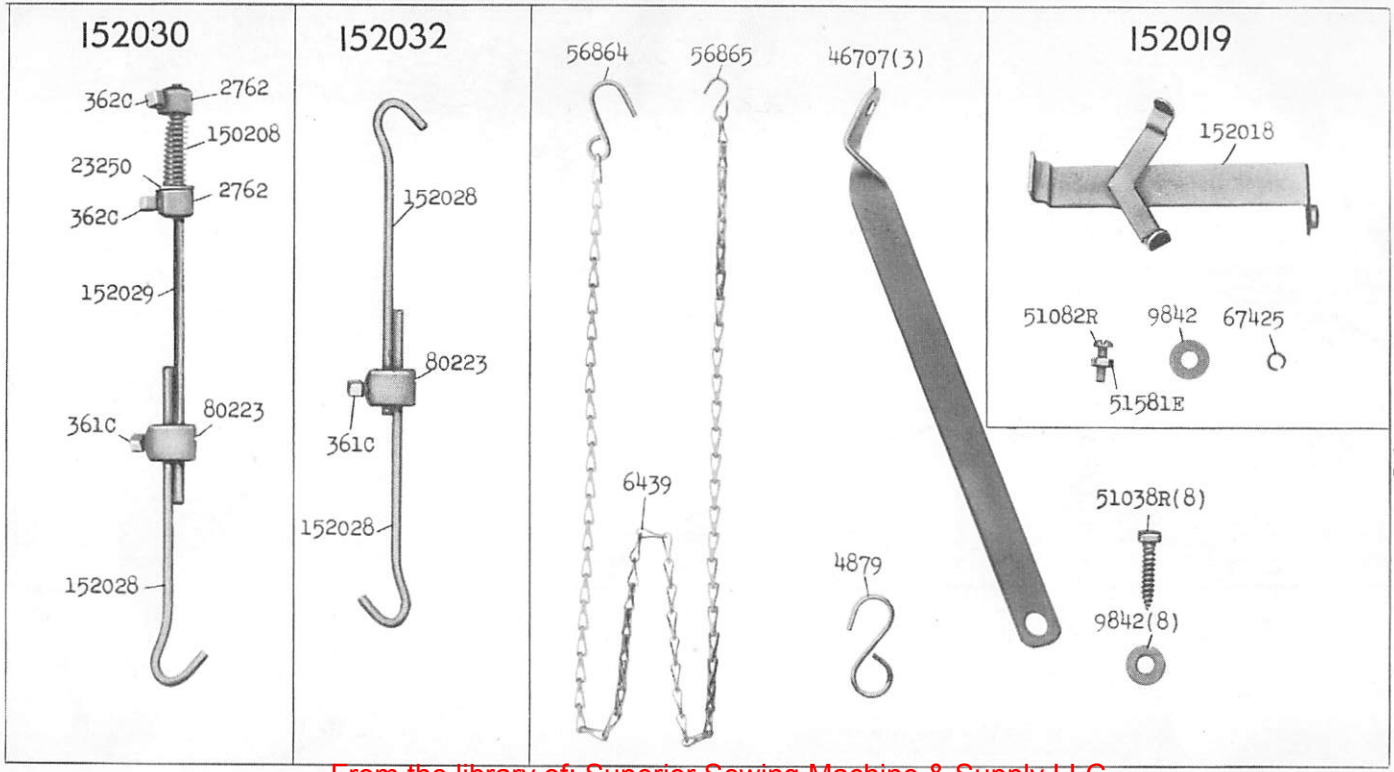

15857 - 1/4

From the library of: Superior Sewing Machine & Supply LLC

46922

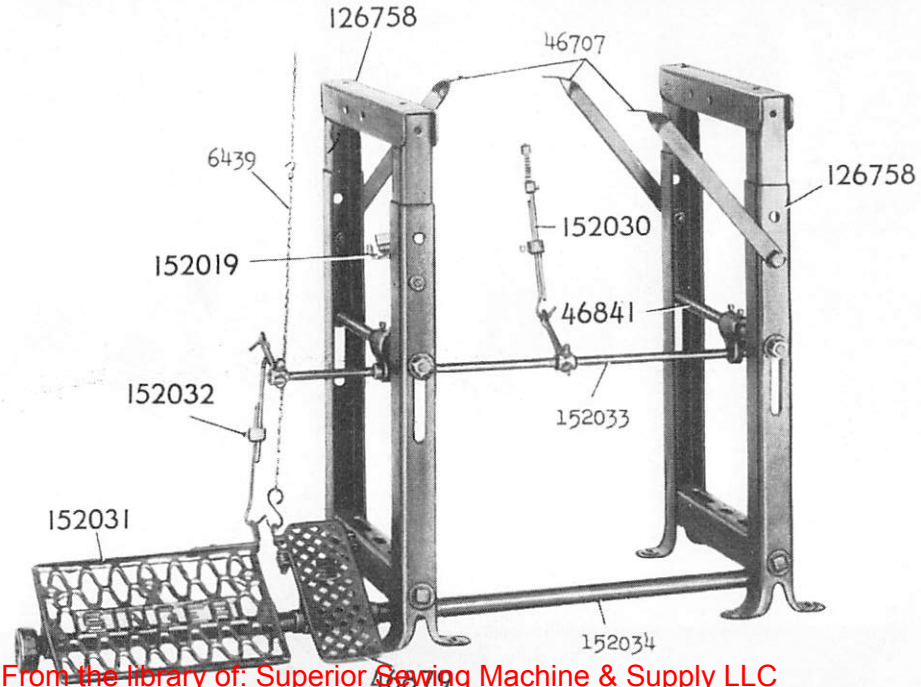

15858 - 1/10

From the library of: Superior Sewing Machine & Supply LLC

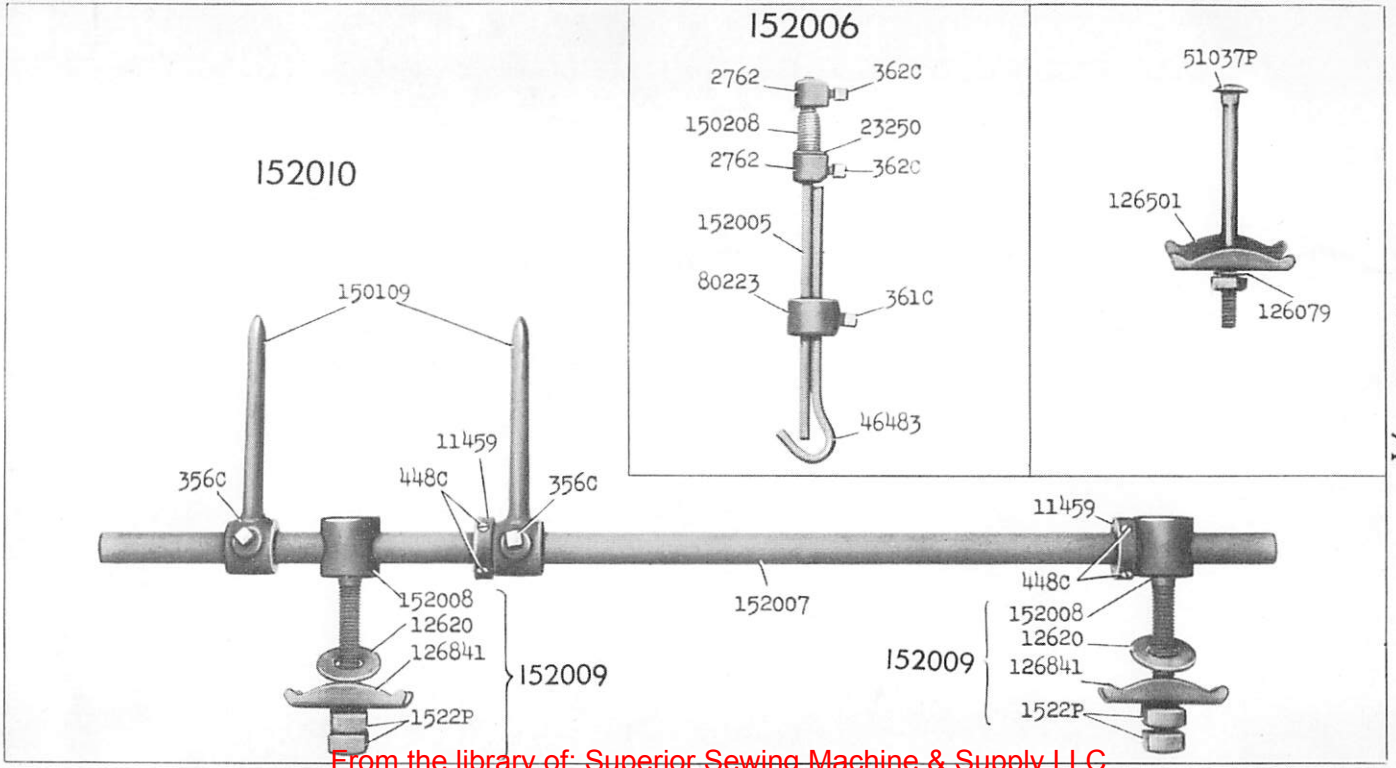

From the library of: Superior Sewing Machine & Supply LLC

46921

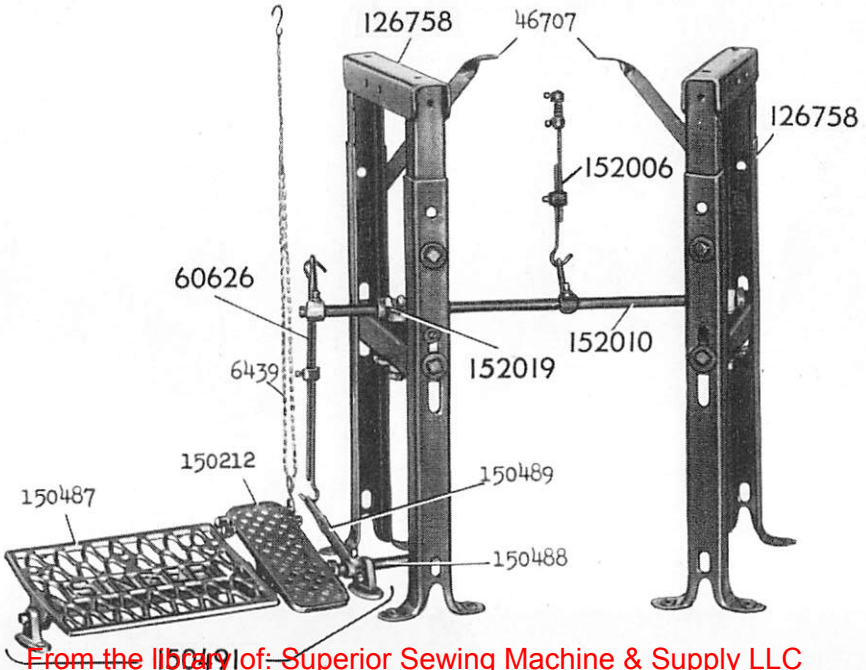

From the library of: Superior Sewing Machine & Supply LLC

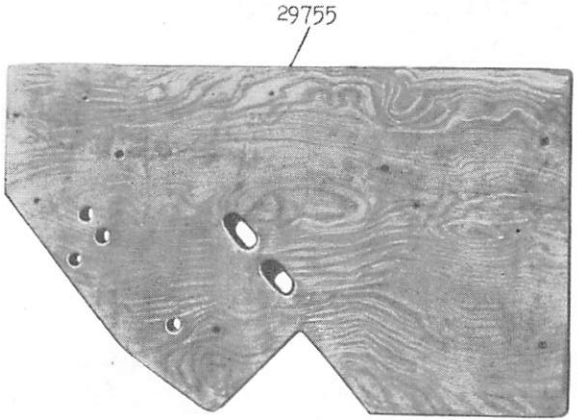

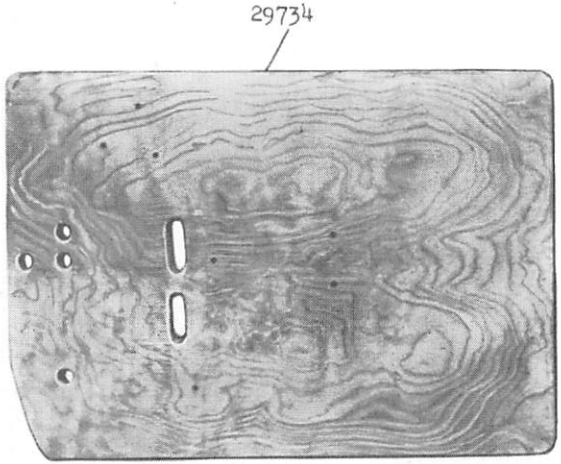

15873 - 1/10

From the library of: Superior Sewing Machine & Supply LLC

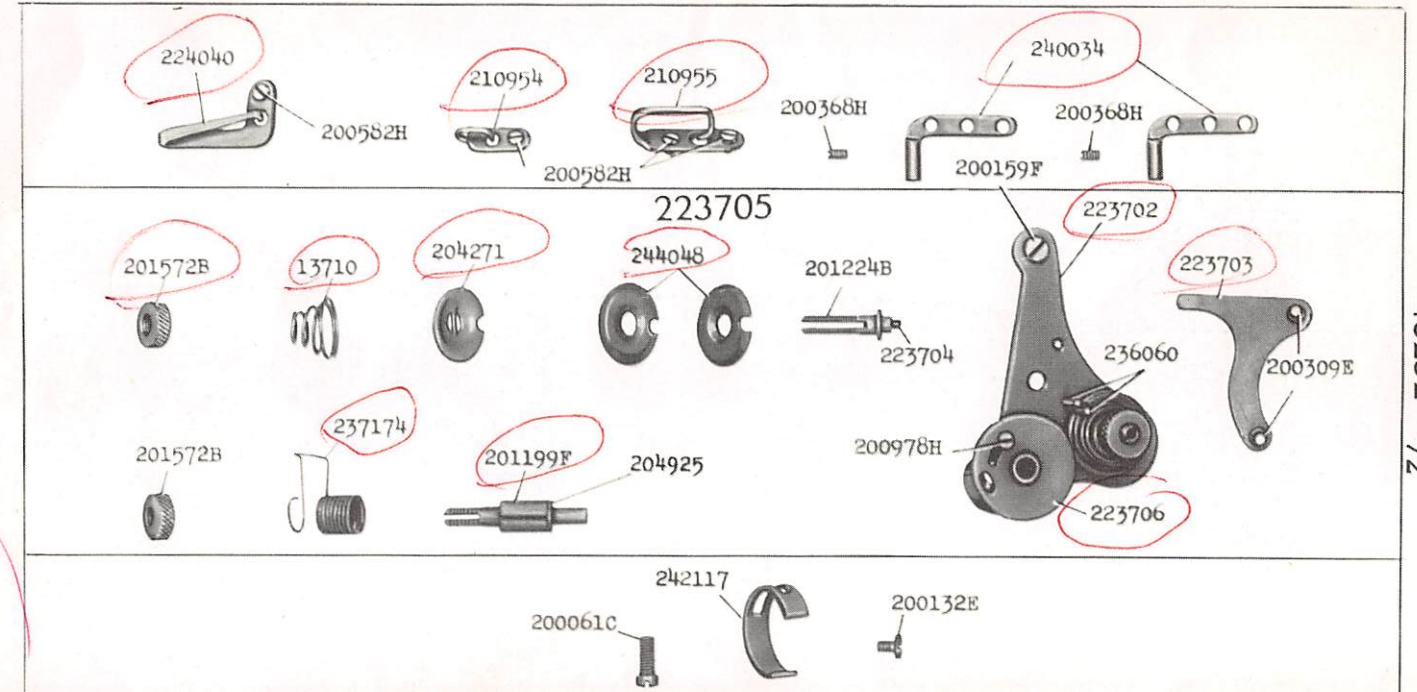

16252 - 1/2

From the library of: Superior Sewing Machine & Supply LLC

16257 - 1/6

259143

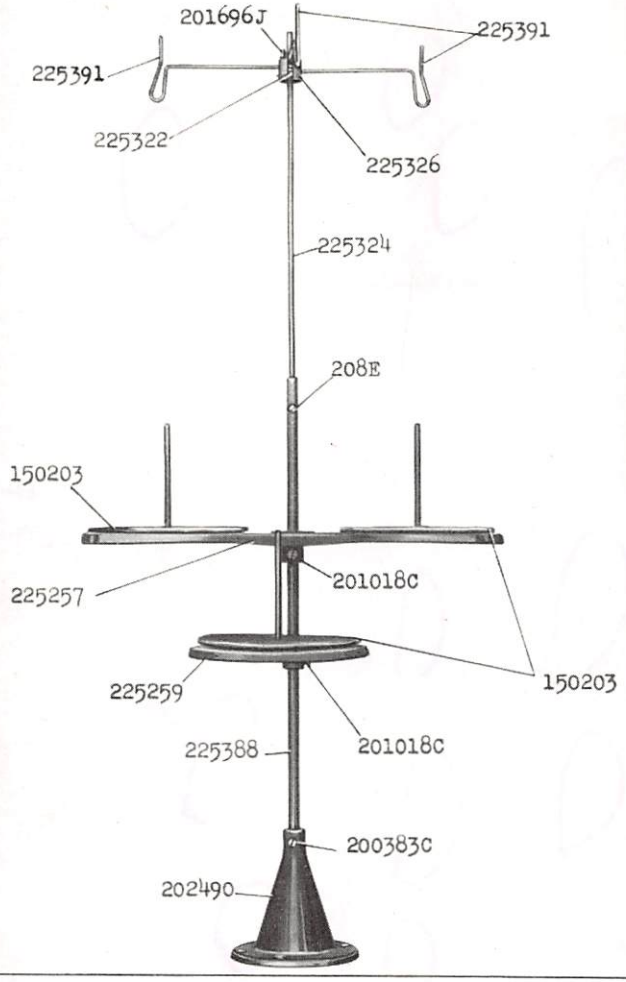

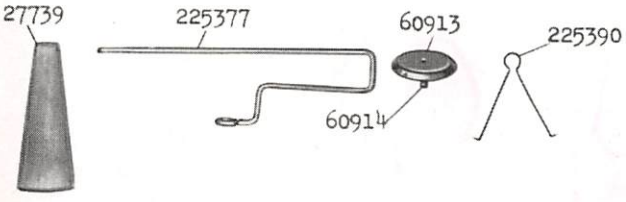

From the library of: Superior Sewing Machine & Supply LLC

From the library of: Superior Sewing Machine & Supply LLC