Form 21004
(159)
Printed in U. S. A.

LIST
OF
PARTS

SINGER SEWING MACHINES **

SINGER**

MACHINE No. 147-120

THE SINGER MANUFACTURING COMPANY

** A Trademark of THE SINGER MANUFACTURING COMPANY

From the library of: Superior Sewing Machine & Supply LLC

INSTRUCTIONS FOR OILING

To ensure easy running and prevent unnecessary wear of the parts which are in movable contact, the machine requires oiling and when in continuous use, "TYPE B" or "TYPE D" OIL, sold by Singer Sewing Machine Company, should be applied at least twice each day to all oil holes marked "OIL," as instructed in Form 20534

"TYPE D" OIL should be used when an oil is desired which will produce a minimum of stain on fabrics, even after a long period of storage.

SPECIAL NOTICE

The letter "O," marked on oil pipe couplings must always be on the top. This is to insure that the oil spoon, attached to the inner end of each coupling, is open side up.

Copyright © 1959 by The Singer Manufacturing Company

INDEX

Page

Accessories 26
Belt Guard 26
Bench Stand 26
Fittings 19
Foot Lifter Parts 27
Knee Lifter Parts 27
Machine Base 28
Machine Base Oil Drain Jar 28
Machine No. 147-120 7
Numerical List of Parts 31
Thread Unwinder 28

From the library of: Superior Sewing Machine & Supply LLC

INSTRUCTIONS FOR ORDERING

In ordering from this list, use ONLY the part NUMBER in the FIRST column.

The number stamped on a Sewing Machine Part is in every case the number of the single part only.

Every combination of parts sent out as such has its specific number, which, although not stamped on the parts, must be used when ordering the combination.

Each number always indicates the SAME PART in whatever list it appears, or for whatever machine.

The letters after some of the numbers indicate the style of finish only, as follows:

A—Hardened, Polished, Nickel Plated and Buffed
B—Polished, Nickel Plated and Buffed
C—Hardened Only
D—Polished Only
E—Soft, Not Polished
F—Hardened and Polished
G—Bright Rumbled and Nickel Plated
H—Blued
J—Nickel Plated Only
K—Hardened and Nickel Plated
L—Brass Plated
M—Oxidized
R—Phosphate Coating Formed on Surface of Iron or Steel
S—Cadmium Plated
T—Copper Plated
U—Zinc Plated
V—Silver Plated
W—Polished and Nickel Plated
X—Black Oxide for Iron and Steel
Y—Black Nickel Plated Only
Z—Chromium Plated
A.A—Buffed and Chromium Plated
A.B—Hardened, Polished, Buffed and Chromium Plated
A.E—Hardened, Bright Rumbled and Nickel Plated
A.F—Hardened, Bright Rumbled, Nickel Plated, Bright Rumbled and Chromium Plated
A.G—Alumilite (Plain)
A.H—Alumilite (Dyed) Color Must be Stated
A.J—Polished, Nickel Plated and Chromium Plated
A.K—Hardened, Polished, Nickel Plated and Chromium Plated
A.L—Heat Treated for Toughness
A.L.D—Heat Treated for Toughness and Polished
A.L.X—Heat Treated for Toughness and Black Oxide

INSTRUCTIONS FOR ORDERING

A.S—Black Moulded Phenolic
A.T—Beige Moulded Phenolic
A.U—Brown Moulded Phenolic
A.W—Hardened then Flame Coated with Tungsten Carbide
B.A—Chrome Nickel Satin Finish
B.B—Hardened and Chrome Nickel, Satin Finished
C.R—Hardened and Phosphate Coating Formed on Surface of Steel
F.J—Hardened, Polished and Nickel Plated
T.A—Hardened, Polished, Copper and Nickel Plated and Buffed
T.B—Copper and Nickel Plated and Polished
T.J—Copper and Nickel Plated Only
T.K—Hardened, Copper and Nickel Plated
T.L—Copper and Brass Plated
T.M—Copper Plated and Oxidized
X.C—Hardened and Black Oxide for Iron and Steel
Z.A—Hardened, Polished Nickel Plated, Buffed and Chromium Plated
Z.B—Polished, Nickel Plated, Buffed and Chromium Plated
Z.C—Hardened and Chromium Plated
Z.D—Polished and Chromium Plated
Z.G—Bright Rumbled, Nickel Plated, Bright Rumbled and Chromium Plated
Z.J—Nickel and Chromium Plated
Z.T—Copper and Chromium Plated

These letters MUST BE USED when they appear in the list; and AFTER the number as in the list.

In this series:

1 to 1500, 50001 to 51500 and 140001 to 142,000 are screw numbers
1501 to 1800 and 51500 to 51800 are nut numbers
1801 to 2000 and 51801 to 52000 are roller numbers
2001 to 50000 and 52001 to 140000 and 142001 to 190000 are Sewing Machine Parts, 190001 and upward are numbers of Electrical Parts.

The figures in the second column refer only to the plates, illustrating the parts, and are NOT TO BE USED in ordering.

Parts marked with an asterisk (*) are furnished only when repairs are made at the factory.

When ordering parts which differ as to gauge (the distance between seams), the gauge as well as the number must be given on the order.

From the library of: Superior Sewing Machine & Supply LLC

LIST OF PARTS COMPLETE

FOR

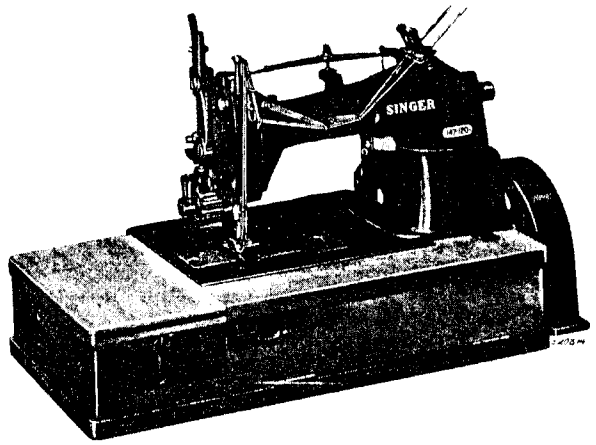

MACHINE No. 147-120

FOR SEWING LIGHT AND MEDIUM WEIGHT FABRICS, TWO NEEDLES, TWO LOOPERS. GAUGES 3/32" TO 1/2" IN STEPS OF 1/32". PULLER FEED. NEEDLE BAR STROKE 1-7/32". LENGTH OF STITCH 5 TO 25 TO THE INCH. SPEED 3800, DEPENDING ON MATERIALS USED AND OPERATIONS PERFORMED.

No.	Plate	Name
*131975	-----	Arm, upper and lower (solid) with 51422J, 68483 and four 131022
68428	24514	Arm Bottom Cover
68429	24514	Arm Bottom Cover Gasket (cork)
1057AL	24514	Arm Bottom Cover Screw (4)
50608R	24514	Arm Hole Plug Screw, for access to Crank Connecting Rod (upper bearing)
139017	24514	Arm Hole Plug Screw Washer
68350	24488	Arm Oil Cup, for oiling Arm Rock Shaft Front Bearing
131864	24489	Arm Oil Cup
131865	24489	Arm Oil Cup Oil Gauge complete
131866	24489	Arm Oil Cup with Oil Gauge complete, for filling oil reservoir, Nos. 131864 and 131865
131319	24488	Arm Oil Cup Oil Pad for 68350
131293	24488	Arm Rock Shaft
131474	-----	Arm Rock Shaft 131293 with 1235F, 127838 and 131475
1309C	24488	Arm Rock Shaft Adjusting Screw
131056	24488	Arm Rock Shaft Adjusting Screw Washer

From the library of: Superior Sewing Machine & Supply LLC

No.	Plate	Name
68433	24488	Arm Rock Shaft Bushing (back)
68435	24488	Arm Rock Shaft Bushing (back) Cap
131095	24488	Arm Rock Shaft Bushing (back) Cap Washer (fiber)
446AL	24488	Arm Rock Shaft Bushing (back) Set Screw
68436	24488	Arm Rock Shaft Bushing (intermediate)
423AL	24488	Arm Rock Shaft Bushing (intermediate) Set Screw
131072	24489	Arm Rock Shaft Crank, back (ball bearing, solid) with two 51407AL
51407AL	24489	Arm Rock Shaft Crank (back) Set Screw (2).
*131475	-----	Arm Rock Shaft Crank (front) with 853AL
127838	24488	Arm Rock Shaft Crank (front) Pin
131456	24488	Arm Rock Shaft Flanged Bushing (front)
453AL	24488	Arm Rock Shaft Flanged Bushing (front) Set Screw
42365	24488	Arm Rock Shaft Oil Pad for oiling Back Bearing
54969	24488	Arm Rock Shaft Oil Pad for oiling Intermediate Bearing
1235F	24488	Arm Rock Shaft Oil Plug Screw
131476	24489	Arm Rotary Shaft
	NOTE:	When No. 131476 is required for repairs, the Looper Driving Shaft and Feed Lifting Eccentric must be returned to the factory to be adjusted to the new part.
147516	-----	Arm Rotary Shaft 131476 with 640E, 131111, 131502, 131930 and 147501
131366	24489	Arm Rotary Shaft Ball Bearing (back) (2)
131478	24489	Arm Rotary Shaft Ball Bearing (back) Case.
131479	-----	Arm Rotary Shaft Ball Bearing (back) Case 131478 with 131369 and three 205C
131526	-----	Arm Rotary Shaft Ball Bearing (back) Case with Ball Bearings complete, Nos. 131479, 131480 and two 131366
131369	24489	Arm Rotary Shaft Ball Bearing (back) Case Cap
205C	24489	Arm Rotary Shaft Ball Bearing (back) Case Cap Screw (3)
131370	24489	Arm Rotary Shaft Ball Bearing (back) Case Position Stud (3)
429C	24489	Arm Rotary Shaft Ball Bearing (back) Case Set Screw
131480	24489	Arm Rotary Shaft Ball Bearing (back) Spacing Collar
131366	24489	Arm Rotary Shaft Ball Bearing (intermediate)
131481	24489	Arm Rotary Shaft Ball Bearing (intermediate) Case
1304C	24489	Arm Rotary Shaft Ball Bearing (intermediate) Case Set Screw
131482	24489	Arm Rotary Shaft Ball Bearing (intermediate) Collar with two 457AL
457AL	24489	Arm Rotary Shaft Ball Bearing (intermediate) Collar Set Screw (2)

No.	Plate	Name
131457	24489	Arm Rotary Shaft Bushing (front)
761E	24489	Arm Rotary Shaft Bushing (front) Set Screw.
42367	24489	Arm Rotary Shaft Front Bearing Oil Pad (lower)
54218	24489	Arm Rotary Shaft Front Bearing Oil Pad (upper)
144D	24489	Arm Rotary Shaft Screw
131276	24514	Arm Side Cover (oil vent)
131909	24514	Arm Side Cover Cap
131280	24514	Arm Side Cover Cap Position Pin
1289X	24514	Arm Side Cover Cap Screw
131910	24514	Arm Side Cover Cap Spring
131911	24514	Arm Side Cover (oil vent) complete, Nos. 1289X, 131276, 131280, 131909 and 131910.
68448	24514	Arm Side Cover Gasket (victorite)
1057AL	24514	Arm Side Cover Screw (4)
131980	24491	Cloth Plate with 59632
147519	24492	Cloth Plate Extension
1011F	24492	Cloth Plate Extension Screw (2)
131982	24492	Cloth Plate Extension Supporting Bracket
50473F	24492	Cloth Plate Extension Supporting Bracket Screw (lower)
50473F	24492	Cloth Plate Extension Supporting Bracket Screw (upper)
1708J	24492	Cloth Plate Extension Supporting Bracket Screw (upper) Nut
59632	24491	Cloth Plate Oil Tube
68368	24491	Cloth Plate Slide (left)
131050	24491	Cloth Plate Slide (left) Spring
665J	24491	Cloth Plate Slide (left) Spring Screw (2)
131051	24491	Cloth Plate Slide (left) complete, Nos. 68368, 131050 and two 665J
131376	24491	Cloth Plate Slide (right) 1/16 in. Throat Plate clearance cut, for 131383
131377	-----	Cloth Plate Slide (right) 7/64 in. Throat Plate clearance cut, for 131384
131381	24491	Cloth Plate Slide (right) Spring
665J	24491	Cloth Plate Slide (right) Spring Screw (2)
131383	24491	Cloth Plate Slide (right) complete (1/16 in. Throat Plate clearance cut) for 131988, Nos. 131376, 131381 and two 665J
131384	-----	Cloth Plate Slide (right) complete (7/64 in. Throat Plate clearance cut) for 131989, Nos. 131377, 131381 and two 665J
131988	-----	Cloth Plate complete, for Throat Plate with 1/16 in. offset, Nos. 131051, 131383 and 131980
131989	-----	Cloth Plate complete, for Throat Plate with 7/64 in. offset, Nos. 131051, 131384 and 131980
1011F	24491	Cloth Plate Screw (left) (2)
50396F	24491	Cloth Plate Screw (right)
131992	24491	Cloth Plate Thread Guard
389F	24491	Cloth Plate Thread Guard Screw (lower)
50473F	24491	Cloth Plate Thread Guard Screw (upper)

From the library of: Superior Sewing Machine & Supply LLC

No.	Plate	Name
131926	24489	Crank Connecting Rod with two each 1057AL 51751AL, 131927 and 131928.....
	NOTE:	When No. 131926 is required for repairs, Connecting Rod and Arm Rock Shaft Crank (back) fitted together will be furnished. All Agency orders for this part must state the Machine Number for which it is required, in order to obtain correct Needle Bar Stroke.
131930	-----	Crank Connecting Rod 131926 with 131072 ..
131927	24489	Crank Connecting Rod Cap (lower) Screw Stud (2).....
51715AL	24489	Crank Connecting Rod Cap (lower) Screw Stud Nut (2).....
131928	24489	Crank Connecting Rod Cap (lower) Screw Stud Nut Lock Washer (2).....
1057AL	24489	Crank Connecting Rod Cap (upper) Screw (2).....
134256	24490	Face Plate (lower half).....
134257	24490	Face Plate (lower half) Gasket (cork).....
330J	24490	Face Plate (lower half) Screw (2).....
131395	24490	Face Plate (upper half).....
29234	24490	Face Plate (upper half) Position Plate .....
1053E	24490	Face Plate (upper half) Position Plate Screw
51224W	24490	Face Plate (upper half) Thumb Screw.....
131941	24493	Feed Bar .....
131730	24493	Feed Bar Feed Dog Seat (adjustable) with 460AL .....
190J	24493	Feed Bar Feed Dog Seat Screw.....
22436	24493	Feed Bar Feed Dog Seat Screw Washer.....
131942	-----	Feed Bar with Feed Dog Leveling Device complete, Nos. 190J, 22436, 68467, 131730, 131941 and two 207E .....
131197	24493	Feed Bar Hinge Pin (eccentric) .....
59343	24493	Feed Bar Hinge Pin Collar with 735AL.....
735AL	24493	Feed Bar Hinge Pin Collar Set Screw .....
131943	24493	Feed Bar Slide Block.....
131944	24493	Feed Bar Slide Block 131943 with 68495 and 134260.....
68495	24493	Feed Bar Slide Block Oil Pad (wick).....
134260	24493	Feed Bar Slide Block Oil Pad Retainer.....
68467	24493	Feed Bar Wearing Plate.....
207E	24493	Feed Bar Wearing Plate Screw (2).....
131500	24489	Feed Connecting Rod with 1057AL, 68497, 134260 and two 896AL.....
131502	-----	Feed Connecting Rod 131500 with 54025 ....
896AL	24489	Feed Connecting Rod Cap Screw (2).....
1057AL	24489	Feed Connecting Rod Clamping Screw.....
68497	24489	Feed Connecting Rod Oil Pad (wick) .....
134260	24489	Feed Connecting Rod Oil Pad Retainer .....

Feed Dog (See Fittings Pages 19 to 26)

50073J	24498	Feed Dog Screw, when stationary Needle Guard is used .....
140275J	24498	Feed Dog Screw, when movable Needle Guard is used .....

No.	Plate	Name
460AL	24493	Feed Dog Stop Screw.....
51061AL	24489	Feed Eccentric Body Set Screw (3) .....
7071	24489	Feed Eccentric Clamping Washer (2) .....
217J	24489	Feed Eccentric Clamping Washer Screw (2)
138306	-----	Feed Eccentric Lubricating Pad (wood)....
54025	-----	Feed Eccentric (adjustable) complete, Nos. 1103C, 138306, two each 217J, 7071 and three 51061AL .....
1103C	24489	Feed Regulating Screw.....
131240	24493	Feed Rocking Frame with two 453AL .....
131945	-----	Feed Rocking Frame 131240 with 59343, 131197 and 131942.....
57234	24493	Feed Rocking Frame Hinge Pin .....
57235	24493	Feed Rocking Frame Hinge Pin Bushing (2).
453AL	24493	Feed Rocking Frame Hinge Pin Bushing Set Screw (2).....
453AL	24493	Feed Rocking Frame Hinge Pin Set Screw (2).....
131728	-----	Feed Roll (soft rubber) 1-1/4 in. wide, with two 140279AL.....
131979	-----	Feed Roll (soft rubber) 1-1/2 in. wide, with two 140279AL.....
131994	-----	Feed Roll (soft rubber) 1-1/8 in. wide, with two 140279AL.....
54457	24495	Feed Roll (lower) 1-1/4 in. wide with two 140279AL.....
68058	-----	Feed Roll (lower) 1-1/4 in. wide with two 140279AL .....
131993	-----	Feed Roll (lower, soft rubber) 2 in. wide with two 140279AL.....
131712	24495	Feed Roll (lower) Clutch (brake).....
131713	-----	Feed Roll (lower) Clutch (brake) 131712 with three 131726.....
949J	24495	Feed Roll (lower) Clutch (brake) Clamping Screw.....
131714	24495	Feed Roll (lower) Clutch (drive).....
131715	-----	Feed Roll (lower) Clutch (drive) 131714 with three 131726.....
131716	24495	Feed Roll (lower) Clutch (drive) Connection with 1375AL and 1390C.....
1390C	24495	Feed Roll (lower) Clutch (drive) Connection Clamping Screw.....
1375AL	24495	Feed Roll (lower) Clutch (drive) Connection Set Screw.....
131717	24495	Feed Roll (lower) Clutch Roller (6) .....
68152	24495	Feed Roll (lower) Clutch Roller Plunger (6)
131718	24495	Feed Roll (lower) Clutch Roller Plunger Spring (6) .....
131995	24495	Feed Roll (lower) Clutch Shaft with 131723.
131996	-----	Feed Roll (lower) Clutch Shaft 131995 with 131727, 140267F and two 62562.....
131997	24495	Feed Roll (lower) Clutch Shaft Bracket with 949J.....
131998	-----	Feed Roll (lower) Clutch Shaft Bracket complete, Nos. 131996 and 131997 .....

From the library of: Superior Sewing Machine & Supply LLC

No.	Plate	Name
948D	24495	Feed Roll (lower) Clutch Shaft Bracket Screw (3)
62562	24495	Feed Roll (lower) Clutch Shaft Collar with two 465AL (2)
465AL	24495	Feed Roll (lower) Clutch Shaft Collar Set Screw (4)
140267F	24495	Feed Roll (lower) Clutch Shaft Oil Plug Screw
131723	-----	Feed Roll (lower) Clutch Shaft Oil Wick
147615	24495	Feed Roll (lower) Clutch Sleeve with two 140409C
140409C	24495	Feed Roll (lower) Clutch Sleeve Set Screw (2)
131725	24495	Feed Roll (lower) Clutch Washer (2)
131726	24495	Feed Roll (lower) Clutch Wearing Plate (6)
131727	24495	Feed Roll (lower) Clutch complete, Nos. 131713, 131715, 131716, 147615, two 131725 and six each 68152, 131717 and 131718
131999	24489	Feed Roll (lower) Connecting Rod with 68497, 134260, and two 896AL
147501	-----	Feed Roll (lower) Connecting Rod 131999 with 54456
896AL	24489	Feed Roll (lower) Connecting Rod Cap Screw (2)
1257C	24489	Feed Roll (lower) Connecting Rod Hinge Screw
1620E	24489	Feed Roll (lower) Connecting Rod Hinge Screw Nut
68497	24489	Feed Roll (lower) Connecting Rod Oil Pad (wick)
134260	24489	Feed Roll (lower) Connecting Rod Oil Pad Retainer
51061AL	24489	Feed Roll (lower) Eccentric Body Set Screw (3)
7071	24489	Feed Roll (lower) Eccentric Clamping Washer (2)
217J	24489	Feed Roll (lower) Eccentric Clamping Washer Screw (2)
54456	-----	Feed Roll (lower) Eccentric Adjustable complete, Nos. 1103C, two each 217J, 7071 and three 51061AL
1103C	24489	Feed Roll (lower) Eccentric Regulating Screw
140279AL	24495	Feed Roll (lower) Set Screw (2)
54481	24494	Feed Roll (upper) 1 in. wide, with two 140279AL
68059	-----	Feed Roll (upper) 1 in. wide, with two 140279AL
127534	24494	Feed Roll (upper) Bar
147502	24494	Feed Roll (upper) Bar Bracket with 453AL
147503	-----	Feed Roll (upper) Bar Bracket 147502 with 79C, 866D, 913W, 1330C, 1876, 23404, 38648, 54472, 54473, 127534, 127536, 127542, 147561 and two 208AL

No.	Plate	Name
147504	-----	Feed Roll (upper) Bar Bracket complete, Nos. 54475 and 147503
1193D	24494	Feed Roll (upper) Bar Bracket Screw (lower)
769C	24494	Feed Roll (upper) Bar Bracket Screw (upper)
127536	24494	Feed Roll (upper) Bar Collar with 448AL
1876	24494	Feed Roll (upper) Bar Collar Roller and Screw Stud
448AL	24494	Feed Roll (upper) Bar Collar Set Screw
23404	24494	Feed Roll (upper) Bar Spring
127538	24494	Feed Roll (upper) Bracket with 453AL, for Feed Rolls up to and including 1-1/4 in. wide
54475	-----	Feed Roll (upper) Bracket 127538 with 54457 and 127546
127542	24494	Feed Roll (upper) Bracket Guide Pin
453AL	24494	Feed Roll (upper) Bracket Guide Pin Set Screw
453AL	24494	Feed Roll (upper) Bracket Set Screw
147561	24494	Feed Roll (upper) Lifter
866D	24494	Feed Roll (upper) Lifter Hinge Screw
54472	24494	Feed Roll (upper) Lifter Latch
79C	24494	Feed Roll (upper) Lifter Latch Hinge Screw
38648	24494	Feed Roll (upper) Lifter Latch Spring
54473	-----	Feed Roll (upper) Lifter Latch Stop
208AL	24494	Feed Roll (upper) Lifter Latch Stop Screw (2)
1330C	24494	Feed Roll (upper) Lifter Stop Screw
913W	24494	Feed Roll (upper) Pressure Regulating Thumb Screw
140279AL	24494	Feed Roll (upper) Set Screw (2)
127546	24494	Feed Roll (upper) Shaft (2-9/16 in. long)
133251	-----	Feed Roll (upper) Spacing Collar
	NOTE:	When ordering No. 133251 state width required.
131458	24503	Looper (back) closed eye, for lap seam felling
131131	24498	Looper (back) Closed eye, for general work
	NOTE:	When ordering No. 131131 or 131458, state gauge of machine for which required.
452AL	20747	Looper (back) Set Screw
131459	24503	Looper (front) closed eye, for lap seam felling
131132	24498	Looper (front) closed eye, for general work
	NOTE:	When ordering No. 131132 or 131459, state gauge of machine for which required.
1120AL	20747	Looper (front) Set Screw
54027	20747	Looper Carrier with two 175E
175E	20747	Looper Carrier Adjusting Screw (2)
54227	20747	Looper Carrier Connection
54228	20747	Looper Carrier Connection Shaft

From the library of: Superior Sewing Machine & Supply LLC

No.	Plate	Name
128419	20747	Looper Carrier Connection Shaft Oil Pad (braided cotton)
68478	20747	Looper Carrier Connection Shaft Sleeve (eccentric)
51263D	20747	Looper Carrier Connection Shaft Sleeve Cap Screw
68479	20747	Looper Carrier Driver with four 175AL
175AL	20747	Looper Carrier Driver Cap Screw (4)
131958	20747	Looper Driving Shaft and Feed Lifting Eccentric
	NOTE:	When No. 131958 is required for repairs, the Arm Rotary Shaft must be returned to the factory to be adjusted to the new part.
131111	-----	Looper Driving Shaft and Feed Lifting Eccentric 131958 with 54027, 54227, 54228 and 68479
68483	-----	Looper Driving Shaft and Feed Lifting Eccentric Bracket with 761E
51422J	24489	Looper Driving Shaft and Feed Lifting Eccentric Bracket Screw
131959	20747	Looper Driving Shaft and Feed Lifting Eccentric Bushing
131028	20747	Looper Driving Shaft and Feed Lifting Eccentric Bushing Oil Plug
761E	24489	Looper Driving Shaft and Feed Lifting Eccentric Bushing Position Screw
68497	-----	Looper Driving Shaft and Feed Lifting Eccentric Front Bearing Oil Pad (wick)
640E	24489	Looper Driving Shaft and Feed Lifting Eccentric Screw
131052	20747	Looper Holder with 452AL and 1120AL
51119J	20747	Looper Holder Screw
68485	20747	Looper Throw-out Handle with two 443AL
68486	20747	Looper Throw-out Handle Plunger
43503	20747	Looper Throw-out Handle Plunger Spring
443AL	20747	Looper Throw-out Set Screw (2)
131914	24489	Machine Pulley (outside diam. of belt groove 2.9 in.) with two 51283AL, for "V" belt
51283AL	24489	Machine Pulley Set Screw (2)
131497	24490	Needle Bar (hollow)
131498	-----	Needle Bar complete, Nos. 131044 and 131497
	NOTE:	When ordering No. 131498, state gauge required.
131291	24490	Needle Bar Bushing (lower)
1133AL	24490	Needle Bar Bushing (lower) Set Screw
64320	24490	Needle Bar Bushing (upper)
1133AL	24490	Needle Bar Bushing (upper) Set Screw
68488	24490	Needle Bar Connecting Link and Thread (upper) Controller
131491	-----	Needle Bar Connecting Link and Thread (upper) Controller 68488 with 68489 and 131492
68489	24490	Needle Bar Connecting Link Hinge Stud (hollow)

No.	Plate	Name
1520J	24490	Needle Bar Connecting Link Hinge Stud Nut.
131270	24490	Needle Bar Connecting Link Hinge Stud Oil Pad (wick)
861C	24490	Needle Bar Connecting Link Hinge Stud Oil Plug Screw
853AL	24488	Needle Bar Connecting Link Hinge Stud Set Screw
131492	24490	Needle Bar Connecting Stud with 1492E
1492E	24490	Needle Bar Connecting Stud Clamping screw
131044	24490	Needle Clamp with two 1498AL
	NOTE:	When ordering No. 131044, state gauge required.
131174	24498	Needle Guard (movable) for 3/16 in. to 3/8 in. gauges
	NOTE:	When ordering No. 131174, state gauge required.
131121	24500	Needle Guard (movable) for 13/32 in. to 1/2 in. gauges
	NOTE:	When ordering No. 131121, state gauge required.
68123	24493	Needle Guard (movable) Clamp
54067	24498	Needle Guard (stationary) for 3/32 in. to 5/32 in. gauges
	NOTE:	When ordering No. 54067, state gauge required.
54068	24500	Needle Guard (stationary) for 5/16 in. to 3/8 in. gauges
	NOTE:	When ordering No. 54068, state gauge required.
131175	24500	Needle Guard (stationary) for 13/32 in. to 1/2 in. gauges
	NOTE:	When ordering No. 131175, state gauge required.
54038	24498	Needle Guard (stationary) Holder
176J	24498	Needle Guard (stationary) Holder Screw
217C	24498	Needle Guard (stationary) Screw
1498AL	24490	Needle Set Screw (2)
68492	24496	Oil Pipe (back of arm) with 68497, for oiling Feed Rocking Frame Hinge Pin Front Bearing
68493	24496	Oil Pipe (back of arm) Clamp
176E	24496	Oil Pipe (back of arm) Clamp Screw
68494	24496	Oil Pipe (back of arm) Connection with 68495 and two 198E, for oiling Feed Rocking Frame Hinge Pin Back Bearing
198E	24496	Oil Pipe (back of arm) Connection Cap Screw (2)
68495	24496	Oil Pipe (back of arm) Connection Oil Pad (wick)
68496	24496	Oil Pipe (back of arm) Coupling
1733	24496	Oil Pipe (back of arm) Coupling Nut (brass)
68497	24496	Oil Pipe (back of arm) Oil Pad (wick)
131637	24496	Oil Pipe (front of arm) with 131089 and two 1733 for oiling Looper Driving Shaft and Feed Lifting Eccentric Front Bearing

From the library of: Superior Sewing Machine & Supply LLC

No.	Plate	Name
131112	24496	Oil Pipe (front of arm) with 68497 and 131003, for oiling Feed Bar Slide Block..
68500	24496	Oil Pipe (front of arm) with 1733, 131084 and 131089, for oiling Arm Rotary Shaft Front Bearing .....
131113	24496	Oil Pipe (front of arm) with 68497 and 131003, for oiling Feed Connecting Rod..
131113	24496	Oil Pipe (front of arm) with 68497 and 131003, for oiling Feed Roll (lower) Connecting Rod.....
131638	-----	Oil Pipe (front of arm) complete, Nos. 68500, 131112, 131637 and two 131113 ....
131002	24496	Oil Pipe (front of arm) Connection with two 198E, for oiling Looper Throw-out Device .....
131003	24496	Oil Pipe (front of arm) Connection with two 198E, for 131112 and 131113 (3).....
131084	24496	Oil Pipe (front of arm) Connection with two 198E, for 68500 .....
198E	24496	Oil Pipe (front of arm) Connection Cap Screw (10).....
131004	24496	Oil Pipe (front of arm) Coupling (center) ..
131004	24496	Oil Pipe (front of arm) Coupling (left).....
131087	24496	Oil Pipe (front of arm) Coupling (right)....
1733	24496	Oil Pipe (front of arm) Coupling Nut (brass) (3) .....
131089	24496	Oil Pipe (front of arm) Oil Pad (wick) for 68500 and 131637 (2).....
68497	24496	Oil Pipe (front of arm) Oil Pad (wick) for 131112 and 131113 (3).....
131912	24490	Presser Bar (hollow).....
131006	24490	Presser Bar Bushing (lower).....
1133AL	24490	Presser Bar Bushing (lower) Set Screw....
38456	24490	Presser Bar Bushing (upper).....
1133AL	24490	Presser Bar Bushing (upper) Set Screw....
131401	24490	Presser Bar Lifting Bracket with 453AL...
11173	24490	Presser Bar Lifting Bracket Guide.....
453AL	24490	Presser Bar Lifting Bracket Guide Set Screw.....
453AL	24490	Presser Bar Lifting Bracket Set Screw ....
131402	20727	Presser Bar Lifting Lever .....
68184	20727	Presser Bar Lifting Lever Extension.....
161J	20727	Presser Bar Lifting Lever Extension Screw (2).....
802X	20727	Presser Bar Lifting Lever Hinge Screw....
131749	24514	Presser Bar Spring.....
131750	24514	Presser Bar Spring (auxiliary) complete...
131751	24514	Presser Bar Spring Screw Stud .....
1637J	24514	Presser Bar Spring Screw Stud Lock Nut...
38468	24514	Presser Bar Spring Stud .....
131830	24514	Presser Bar Spring complete, Nos. 1637J, 51697W, 131749, 131750, 131751 and 131752 .....

Presser Foot (hinged) Complete.
(See Fittings Pages 19 to 26)

No.	Plate	Name
190J	24498	Presser Foot Screw.....
51697W	24514	Pressure Regulating Thumb Nut.....
131752	24514	Pressure Regulating Thumb Nut Washer....
131403	24497	Slack Thread Regulator.....
131404	24497	Slack Thread Regulator Holder.....
131405	24497	Slack Thread Regulator Holder Crank with 171AL .....
1423J	24497	Slack Thread Regulator Holder Crank Cap Screw .....
171AL	24497	Slack Thread Regulator Holder Crank Clamping Screw .....
131406	24497	Slack Thread Regulator Holder Crank Connecting Link .....
217J	24497	Slack Thread Regulator Screw.....
131012	20727	Tension (under thread) Bracket .....
691F	20727	Tension (under thread) Bracket Screw (2)..
2102	20727	Tension (under thread) Disc (4) .....
51570C	20727	Tension (under thread) Regulating Thumb Nut (2) .....
50326C	20727	Tension (under thread) Screw Stud (2).....
59539	-----	Tension (under thread) Screw Stud 50326C with 51570C (2).....
131740	20727	Tension (under thread) Spring (2).....
59537	20727	Tension (under thread) Spring Bushing (large) (2) .....
59538	20727	Tension (under thread) Spring Bushing (small) (2).....
131696	20727	Tension (under thread) Thread Guide (double) (2) .....
54070	20727	Tension (upper thread) Bracket .....
140443J	20727	Tension (upper thread) Bracket Screw .....
2102	20727	Tension (upper thread) Disc (4) .....
51570C	20727	Tension (upper thread) Regulating Thumb Nut (2).....
32572	20727	Tension (upper thread) Releasing Disc (2)..
54988	20727	Tension (upper thread) Releasing Pin (2)...
54071	20727	Tension (upper thread) Releasing Shaft.....
54047	20727	Tension (upper thread) Releasing Shaft Crank with 624AL.....
54048	20727	Tension (upper thread) Releasing Shaft Crank Link.....
624AL	20727	Tension (upper thread) Releasing Shaft Crank Set Screw.....
68261	20727	Tension (upper thread) Releasing Shaft Spring.....
131011	20727	Tension (upper thread) Releasing Shaft Spring Position Plate.....
316C	20727	Tension (upper thread) Releasing Shaft Stop Screw .....
1547J	20727	Tension (upper thread) Releasing Shaft Stop Screw Nut .....
50326C	20727	Tension (upper thread) Screw Stud (2) .....

From the library of: Superior Sewing Machine & Supply LLC

No.	Plate	Name
59539	-----	Tension (upper thread) Screw Stud 50326C with 51570C (2)
131741	20727	Tension (upper thread) Spring (2)
59537	20727	Tension (upper thread) Spring Bushing (large) (2)
59538	20727	Tension (upper thread) Spring Bushing (small) (2)
131696	20727	Tension (upper thread) Thread Guide (double) (2)
53225	20727	Thread (under) Eyelet (back)
190J	20727	Thread (under) Eyelet (back) Screw
131407	24489	Thread (under) Take-up with 1258AL
131408	20728	Thread (under) Take-up Oil Guard
50438J	20728	Thread (under) Take-up Oil Guard Screw
1258AL	24489	Thread (under) Take-up Set Screw
131824	20728	Thread (under) Take-up Stripper
54242	20728	Thread (under) Take-up Stripper Clamp
190J	20728	Thread (under) Take-up Stripper Clamp Screw
131825	20728	Thread (under) Take-up Stripper Plate
131411	20728	Thread (under) Take-up Stripper Plate Bracket
131934	20728	Thread (under) Take-up Stripper Plate Bracket 131411 with 32062, 50438J, 54242, 131408, 131413, 131414, 131415, 131824, 131825, two each 207J, 7071, 50470J and four 190J
965D	20728	Thread (under) Take-up Stripper Plate Bracket Screw
190J	20728	Thread (under) Take-up Stripper Plate Screw (3)
32062	20728	Thread (under) Take-up Stripper Washer
131413	20728	Thread (under) Take-up Thread Guard (fiber)
50470J	20728	Thread (under) Take-up Thread Guard Screw (2)
131414	20728	Thread (under) Take-up Thread Guide (left)
207J	20728	Thread (under) Take-up Thread Guide (left) Screw
7071	20728	Thread (under) Take-up Thread Guide (left) Screw Washer
131415	20728	Thread (under) Take-up Thread Guide (right)
207J	20728	Thread (under) Take-up Thread Guide (right) Screw
7071	20728	Thread (under) Take-up Thread Guide (right) Screw Washer
128721	20727	Thread (upper) Eyelet
190J	20727	Thread (upper) Eyelet Screw
131039	24497	Thread (upper) Nipper Hole Plug
1149AL	24497	Thread (upper) Nipper Hold Plug Position Screw
131499	24490	Thread (upper) Take-up with 223J
223J	24490	Thread (upper) Take-up Clamping Screw

No.	Plate	Name
131495	20727	Thread (upper) Take-up (auxiliary)
131496	20727	Thread (upper) Take-up (auxiliary) Clamp
997J	20727	Thread (upper) Take-up (auxiliary) Clamp Screw

Throat Plate (See Fittings Pages 19 to 26)

742F	24498	Throat Plate Screw (2)

FITTINGS

Fittings for Plain Work
3/32 in. to 1/4 in. gauges

NOTE: When ordering these Fittings, state gauge required.

No.	Plate	Name
131032	24498	Feed Dog, 17 teeth (16 teeth to the inch)
26276	24498	Presser Foot Hinge Pin
131164	24498	Presser Foot Plate
46087	24498	Presser Foot Shank
131165	24498	Presser Foot (hinged) complete, Nos. 26276, 46087 and 131164
26276	24498	Presser Foot Hinge Pin
147548	24498	Presser Foot Plate
147549	24498	Presser Foot Shank with 665J
665J	24498	Presser Foot Shank Adjusting Screw
147550	24498	Presser Foot Thread Cutter
239J	24498	Presser Foot Thread Cutter Screw
147551	24498	Presser Foot (hinged) complete with Thread Cutter, Nos. 239J, 26276, 147548, 147549 and 147550
131033	24498	Throat Plate

Fittings for Plain Work
5/32 in. to 11/32 in. gauges

NOTE: When ordering these Fittings, state gauge required.

No.	Plate	Name
131321	24499	Feed Dog, 16 teeth (16 teeth to the inch) with row of teeth between needles
131938	24499	Feed Dog, 14 teeth (14 teeth to the inch) with row of teeth between needles
26276	24499	Presser Foot Hinge Pin
131164	24499	Presser Foot Plate
46087	24499	Presser Foot Shank
131165	24499	Presser Foot (hinged) complete, Nos. 26276, 46087 and 131164

From the library of: Superior Sewing Machine & Supply LLC

No.	Plate	Name
26276	24499	Presser Foot Hinge Pin.....
147548	24499	Presser Foot Plate .....
147549	24499	Presser Foot Shank with 665J .....
665J	24499	Presser Foot Shank Adjusting Screw .....
147550	24499	Presser Foot Thread Cutter.....
239J	24499	Presser Foot Thread Cutter Screw.....
147551	24499	Presser Foot (hinged) complete with Thread Cutter, Nos. 239J, 26276, 147548, 147549 and 147550 .....
131528	24499	Throat Plate.....

Fittings for Plain Work
3/8 in. to 13/32 in. gauges

NOTE: When ordering these Fittings, state gauge required.

No.	Plate	Name
131093	24500	Feed Dog, 16 teeth (16 teeth to the inch)....
26276	24500	Presser Foot Hinge Pin.....
131164	24500	Presser Foot Plate.....
46087	24500	Presser Foot Shank .....
131165	24500	Presser Foot (hinged) complete, Nos. 26276, 46087 and 131164.....
26276	24500	Presser Foot Hinge Pin.....
147548	24500	Presser Foot Plate.....
147549	24500	Presser Foot Shank with 665J .....
665J	24500	Presser Foot Shank Adjusting Screw .....
147550	24500	Presser Foot Thread Cutter.....
239J	24500	Presser Foot Thread Cutter Screw.....
147551	24500	Presser Foot (hinged)complete with Thread Cutter, Nos. 239J, 26276, 147546, 147549 and 147550 .....
131214	24500	Throat Plate .....

Fittings for Plain Work
3/8 in. to 1/2 in. gauges

NOTE: When ordering these Fittings, state gauge required.

No.	Plate	Name
131118	24501	Feed Dog, 16 teeth (14 teeth to the inch)....
26276	24501	Presser Foot Hinge Pin.....
131164	24501	Presser Foot Plate .....
46087	24501	Presser Foot Shank .....
131165	24501	Presser Foot (hinged) complete, Nos. 26276, 46087 and 131164 .....

No.	Plate	Name
26276	24501	Presser Foot Hinge Pin.....
147548	24501	Presser Foot Plate.....
147549	24501	Presser Foot Shank with 665J .....
665J	24501	Presser Foot Shank Adjusting Screw .....
147550	24501	Presser Foot Thread Cutter.....
239J	24501	Presser Foot Thread Cutter Screw.....
147551	24501	Presser Foot (hinged) complete with Thread Cutter, Nos. 239J, 26276, 147548, 147549 and 147550 .....
131215	24501	Throat Plate .....

Fittings for Plain Work
3/16 in. to 3/8 in. gauges

NOTE: When ordering these Fittings, state gauge required.

No.	Plate	Name
131125	24502	Feed Dog, 17 teeth (16 teeth to the inch)....
26276	24502	Presser Foot Hinge Pin.....
46086	24502	Presser Foot Plate .....
46087	24502	Presser Foot Shank .....
46088	24502	Presser Foot (hinged) complete, Nos. 26276, 46086 and 46087 .....
26276	24502	Presser Foot Hinge Pin.....
131164	24502	Presser Foot Plate .....
46087	24502	Presser Foot Shank .....
131165	24502	Presser Foot (hinged) complete, Nos. 26276, 46087 and 131164 .....
26276	24502	Presser Foot Hinge Pin.....
147548	24502	Presser Foot Plate.....
147549	24502	Presser Foot Shank with 665J.....
665J	24502	Presser Foot Shank Adjusting Screw .....
147550	24502	Presser Foot Thread Cutter.....
239J	24502	Presser Foot Thread Cutter Screw.....
147551	24502	Presser Foot (hinged) complete with Thread Cutter, Nos. 239J, 26276, 147548, 147549 and 147550 .....
46090	24502	Throat Plate .....

From the library of: Superior Sewing Machine & Supply LLC

Fittings for Bloomer Work
7/32 in. to 9/32 in. gauges

NOTE: When ordering these Fittings, state gauge required.

No.	Plate	Name
68200	24503	Feed Dog, 25 teeth (20 teeth to the inch)...
160715	24505	Hemmer.....
160712	24505	Hemmer Bracket with 10248 .....
160713	24505	Hemmer Elastic Guide with 336J .....
160714	24505	Hemmer Elastic Guide Spring.....
337J	24505	Hemmer Elastic Guide Spring Screw (2)...
336J	24505	Hemmer Elastic Guide Stop Screw.....
120630	24505	Hemmer Tension Elastic Guide.....
120631	24505	Hemmer Tension Plate.....
10248	24505	Hemmer Tension Plate Position Pin .....
1560C	24505	Hemmer Tension Regulating Thumb Nut...
916C	24505	Hemmer Tension Screw Stud.....
44209	-----	Hemmer Tension Screw Stud 916C with 1560C .....
45869	24505	Hemmer Tension Spring.....
51097J	24505	Hemmer Thumb Screw (2) .....
3146	24505	Hemmer Thumb Screw Washer (2).....
160716	24505	Hemmer with Elastic Tension complete, Nos. 44209, 45869, 120630, 120631, 160712, 160713, 160714, 160715 and two each 337J, 3146 and 51097J .....
68269	24503	Presser Foot Chaining-off Plate (left) ....
68270	24503	Presser Foot Chaining-off Plate (right)...
973J	24503	Presser Foot Chaining-off Plate Screw (2).
36681	24503	Presser Foot Chaining-off Plate Spring (4)
26276	24503	Presser Foot Hinge Pin .....
68271	24503	Presser Foot Plate .....
68272	24503	Presser Foot Shank.....
68273	24503	Presser Foot (spring hinged) with left and right hand Chaining-off and Guide Plates complete, Nos. 26276, 68269, 68270, 68271, 68272, two 973J and four 36681...
68201	24503	Throat Plate .....

Fittings for Bloomer Work
5/16 in. 11/32 in. and 3/8 in. gauges

NOTE: When ordering these Fittings, state gauge required.

No.	Plate	Name
68095	24504	Feed Dog, 25 teeth (20 teeth to the inch) ..
160715	24505	Hemmer.....
160712	24505	Hemmer Bracket with 10248 .....
160713	24505	Hemmer Elastic Guide with 336J .....

No.	Plate	Name
160714	24505	Hemmer Elastic Guide Spring.....
337J	24505	Hemmer Elastic Guide Spring Screw (2) ...
336J	24505	Hemmer Elastic Guide Stop Screw.....
120630	24505	Hemmer Tension Elastic Guide .....
120631	24505	Hemmer Tension Plate.....
10248	24505	Hemmer Tension Plate Position Pin.....
1560C	24505	Hemmer Tension Regulating Thumb Nut....
916C	24505	Hemmer Tension Screw Stud.....
44209	-----	Hemmer Tension Screw Stud 916C with 1560C.....
45869	24505	Hemmer Tension Spring.....
51097J	24505	Hemmer Thumb Screw (2).....
3146	24505	Hemmer Thumb Screw Washer (2) .....
160716	24505	Hemmer with Elastic Tension complete, Nos. 44209, 45869, 120630, 120631, 160712, 160713, 160714, 160715 and two each 337J, 3146 and 51097J.....
68096	24504	Presser Foot Chaining-off Plate (left) with 68097 and 68099.....
68097	24504	Presser Foot Chaining-off Plate (left) Guide Pin (long) .....
68098	24504	Presser Foot Chaining-off Plate (left) Guide Pin (long) Collar with 906AL .....
906AL	24504	Presser Foot Chaining-off Plate (left) Guide Pin (long) Collar Set Screw.....
68099	24504	Presser Foot Chaining-off Plate (left) Guide Pin (short) .....
68100	24504	Presser Foot Chaining-off Plate (left) Spring .....
68101	24504	Presser Foot Chaining-off Plate (right) with 68097 and 68099.....
68097	24504	Presser Foot Chaining-off Plate (right) Guide Pin (long).....
68098	24504	Presser Foot Chaining-off Plate (right) Guide Pin (long) Collar with 906AL.....
906AL	24504	Presser Foot Chaining-off Plate (right) Guide Pin (long) Collar Set Screw.....
68099	24504	Presser Foot Chaining-off Plate (right) Guide Pin (short) .....
68100	24504	Presser Foot Chaining-off Plate (right) Spring .....
26276	24504	Presser Foot Hinge Pin.....
68102	24504	Presser Foot Plate.....
68103	24504	Presser Foot Shank.....
68100	24504	Presser Foot Spring.....
68104	24504	Presser Foot (spring hinged) with right and left Chaining-off Plates complete, Nos. 26276, 68096, 68101, 68102, 68103, two 68098 and three 68100.....
68105	24504	Throat Plate.....

From the library of: Superior Sewing Machine & Supply LLC

Fittings for Lap Seam Felling
3/32 in. to 1/4 in. gauges

NOTE: When ordering these Fittings, state gauge required.

No.	Plate	Name
131032	24506	Feed Dog, 17 teeth (16 teeth to the inch)...
26276	24506	Presser Foot Hinge Pin .....
131158	24506	Presser Foot Plate.....
54120	24506	Presser Foot Shank .....
131159	24506	Presser Foot (hinged) complete, Nos. 26276, 54120 and 131158.....
26276	24506	Presser Foot Hinge Pin.....
131916	24506	Presser Foot Plate .....
46087	24506	Presser Foot Shank .....
131917	24506	Presser Foot (hinged) complete, Nos. 26276, 46087 and 131916.....
131209	24506	Throat Plate.....

Fittings for Lap Seam Felling
5/32 in. to 11/32 in. gauges

NOTE: When ordering these Fittings, state gauge required.

No.	Plate	Name
131321	24507	Feed Dog, 16 teeth (16 teeth to the inch) with row of teeth between needles.....
131938	24507	Feed Dog, 14 teeth (14 teeth to the inch) with row of teeth between needles.....
26276	24507	Presser Foot Hinge Pin.....
131158	24507	Presser Foot Plate.....
54120	24507	Presser Foot Shank .....
131159	24507	Presser Foot (hinged) complete, Nos. 26276, 54120 and 131158 .....
26276	24507	Presser Foot Hinge Pin.....
131916	24507	Presser Foot Plate .....
46087	24507	Presser Foot Shank .....
131917	24507	Presser Foot (hinged) complete, Nos.26276, 46087 and 131916 .....
131527	24507	Throat Plate.....

Fittings for Lap Seam Felling
3/8 in. and 13/32 in. gauges

NOTE: When ordering these Fittings, state gauge required.

No.	Plate	Name
131093	24508	Feed Dog, 16 teeth (16 teeth to the inch)...
26276	24508	Presser Foot Hinge Pin .....
131158	24508	Presser Foot Plate .....
54120	24508	Presser Foot Shank .....
131159	24508	Presser Foot (hinged) complete, Nos. 26276, 54120 and 131158.....
26276	24508	Presser Foot Hinge Pin.....
131916	24508	Presser Foot Plate.....
46087	24508	Presser Foot Shank .....
131917	24508	Presser Foot (hinged) complete, Nos. 26276, 46087 and 131916.....
131213	24508	Throat Plate.....

Fittings for Lap Seam Felling
3/8 in. to 1/2 in. gauges

NOTE: When ordering these Fittings, state gauge required.

No.	Plate	Name
131118	24509	Feed Dog, 16 teeth (14 teeth to the inch)...
26276	24509	Presser Foot Hinge Pin.....
131158	24509	Presser Foot Plate.....
54120	24509	Presser Foot Shank .....
131159	24509	Presser Foot (hinged) complete, Nos. 26276, 54120 and 131158.....
26276	24509	Presser Foot Hinge Pin.....
131916	24509	Presser Foot Plate .....
46087	24509	Presser Foot Shank .....
131917	24509	Presser Foot (hinged) complete, Nos. 26276, 46087 and 131916.....
131124	24509	Throat Plate .....

Fittings for Lap Seam Felling
3/16 in. to 3/8 in. gauges

NOTE: When ordering these Fittings, state gauge required.

No.	Plate	Name
68381	24510	Feed Dog, 17 teeth (14 teeth to the inch)...
131241	24510	Feed Dog 12 teeth (10 teeth to the inch)....

From the library of: Superior Sewing Machine & Supply LLC

No.	Plate	Name
26276	24510	Presser Foot Hinge Pin
131242	24510	Presser Foot Plate
131233	24510	Presser Foot Shank
131243	24510	Presser Foot (hinged) complete, Nos. 26276, 131233 and 131242
131115	24510	Throat Plate

ACCESSORIES

No.	Plate	Name
120344	24511	Oiler (copper plated) with 120345
120345	24511	Oiler Spout, 4-1/2 in. long
120440	24511	Screw Driver (large)
121108	24511	Screw Driver (small)
120341	24511	Tweezers (curved)
4822	24511	Wrench for 1547
8908	24511	Wrench for 1520
164197	24511	Wrench for 51715 (not regularly furnished).

BELT GUARD

No.	Plate	Name
68222	20633	Belt Guard with two wood screws 1 in. No. 12

BENCH STAND No. 135377

For Machine Base No. 147515
When Machine is mounted on top of Table

No.	Plate	Name
135377	-----	Bench Stand with 27998, 41538, two each 60656, 126849, three wood screws 1-1/4 in. No. 12, four wood screws 1-1/4 in. No. 10 and eight each wood screws 5/8 in. No. 6 and 5/8 in. No. 7
126849	24511	Flap Hinge with four wood screws 3/4 in. No. 7 (2)
27998	24511	Flap Hook and Eye (large) with wood screw 1/2 in. No. 5
126247	24511	Flush Bolt
126248	24511	Flush Bolt Plate
41538	-----	Flush Bolt with Plate complete, Nos. 126247, 126248 and four brass wood screws 5/8 in. No. 4
60656	24511	Hinge (2)

FOOT LIFTER PARTS

No.	Plate	Name
6439	-----	Chain, 36 in. to 45 in., with 56864 and 56865
	NOTE:	When ordering No. 6439, state length required.
4879	20633	Chain Connecting Link
56864	24511	Chain Hook (large)
56865	24511	Chain Hook (small)
126249	20633	Treadle
4882	26033	Treadle Shaft
126250	20633	Treadle Spring
150451	20633	Treadle Stand
150452	20633	Treadle complete, Nos. 4879, 4882, 126249, 126250, 150451 and two wood screws 1 in. No. 16 F.H.

KNEE LIFTER PARTS

For use when Machine is mounted on top of Table

No.	Plate	Name
37563	-----	Chain, length 15 in., with 56864 and 56865
56864	24511	Chain Hook (large)
56865	24511	Chain Hook (small)
2763	20633	Rock Shaft
12242	20633	Rock Shaft Hanger with two wood screws 1 in. No. 10 (2)
6335	20633	Rock Shaft Knee Arm with 1509E
6336	-----	Rock Shaft Knee Arm complete, Nos. 2766, 2767 and 6335
2766	20633	Rock Shaft Knee Arm Hub with 356C
356C	20633	Rock Shaft Knee Arm Hub Set Screw
1509E	-----	Rock Shaft Knee Arm Lock Nut
2767	20633	Rock Shaft Knee Plate with 356C
356C	20633	Rock Shaft Knee Plate Set Screw
6337	20633	Rock Shaft Lifting Bracket with two 356C
7125	20633	Rock Shaft Lifting Bracket Hook
356C	20633	Rock Shaft Lifting Bracket Hook Set Screw
356C	20633	Rock Shaft Lifting Bracket Set Screw
2770	20633	Rock Shaft Stop Dog with 140219C
140219C	20633	Rock Shaft Stop Dog Set Screw
23767	20633	Rock Shaft complete, Nos. 2763, 2770, 6336, 6337, 7125 and two 12242

From the library of: Superior Sewing Machine & Supply LLC

MACHINE BASE

No.	Plate	Name
131658	24512	Machine Base
54477	24512	Machine Base Screw Stud (3)
131022	24512	Machine Base Screw Stud Bushing (rubber) (4)
51576E	24512	Machine Base Screw Stud Nut (3)
9842	24512	Machine Base Screw Stud Nut Washer (3)
131279	24512	Machine Cushion (felt) (4)
131205	24512	Machine Screw Stud, to fasten machine to base (4)
147514	24512	Machine Base complete, Nos. 131658, three each 9842, 51576E, 54477 and four each 131205 and 131279
147515	24512	Machine Base and Oil Drain Jar (swinging type) complete, Nos. 131268 and 147514

MACHINE BASE OIL DRAIN JAR
(Swinging type)

No.	Plate	Name
131961	24512	Jar (glass)
131962	24512	Jar Cap
131188	24512	Jar Clamp
131217	-----	Jar Clamp 131188 with 131189
131189	24512	Jar Clamp Lever
1099C	24512	Jar Clamp Lever Hinge Screw (2)
131265	24512	Nipple (long) (2)
131266	24512	Nipple (short)
131267	24512	Nipple Elbow (2)
131268	24512	Machine Base Oil Drain Jar (Swinging type) complete, Nos. 131217, 131266, 131961, 131962 and two each 1099C, 131265 and 131267

THREAD UNWINDER
(FOR FOUR SPOOLS)

No.	Plate	Name
228764	24513	Spool Pin (4)
228766	24513	Spool Rest (for two spools) with 201254C (2)
150203	24513	Spool Rest Cushion (felt) (4)
228767	24513	Spool Rest Rod
201254C	24513	Spool Rest Set Screw (2)
228768	24513	Spool Stand
228769	24513	Thread Guide (4)
228772	24513	Thread Guide Holder

No.	Plate	Name
228774	24513	Thread Guide Rod
150058	24513	Thread Separator
150060	24513	Thread Separator Bracket Arm with 164J and 9525
164J	24513	Thread Separator Bracket Arm Clamping Screw
9525	24513	Thread Separator Bracket Arm Clamping Screw Washer
164J	24513	Thread Separator Bracket Arm Screw
9525	24513	Thread Separator Bracket Arm Screw Washer
150061	-----	Thread Separator complete, Nos. 164J, 9525, 150058 and 150060
150062	24513	Thread Unwinder complete, Nos. 150061, 228767, 228768, 228772, 228774, two 228766, three wood screws 7/8 in. No. 12 and four each 150203, 228764 and 228769
27739	24513	Thread Cone (wood) for large cones
225390	24513	Thread Cone Holder, for inverted cones
	NOTE:	Nos. 27739 and 225390 are used with, but not included in 150062.

SINGER Needles should be used
in SINGER Machines
These Needles and their Containers
are marked with the
Company's Trademark "SIMANCO" 1

Needles in Containers marked
"FOR SINGER MACHINES"
are NOT SINGER made needles 2

From the library of: Superior Sewing Machine & Supply LLC

SINGER Needles should be used
in SINGER Machines
These Needles and their Containers
are marked with the
Company's Trademark "SIMANCO" 1

Needles in Containers marked
"FOR SINGER MACHINES"
are NOT SINGER made needles 2

NUMERICAL LIST OF PARTS

No.	Plate	Name
79C	24494	Feed Roll (upper) Lifter Latch Hinge Screw for 147503
144D	24489	Arm Rotary Shaft Screw
161J	20727	Presser Bar Lifting Lever Extension Screw
164J	24513	Thread Unwinder Thread Separator Bracket Arm Clamping Screw for 150060
164J	24513	Thread Unwinder Thread Separator Bracket Arm Screw for 150061
171AL	24497	Slack Thread Regulator Holder Crank Clamping Screw for 131405
175E	20747	Looper Carrier Adjusting Screw for 54027
175AL	20747	Looper Carrier Driver Cap Screw for 68479
176J	24498	Needle Guard (stationary) Holder Screw
176E	24496	Oil Pipe (back of arm) Clamp Screw
190J	24493	Feed Bar Feed Dog Seat Screw for 131942
190J	24498	Presser Foot Screw
190J	20727	Thread (under) Eyelet (back) Screw
190J	20728	Thread (under) Take-up Stripper Clamp Screw for 131934
190J	20728	Thread (under) Take-up Stripper Plate Screw for 131934
190J	20727	Thread (upper) Eyelet Screw
198E	24496	Oil Pipe (back of arm) Connection Cap Screw for 68494
198E	24496	Oil Pipe (front of arm) Connection Cap Screw for 131002, 131003 and 131084
205C	24489	Arm Rotary Shaft Ball Bearing (back) Case Cap Screw for 131479
207E	24493	Feed Bar Wearing Plate Screw for 131942
207J	20728	Thread (under) Take-up Thread Guide (left) Screw for 131934
207J	20728	Thread (under) Take-up Thread Guide (right) Screw for 131934
208AL	24494	Feed Roll (upper) Lifter Latch Stop Screw for 147503
217J	24489	Feed Eccentric Clamping Washer Screw for 54025
217J	24489	Feed Roll (lower) Eccentric Clamping Washer Screw for 54456
217C	24498	Needle Guard (stationary) Screw
217J	24497	Slack Thread Regulator Screw
223J	24490	Thread (upper) Take-up Clamping Screw for 131499
239J	24498	Presser Foot Thread Cutter Screw for 147551
316C	20727	Tension (upper thread) Releasing Shaft Stop Screw
330J	24490	Face Plate (lower half) Screw
336J	24505	Hemmer Elastic Guide Stop Screw for 160713

From the library of: Superior Sewing Machine & Supply LLC

No.	Plate	Name
337J	24505	Hemmer Elastic Guide Spring Screw for 160716
356C	20633	Knee Lifter Rock Shaft Knee Arm Hub Set Screw for 2766
356C	20633	Knee Lifter Rock Shaft Knee Plate Set Screw for 2767
356C	20633	Knee Lifter Rock Shaft Lifting Bracket Hook Set Screw for 6337
356C	20633	Knee Lifter Rock Shaft Lifting Bracket Set Screw for 6337
389F	24491	Cloth Plate Thread Guard Screw (lower)
423AL	24488	Arm Rock Shaft Bushing (intermediate) Set Screw
429C	24489	Arm Rotary Shaft Ball Bearing (back) Case Set Screw
443AL	20747	Looper Throw-out Handle Set Screw for 68485
446AL	24488	Arm Rock Shaft Bushing (back) Set Screw
448AL	24494	Feed Roll (upper) Bar Collar Set Screw for 127536
452AL	20747	Looper (back) Set Screw for 131052
453AL	24488	Arm Rock Shaft Flanged Bushing (front) Set Screw
453AL	24493	Feed Rocking Frame Hinge Pin Bushing Set Screw
453AL	24493	Feed Rocking Frame Hinge Pin Set Screw for 131240
453AL	24494	Feed Roll (upper) Bracket Guide Pin Set Screw for 147502
453AL	24494	Feed Roll (upper) Bracket Set Screw for 127538
453AL	24490	Presser Bar Lifting Bracket Guide Set Screw
453AL	24490	Presser Bar Lifting Bracket Set Screw for 131401
457AL	24489	Arm Rotary Shaft Ball Bearing (intermediate) Collar Set Screw for 131482
460AL	24493	Feed Dog Stop Screw for 131730
465AL	24495	Feed Roll (lower) Clutch Shaft Collar Set Screw for 62562
624AL	20727	Tension (upper thread) Releasing Shaft Crank Set Screw for 54047
640E	24489	Looper Driving Shaft and Feed Lifting Eccentric Screw for 147516
665J	24491	Cloth Plate Slide (left) Spring Screw for 131051
665J	24491	Cloth Plate Slide (right) Spring Screw for 131383 and 131384
665J	24498	Presser Foot Shank Adjusting Screw for 147549
691F	20727	Tension (under thread) Bracket Screw
735AL	24493	Feed Bar Hinge Pin Collar Set Screw for 59343
742F	24498	Throat Plate Screw

No.	Plate	Name
761E	24489	Arm Rotary Shaft Bushing (front) Set Screw
761E	24489	Looper Driving Shaft and Feed Lifting Eccentric Bushing Position Screw for 68483
769C	24494	Feed Roll (upper) Bar Bracket Screw (upper)
802X	20727	Presser Bar Lifting Lever Hinge Screw
853AL	24488	Needle Bar Connecting Link Hinge Stud Set Screw for 131475
861C	24490	Needle Bar Connecting Link Hinge Stud Oil Plug Screw
866D	24494	Feed Roll (upper) Lifter Hinge Screw for 147503
896AL	24489	Feed Connecting Rod Cap Screw for 131500
896AL	24489	Feed Roll (lower) Connecting Rod Cap Screw for 131999
906AL	24504	Presser Foot Chaining-off Plate (left) Guide Pin (long) Collar Set Screw for 68098
906AL	24504	Presser Foot Chaining-off Plate (right) Guide Pin (long) Collar Set Screw for 68098
913W	24494	Feed Roll (upper) Pressure Regulating Thumb Screw for 147503
916C	24505	Hemmer Tension Screw Stud for 44209
948D	24495	Feed Roll (lower) Clutch Shaft Bracket Screw
949J	24495	Feed Roll (lower) Clutch (brake) Clamping Screw for 131997
965D	20728	Thread (under) Take-up Stripper Plate Bracket Screw
973J	24503	Presser Foot Chaining-off Plate Screw for 68273
997J	20727	Thread (upper) Take-up (auxiliary) Clamp Screw
1011F	24492	Cloth Plate Extension Screw
1011F	24491	Cloth Plate Screw (left)
1053E	24490	Face Plate (upper half) Position Plate Screw
1057AL	24514	Arm Bottom Cover Screw
1057AL	24514	Arm Side Cover Screw
1057AL	24489	Crank Connecting Rod Cap (upper) Screw for 131926
1057AL	24489	Feed Connecting Rod Clamping Screw for 131500
1099C	24512	Machine Base Oil Drain Jar Clamp Lever Hinge Screw for 131268
1103C	24489	Feed Regulating Screw for 54025
1103C	24489	Feed Roll (lower) Eccentric Regulating Screw for 54456
1120AL	20747	Looper (front) Set Screw for 131052
1133AL	24490	Needle Bar Bushing (lower) Set Screw
1133AL	24490	Needle Bar Bushing (upper) Set Screw
1133AL	24490	Presser Bar Bushing (lower) Set Screw
1133AL	24490	Presser Bar Bushing (upper) Set Screw

From the library of: Superior Sewing Machine & Supply LLC

No.	Plate	Name
1149AL	24497	Thread (upper) Nipper Hole Plug Position Screw
1193D	24494	Feed Roll (upper) Bar Bracket Screw (lower)
1235F	24488	Arm Rock Shaft Oil Plug Screw for 131474
1257C	24489	Feed Roll (lower) Connecting Rod Hinge Screw
1258AL	24489	Thread (under) Take-up Set Screw for 131407
1289X	24514	Arm Side Cover Cap Screw for 131911
1304C	24489	Arm Rotary Shaft Ball Bearing (intermediate) Case Set Screw
1309C	24488	Arm Rock Shaft Adjusting Screw
1330C	24494	Feed Roll (upper) Lifter Stop Screw for 147503
1375AL	24495	Feed Roll (lower) Clutch (drive) Connection Set Screw for 131716
1390C	24495	Feed Roll (lower) Clutch (drive) Connection Clamping Screw for 131716
1423J	24497	Slack Thread Regulator Holder Crank Cap Screw
1492E	24490	Needle Bar Connecting Stud Clamping Screw for 131492
1498AL	24490	Needle Set Screw for 131044
1509E	-----	Knee Lifter Rock Shaft Knee Arm Lock Nut for 6335
1520J	24490	Needle Bar Connecting Link Hinge Stud Nut
1547J	20727	Tension (upper thread) Releasing Shaft Stop Screw Nut
1560C	24505	Hemmer Tension Regulating Thumb Nut for 44209
1620E	24489	Feed Roll (lower) Connecting Rod Hinge Screw Nut
1637J	24514	Presser Bar Spring Screw Stud Lock Nut for 131830
1708J	24492	Cloth Plate Extension Supporting Bracket Screw (upper) Nut
1733	24496	Oil Pipe (back of arm) Coupling Nut (brass)
1733	24496	Oil Pipe (front of arm) Coupling Nut (brass) for 68500 and 131637
1876	24494	Feed Roll (upper) Bar Collar Roller and Screw Stud for 147503
2102	20727	Tension (under thread) Disc
2102	20727	Tension (upper thread) Disc
2763	20633	Knee Lifter Rock Shaft for 23767
2766	20633	Knee Lifter Rock Shaft Knee Arm Hub with 356C, for 6336
2767	20633	Knee Lifter Rock Shaft Knee Plate with 356C, for 6336
2770	20633	Knee Lifter Rock Shaft Stop Dog with 140219C, for 23767
3146	24505	Hemmer Thumb Screw Washer for 160716
4822	24511	Wrench for 1547 (Accessories)
4879	20633	Foot Lifter Chain Connecting Link for 150452

No.	Plate	Name
4882	20633	Foot Lifter Treadle Shaft for 150452
6335	20633	Knee Lifter Rock Shaft Knee Arm with 1509E, for 6336
6336	-----	Knee Lifter Rock Shaft Knee Arm complete, for 23767, Nos. 2766, 2767 and 6335
6337	20633	Knee Lifter Rock Shaft Lifting Bracket with two 356C, for 23767
6439	-----	Foot Lifter Chain 36 in. to 45 in., with 56864 and 56865
	NOTE:	When ordering No. 6439, state length required.
7071	24489	Feed Eccentric Clamping Washer for 54025
7071	24489	Feed Roll (lower) Eccentric Clamping Washer for 54456
7071	20728	Thread (under) Take-up Thread Guide (left) Screw Washer for 131934
7071	20728	Thread (under) Take-up Thread Guide (right) Screw Washer for 131934
7125	20633	Knee Lifter Rock Shaft Lifting Bracket Hook for 23767
8908	24511	Wrench for 1520 (Accessories)
9525	24513	Thread Unwinder Thread Separator Bracket Arm Clamping Screw Washer for 150060
9525	24513	Thread Unwinder Thread Separator Bracket Arm Screw Washer for 150061
9842	24512	Machine Base Screw Stud Nut Washer for 147514
10248	24505	Hemmer Tension Plate Position Pin for 160712
11173	24490	Presser Bar Lifting Bracket Guide
12242	20633	Knee Lifter Rock Shaft Hanger with two wood screws 1 in. No. 10, for 23767
22436	24493	Feed Bar Feed Dog Seat Screw Washer for 131942
23404	24494	Feed Roll (upper) Bar Spring for 147503
23767	20633	Knee Lifter Rock Shaft complete, for when Machine is mounted on top of table, Nos. 2763, 2770, 6336, 6337, 7125 and two 12242
26276	24498	Presser Foot Hinge Pin for 46088, 68104, 68273, 131159, 131165, 131243, 131917 and 147551
27739	24513	Thread Unwinder Thread Cone (wood) for large cones
	NOTE:	No. 27739 is used with, but not included in 150062.
27998	24511	Bench Stand Flap Hook and Eye (large) with wood screw 1/2 in. No. 5, for 135377
29234	24490	Face Plate (upper half) Position Plate
32062	20728	Thread (under) Take-up Stripper Washer for 131934
32572	20727	Tension (upper thread) Releasing Disc
36681	24503	Presser Foot Chaining-off Plate Spring for 68273
37563	-----	Knee Lifter Chain, length 15 in., with 56864 and 56865

From the library of: Superior Sewing Machine & Supply LLC

No.	Plate	Name
38456	24490	Presser Bar Bushing (upper)
38468	24514	Presser Bar Spring Stud
38648	24494	Feed Roll (upper) Lifter Latch Spring for 147503
41538	-----	Bench Stand Flush Bolt with Plate complete, for 135377, Nos. 126247, 126248 and four brass wood screws 5/8 in. No. 4
42365	24488	Arm Rock Shaft Oil Pad for oiling Back Bearing
42367	24489	Arm Rotary Shaft Front Bearing Oil Pad (lower)
43503	20747	Looper Throw-out Handle Plunger Spring
44209	-----	Hemmer Tension Screw Stud 916C with 1560C, for 160716
45869	24505	Hemmer Tension Spring for 160716
46086	24502	Presser Foot Plate for 46088
	NOTE:	When ordering No. 46086, state gauge required.
46087	24498	Presser Foot Shank for 46088, 131165 and 131917
46088	24502	Presser Foot (hinged) complete, for 3/16 in. to 3/8 in. gauges, Nos. 26276, 46086 and 46087
	NOTE:	When ordering No. 46088, state gauge required.
46090	24502	Throat Plate for 131125, for 3/16 in. to 3/8 in. gauges
	NOTE:	When ordering No. 46090, state gauge required.
50073J	24498	Feed Dog Screw, when stationary Needle Guard is used
50326C	20727	Tension (under Thread) Screw Stud for 59539
50326C	20727	Tension (upper thread) Screw Stud for 59539
50396F	24491	Cloth Plate Screw (right)
50438J	20728	Thread (under) Take-up Oil Guard Screw for 131934
50470J	20728	Thread (under) Take-up Thread Guard Screw for 131934
50473F	24492	Cloth Plate Extension Supporting Bracket Screw (lower)
50473F	24492	Cloth Plate Extension Supporting Bracket Screw (upper)
50473F	24491	Cloth Plate Thread Guard Screw (upper)
50608R	24514	Arm Hole Plug Screw, for access to Crank Connecting Rod (upper bearing)
51061AL	24489	Feed Eccentric Body Set Screw for 54025
51061AL	24489	Feed Roll (lower) Eccentric Body Set Screw for 54456
51097J	24505	Hemmer Thumb Screw for 160716
51119J	20747	Looper Holder Screw
51224W	24490	Face Plate (upper half) Thumb Screw
51263D	20747	Looper Carrier Connection Shaft Sleeve Cap Screw

No.	Plate	Name
51283AL	24489	Machine Pulley Set Screw for 131914
51407AL	24489	Arm Rock Shaft Crank (back) Set Screw for 131072
51422J	24489	Looper Driving Shaft and Feed Lifting Eccentric Bracket Screw for 131975
51570C	20727	Tension (under thread) Regulating Thumb Nut for 59539
51570C	20727	Tension (upper thread) Regulating Thumb Nut for 59539
51576E	24512	Machine Base Screw Stud Nut for 147514
51697W	24514	Pressure Regulating Thumb Nut for 131830
51715AL	24489	Crank Connecting Rod Cap (lower) Screw Stud Nut for 131926
53225	20727	Thread (under) Eyelet (back)
54025	-----	Feed Eccentric (adjustable) complete, for 131502, Nos. 1103C, 138306, two each 217J, 7071 and three 51061AL
54027	20747	Looper Carrier with two 175E, for 131111
54038	24498	Needle Guard (stationary) Holder
54047	20727	Tension (upper thread) Releasing Shaft Crank with 624AL
54048	20727	Tension (upper thread) Releasing Shaft Crank Link
54067	24498	Needle Guard (stationary) for 3/32 in. to 5/32 in. gauges
	NOTE:	When ordering No. 54067, state gauge required.
54068	24500	Needle Guard (stationary) for 5/16 in. to 3/8 in. gauges
	NOTE:	When ordering No. 54068, state gauge required.
54070	20727	Tension (upper thread) Bracket
54071	20727	Tension (upper thread) Releasing Shaft
54120	24506	Presser Foot Shank for 131159
54218	24489	Arm Rotary Shaft Front Bearing Oil Pad (upper)
54227	20747	Looper Carrier Connection for 131111
54228	20747	Looper Carrier Connection Shaft for 131111
54242	20728	Thread (under) Take-up Stripper Clamp for 131934
54456	-----	Feed Roll (lower) Eccentric Adjustable complete, for 147501, Nos. 1103C, two each 217J, 7071 and three 51061AL
54457	24495	Feed Roll (lower) 1-1/4 in. wide with two 140279AL, for 54475
54472	24494	Feed Roll (upper) Lifter Latch for 147503
54473	-----	Feed Roll (upper) Lifter Latch Stop for 147503
54475	-----	Feed Roll (upper) Bracket 127538 with 54457 and 127546, for 147504
54477	24512	Machine Base Screw Stud for 147514
54481	24494	Feed Roll (upper) 1 in. wide with two 140279AL
54969	24488	Arm Rock Shaft Oil Pad for oiling Intermediate Bearing

From the library of: Superior Sewing Machine & Supply LLC

No.	Plate	Name
54988	20727	Tension (upper thread) Releasing Pin.....
56864	24511	Foot Lifter Chain Hook (large) for 6439 ...
56864	24511	Knee Lifter Chain Hook (large) for 37563 ..
56865	24511	Foot Lifter Chain Hook (small) for 6439 ...
56865	24511	Knee Lifter Chain Hook (small) for 37563..
57234	24493	Feed Rocking Frame Hinge Pin .....
57235	24493	Feed Rocking Frame Hinge Pin Bushing....
59343	24493	Feed Bar Hinge Pin Collar with 735AL, for 131945 .....
59537	20727	Tension (under thread) Spring Bushing (large).....
59537	20727	Tension (upper thread) Spring Bushing (large).....
59538	20727	Tension (under thread) Spring Bushing (small) .....
59538	20727	Tension (upper thread) Spring Bushing (small) .....
59539	-----	Tension (under thread) Screw Stud 50326C with 51570C .....
59539	-----	Tension (upper thread) Screw Stud 50326C with 51570C.....
59632	24491	Cloth Plate Oil Tube for 131980.....
60656	24511	Bench Stand Hinge for 135377.....
62562	24495	Feed Roll (lower) Clutch Shaft Collar with two 465AL, for 131996.....
64320	24490	Needle Bar Bushing (upper) .....
68058	-----	Feed Roll (lower) 1-1/4 in. wide with two 140279AL .....
68059	-----	Feed Roll (upper) 1 in. wide with two 140279AL .....
68095	24504	Feed Dog, 25 teeth (20 teeth to the inch) for 68105, for 5/16 in., 11/32 in. and 3/8 in. gauges .....
	NOTE:	When ordering No. 68095, state gauge required.
68096	24504	Presser Foot Chaining-off Plate (left) with 68097 and 68099, for 68104.....
68097	24504	Presser Foot Chaining-off Plate (left) Guide Pin (long) for 68096.....
68097	24504	Presser Foot Chaining-off Plate (right) Guide Pin (long) for 68101.....
68098	24504	Presser Foot Chaining-off Plate (left) Guide Pin (long) Collar with 906AL, for 68104 .....
68098	24504	Presser Foot Chaining-off Plate (right) Guide Pin (long) Collar with 906AL, for 68104 .....
68099	24504	Presser Foot Chaining-off Plate (left) Guide Pin (short) for 68096.....
68099	24504	Presser Foot Chaining-off Plate (right) Guide Pin (short) for 68101.....
68100	24504	Presser Foot Chaining-off Plate (left) Spring for 68104.....
68100	24504	Presser Foot Chaining-off Plate (right) Spring for 68104.....

No.	Plate	Name
68100	24504	Presser Foot Spring for 68104.....
68101	24504	Presser Foot Chaining-off Plate (right) with 68097 and 68099, for 68104.....
68102	24504	Presser Foot Plate for 68104.....
	NOTE:	When ordering No. 68102, state gauge required.
68103	24504	Presser Foot Shank for 68104 .....
68104	24504	Presser Foot (spring hinged) with right and left Chaining-off Plates complete, for 5/16 in., 11/32 in. and 3/8 in. gauges, Nos. 26276, 68096, 68101, 68102, 68103, two 68098 and three 68100.....
	NOTE:	When ordering No. 68104, state gauge required.
68105	24504	Throat Plate for 68095 for 5/16 in., 11/32 in. and 3/8 in. gauges .....
	NOTE:	When ordering No. 68105, state gauge required.
68123	24493	Needle Guard (movable) Clamp .....
68152	24495	Feed Roll (lower) Clutch Roller Plunger for 131727 .....
68184	20727	Presser Bar Lifting Lever Extension.....
68200	24503	Feed Dog, 25 teeth (20 teeth to the inch) for 68201 for 7/32 in. to 9/32 in. gauges.....
	NOTE:	When ordering No. 68200, state gauge required.
68201	24503	Throat Plate for 68200 for 7/32 in. to 9/32 in. gauges.....
	NOTE:	When ordering No. 68201, state gauge required.
68222	20633	Belt Guard with two wood screws 1 in. No. 12 .....
68261	20727	Tension (upper thread) Releasing Shaft Spring .....
68269	24503	Presser Foot Chaining-off Plate (left) for 68273 .....
68270	24503	Presser Foot Chaining-off Plate (right) for 68273 .....
68271	24503	Presser Foot Plate for 68273.....
	NOTE:	When ordering No. 68271, state gauge required.
68272	24503	Presser Foot Shank for 68273.....
68273	24503	Presser Foot (Spring hinged) with left and right hand Chaining-off and Guide Plates complete, for 7/32 in. to 9/32 in. gauges, Nos. 26276, 68269, 68270, 68271 and 68272, two 973J and four 36681.....
	NOTE:	When ordering No. 68273, state gauge required.
68350	24488	Arm Oil Cup, for oiling Arm Rock Shaft Front Bearing.....
68368	24491	Cloth Plate Slide (left) for 131051.....
68381	24510	Feed Dog, 17 teeth (14 teeth to the inch) for 131115, for 3/16 in. to 3/8 in. gauges....
	NOTE:	When ordering No. 68381, state gauge required.

From the library of: Superior Sewing Machine & Supply LLC

No.	Plate	Name
68428	24514	Arm Bottom Cover
68429	24514	Arm Bottom Cover Gasket (cork)
68433	24488	Arm Rock Shaft Bushing (back)
68435	24488	Arm Rock Shaft Bushing (back) Cap
68436	24488	Arm Rock Shaft Bushing (intermediate)
68448	24514	Arm Side Cover Gasket (victorite)
68467	24493	Feed Bar Wearing Plate for 131942
68478	20747	Looper Carrier Connection Shaft Sleeve (eccentric)
68479	20747	Looper Carrier Driver with four 175AL, for 131111
68483	-----	Looper Driving Shaft and Feed Lifting Eccentric Bracket with 761E, for 131975.
68485	20747	Looper Throw-out Handle with two 443AL
68486	20747	Looper Throw-out Handle Plunger
68488	24490	Needle Bar Connecting Link and Thread (upper) Controller for 131491
68489	24490	Needle Bar Connecting Link Hinge Stud (hollow) for 131491
68492	24496	Oil Pipe (back of arm) with 68497, for oiling Feed Rocking Frame Hinge Pin Front Bearing
68493	24496	Oil Pipe (back of arm) Clamp
68494	24496	Oil Pipe (back of arm) Connection with 68495 and two 198E, for oiling Feed Rocking Frame Hinge Pin Back Bearing
68495	24493	Feed Bar Slide Block Oil Pad (wick) for 131944
68495	24496	Oil Pipe (back of arm) Connection Oil Pad (wick) for 68494
68496	24496	Oil Pipe (back of arm) Coupling
68497	24489	Feed Connecting Rod Oil Pad (wick) for 131500
68497	24489	Feed Roll (lower) Connecting Rod Oil Pad (wick) for 131999
68497	-----	Looper Driving Shaft and Feed Lifting Eccentric Front Bearing Oil Pad (wick)
68497	24496	Oil Pipe (back of arm) Oil Pad (wick) for 68492
68497	24496	Oil Pipe (front of arm) Oil Pad (wick) for 131112 and 131113
68500	24496	Oil Pipe (front of arm) with 1733, 131084 and 131089, for oiling Arm Rotary Shaft Front Bearing, for 131638
120341	24511	Tweezers (curved) Accessories
120344	24511	Oiler (copper plated) with 120345 (Accessories)
120345	24511	Oiler Spout, 4-1/2 in. long for 120344
120440	24511	Screw Driver (large) Accessories
120630	24505	Hemmer Tension Elastic Guide for 160716.
120631	24505	Hemmer Tension Plate for 160716
121108	24511	Screw Driver (small) Accessories
126247	24511	Bench Stand Flush Bolt for 41538
126248	24511	Bench Stand Flush Bolt Plate for 41538
126249	20633	Foot Lifter Treadle for 150452

No.	Plate	Name
126250	20633	Foot Lifter Treadle Spring for 150452
126849	24511	Bench Stand Flap Hinge with four wood screws 3/4 in. No. 7, for 135377
127534	24494	Feed Roll (upper) Bar for 147503
127536	24494	Feed Roll (upper) Bar Collar with 448AL, for 147503
127538	24494	Feed Roll (upper) Bracket with 453AL, for Feed Rolls up to and including 1-1/4 in. wide, for 54475
127542	24494	Feed Roll (upper) Bracket Guide Pin for 147503
127546	24494	Feed Roll (upper) Shaft (2-9/16 in. long) for 54475
127838	24488	Arm Rock Shaft Crank (front) Pin for 131474.
128419	20747	Looper Carrier Connection Shaft Oil Pad (braided cotton)
128721	20727	Thread (upper) Eyelet
131002	24496	Oil Pipe (front of arm) Connection with two 198E, for oiling Looper Throw-out Device
131003	24496	Oil Pipe (front of arm) Connection with two 198E, for 131112 and 131113
131004	24496	Oil Pipe (front of arm) Coupling (center)
131004	24496	Oil Pipe (front of arm) Coupling (left)
131006	24490	Presser Bar Bushing (lower)
131011	20727	Tension (upper thread) Releasing Shaft Spring Position Plate
131012	20727	Tension (under thread) Bracket
131022	24512	Machine Base Screw Stud Bushing (rubber) for 131975
131028	20747	Looper Driving Shaft and Feed Lifting Eccentric Bushing Oil Plug
131032	24498	Feed Dog 17 teeth (16 teeth to the inch) for 131033 and 131209 for 3/32 in. to 1/4 in. gauges
	NOTE:	When ordering No. 131032, state gauge required.
131033	24498	Throat Plate for 131032, for 3/32 in. to 1/4 in. gauges
	NOTE:	When ordering No. 131033, state gauge required.
131039	24497	Thread (upper) Nipper Hole Plug
131044	24490	Needle Clamp with two 1498AL, for 131498.
	NOTE:	When ordering No. 131044, state gauge required.
131050	24491	Cloth Plate Slide (left) Spring for 131051
131051	24491	Cloth Plate Slide (left) complete, for 131988 and 131989, Nos. 68368, 131050 and two 665J
131052	20747	Looper Holder with 452AL and 1120AL
131056	24488	Arm Rock Shaft Adjusting Screw Washer
131072	24489	Arm Rock Shaft Crank, back (ball bearing, solid) with two 51407AL, for 131930

From the library of: Superior Sewing Machine & Supply LLC

No.	Plate	Name
131084	24496	Oil Pipe (front of arm) Connection with two 198E, for 68500
131087	24496	Oil Pipe (front of arm) Coupling (right)
131089	24496	Oil Pipe (front of arm) Oil Pad (wick) for 68500 and 131637
131093	24500	Feed Dog, 16 teeth (16 teeth to the inch) for 131213 and 131214, for 3/8 in. and 13/32 in. gauges
	NOTE:	When ordering No. 131093, state gauge required.
131095	24488	Arm Rock Shaft Bushing (back) Cap Washer (fiber)
131111	-----	Looper Driving Shaft and Feed Lifting Eccentric 131958 with 54027, 54227, 54228 and 68479, for 147516
131112	24496	Oil Pipe (front of arm) with 68497 and 131003, for oiling Feed Bar Slide Block, for 131638
131113	24496	Oil Pipe (front of arm) with 68497 and 131003, for oiling Feed Connection Rod, for 131638
131113	24496	Oil Pipe (front of arm) with 68497 and 131003, for oiling Feed Roll (lower) Connecting Rod, for 131638
131115	24510	Throat Plate for 68381 and 131241, for 3/16 in. to 3/8 in. gauges
	NOTE:	When ordering No. 131115, state gauge required.
131118	24501	Feed Dog, 16 teeth (14 teeth to the inch) for 131124 and 131215, for 3/8 in. to 1/2 in. gauges
	NOTE:	When ordering No. 131118, state gauge required.
131121	24500	Needle Guard (movable) for 13/32 in. to 1/2 in. gauges
	NOTE:	When ordering No. 131121, state gauge required.
131124	24509	Throat Plate for 131118, for 3/8 in. to 1/2 in. gauges
	NOTE:	When ordering No. 131124, state gauge required.
131125	24502	Feed Dog, 17 teeth (16 teeth to the inch) for 46090, for 3/16 in. to 3/8 in. gauges
	NOTE:	When ordering No. 131125, state gauge required.
131131	24498	Looper (back) closed eye, for general work
	NOTE:	When ordering No. 131131, state gauge of machine for which required.
131132	24498	Looper (front) closed eye, for general work
	NOTE:	When ordering No. 131132, state gauge of machine for which required.
131158	24506	Presser Foot Plate for 131159
	NOTE:	When ordering No. 131158, state gauge required.

No.	Plate	Name
131159	24506	Presser Foot (hinged) complete, for 3/32 in. to 1/2 in. gauges, Nos. 26276, 54120 and 131158
	NOTE:	When ordering No. 131159, state gauge required.
131164	24498	Presser Foot Plate for 131165
	NOTE:	When ordering No. 131164, state gauge required.
131165	24498	Presser Foot (hinged) complete, for 3/32 in. to 1/2 in. gauges, Nos. 26276, 46087 and 131164
	NOTE:	When ordering No. 131165, state gauge required.
131174	24498	Needle Guard (movable) for 3/16 in. to 3/8 in. gauge
	NOTE:	When ordering No. 131174, state gauge required.
131175	24500	Needle Guard (stationary) for 13/32 in. to 1/2 in. gauges
	NOTE:	When ordering No. 131175, state gauge required.
131188	24512	Machine Base Oil Drain Jar Clamp for 131217
131189	24512	Machine Base Oil Drain Jar Clamp Lever for 131217
131197	24493	Feed Bar Hinge Pin (eccentric) for 131945
131205	24512	Machine Base Machine Screw Stud, to fasten machine to base for 147514
131209	24506	Throat Plate for 131032, for 3/32 in. to 1/4 in. gauges
	NOTE:	When ordering No. 131209, state gauge required.
131213	24508	Throat Plate for 131093, for 3/8 in. and 13/32 in. gauges
	NOTE:	When ordering No. 131213, state gauge required.
131214	24500	Throat Plate for 131093, for 3/8 in. and 13/32 in. gauge
	NOTE:	When ordering No. 131214, state gauge required.
131215	24501	Throat Plate for 131118, for 3/8 in. to 1/2 in. gauges
	NOTE:	When ordering No. 131215, state gauge required.
131217	-----	Machine Base Oil Drain Jar Clamp 131188 with 131189, for 131268
131233	24510	Presser Foot Shank for 131243
131240	24493	Feed Rocking Frame with two 453AL, for 131945
131241	24510	Feed Dog, 12 teeth (10 teeth to the inch) for 131115, for 3/16 in. to 3/8 in. gauges
	NOTE:	When ordering No. 131241, state gauge required.

From the library of: Superior Sewing Machine & Supply LLC

No.	Plate	Name
131242	24510	Presser Foot Plate for 131243.....
	NOTE:	When ordering No. 131242, state gauge required.
131243	24510	Presser Foot (hinged) complete, for 3/16 in. to 3/8 in. gauges, Nos. 26276, 131233 and 131242.....
	NOTE:	When ordering No. 131243, state gauge required.
131265	24512	Machine Base Oil Drain Jar Nipple (long) for 131268.....
131266	24512	Machine Base Oil Drain Jar Nipple (short) for 131268.....
131267	24512	Machine Base Oil Drain Jar Nipple Elbow for 131268.....
131268	24512	Machine Base Oil Drain Jar (swinging type) complete, for 147515 Nos. 131217, 131266, 131961, 131962 and two each 1099C, 131265 and 131267.....
131270	24490	Needle Bar Connecting Link Hinge Stud Oil Pad (wick).....
131276	24514	Arm Side Cover (oil vent) for 131911.....
131279	24512	Machine Base Cushion (felt) for 147514.....
131280	24514	Arm Side Cover Cap Position Pin for 131911
131291	24490	Needle Bar Bushing (lower).....
131293	24488	Arm Rock Shaft for 131474.....
131319	24488	Arm Oil Cup Oil Pad for 68350.....
131321	24499	Feed Dog, 16 teeth (16 teeth to the inch) with row of teeth between needles, for 131527 and 131528, for 5/32 in. to 11/32 in. gauges.....
	NOTE:	When ordering No. 131321, state gauge required.
131366	24489	Arm Rotary Shaft Ball Bearing (back) for 131526.....
131366	24489	Arm Rotary Shaft Ball Bearing (intermediate)
131369	24489	Arm Rotary Shaft Ball Bearing (back) Case Cap for 131479.....
131370	24489	Arm Rotary Shaft Ball Bearing (back) Case Position Stud.....
131376	24491	Cloth Plate Slide (right) 1/16 in. Throat Plate clearance cut, for 131383.....
131377	-----	Cloth Plate Slide (right) 7/64 in. Throat Plate clearance cut, for 131384.....
131381	24491	Cloth Plate Slide (right) Spring, for 131383 and 131384.....
131383	24491	Cloth Plate Slide (right) complete, (1/16 in. Throat Plate clearance cut) for 131988, Nos. 131376, 131381 and two 665J.....
131384	-----	Cloth Plate Slide (right) complete, (7/64 in. Throat Plate clearance cut) for 131989, Nos. 131377, 131381 and two 665J.....
131395	24490	Face Plate (upper half).....
131401	24490	Presser Bar Lifting Bracket with 453AL....
131402	20727	Presser Bar Lifting Lever.....

No.	Plate	Name
131403	24497	Slack Thread Regulator.....
131404	24497	Slack Thread Regulator Holder.....
131405	24497	Slack Thread Regulator Holder Crank with 171AL.....
131406	24497	Slack Thread Regulator Holder Crank Connecting Link.....
131407	24489	Thread (under) Take-up with 1258AL.....
131408	20728	Thread (under) Take-up Oil Guard for 131934.....
131411	20728	Thread (under) Take-up Stripper Plate Bracket for 131934.....
131413	20728	Thread (under) Take-up Thread Guard (fiber) for 131934.....
131414	20728	Thread (under) Take-up Thread Guide (left) for 131934.....
131415	20728	Thread (under) Take-up Thread Guide (right) for 131934.....
131456	24488	Arm Rock Shaft Flanged Bushing (front)....
131457	24489	Arm Rotary Shaft Bushing (front).....
131458	24503	Looper (back) closed eye, for Lap Seam Felling.....
	NOTE:	When ordering No. 131458, state gauge of machine for which required.
131459	24503	Looper (front) closed eye, for Lap Seam Felling.....
	NOTE:	When ordering No. 131459, state gauge of machine for which required.
131474	-----	Arm Rock Shaft 131293 with 1235F, 127838 and 131475.....
*131475	-----	Arm Rock Shaft Crank (front) with 853AL for 131474.....
131476	24489	Arm Rotary Shaft for 147516.....
	NOTE:	When No. 131476 is required for repairs, The Looper Driving Shaft and Feed Lifting Eccentric must be returned to the factory to be adjusted to the new part.
131478	24489	Arm Rotary Shaft Ball Bearing (back) Case for 131479.....
131479	-----	Arm Rotary Shaft Ball Bearing (back) Case 131478 with 131369 and three 205C for 131526.....
131480	24489	Arm Rotary Shaft Ball Bearing (back) Spacing Collar for 131526.....
131481	24489	Arm Rotary Shaft Ball Bearing (intermediate) Case.....
131482	24489	Arm Rotary Shaft Ball Bearing intermediate) Collar with two 457AL.....
131491	-----	Needle Bar Connecting Link and Thread (upper) Controller 68488 with 68489 and 131492.....
131492	24490	Needle Bar Connecting Stud with 1492E, for 131491.....
131495	20727	Thread (upper) Take-up (auxiliary).....
131496	20727	Thread (upper) Take-up (auxiliary) Clamp.

From the library of: Superior Sewing Machine & Supply LLC

No.	Plate	Name
131497	24490	Needle Bar (hollow) for 131498
131498	-----	Needle Bar complete, Nos. 131044 and 131497
	NOTE:	When ordering 131498, state gauge required.
131499	24490	Thread (upper) Take-up with 223J
131500	24489	Feed Connecting Rod with 1057AL, 68497, 134260 and two 896AL, for 131502
131502	-----	Feed Connecting Rod 131500 with 54025, for 147516
131526	-----	Arm Rotary Shaft Ball Bearing (back) Case with Ball Bearings complete, Nos. 131479, 131480 and two 131366
131527	24507	Throat Plate for 131321, for 5/32 in. to 11/32 in. gauges
	NOTE:	When ordering No. 131527, state gauge required.
131528	24599	Throat Plate for 131321 and 131938 for 5/32 in. to 11/32 in. gauges
	NOTE:	When ordering No. 131528, state gauge required.
131637	24496	Oil Pipe (front of arm) with 131089 and two 1733 for oiling Looper Driving Shaft and Feed Lifting Eccentric Front Bearing, for 131638
131638	-----	Oil Pipe (front of arm) complete, Nos. 68500, 131112, 131637 and two 131113
131658	24512	Machine Base for 147514
131696	20727	Tension (under thread) Thread Guide (double)
131696	20727	Tension (upper thread) Thread Guide (double)
131712	24495	Feed Roll (lower) Clutch (brake) for 131713
131713	-----	Feed Roll (lower) Clutch (brake) 131712 with three 131726, for 131727
131714	24495	Feed Roll (lower) Clutch (drive) for 131715
131715	-----	Feed Roll (lower) Clutch (drive) 131714 with three 131726, for 131727
131716	24495	Feed Roll (lower) Clutch (drive) Connection with 1375AL and 1390C, for 131727
131717	24495	Feed Roll (lower) Clutch Roller for 131727
131718	24495	Feed Roll (lower) Clutch Roller Plunger Spring for 131727
131723	-----	Feed Roll (lower) Clutch Shaft Oil Wick for 131995
131725	24495	Feed Roll (lower) Clutch Washer for 131727
131726	24495	Feed Roll (lower) Clutch Wearing Plate for 131713 and 131715
131727	24495	Feed Roll (lower) Clutch complete, for 131996, Nos. 131713, 131715, 131716, 147615, two 131725 and six each 68152, 131717 and 131718
131728	-----	Feed Roll (soft rubber) 1-1/4 in. wide, with two 140279AL

No.	Plate	Name
131730	24493	Feed Bar Feed Dog Seat (adjustable) with 460AL, for 131942
131740	20727	Tension (under thread) Spring
131741	20727	Tension (upper thread) Spring
131749	24514	Presser Bar Spring for 131830
131750	24514	Presser Bar Spring (auxiliary) complete, for 131830
131751	24514	Presser Bar Spring Screw Stud for 131830
131752	24514	Pressure Regulating Thumb Nut Washer for 131830
131824	20728	Thread (under) Take-up Stripper for 131934
131825	20728	Thread (under) Take-up Stripper Plate for 131934
131830	24514	Presser Bar Spring complete, Nos. 1637J, 51697W, 131749, 131750, 131751 and 131752
131864	24489	Arm Oil Cup for 131866
131865	24489	Arm Oil Cup Oil Gauge complete for 131866
131866	24489	Arm Oil Cup with Oil Gauge complete, for filling oil reservoir, Nos. 131864 and 131865
131909	24514	Arm Side Cover Cap for 131911
131910	24514	Arm Side Cover Cap Spring for 131911
131911	24514	Arm Side Cover (oil vent) complete, Nos. 1289X, 131276, 131280, 131909 and 131910.
131912	24490	Presser Bar (hollow)
131914	24489	Machine Pulley (outside diam. of belt groove 2.9 in.) with two 51283AL, for "V" belt.
131916	24506	Presser Foot Plate for 131917
	NOTE:	When ordering No. 131916, state gauge required.
131917	24506	Presser Foot (hinged) complete, for 3/32 in. to 1/2 in. gauges, Nos. 26276, 46087 and 131916
	NOTE:	When ordering No. 131917, state gauge required.
131926	24489	Crank Connecting Rod with two each 1057AL, 51715AL, 131927 and 131928, for 131930.
	NOTE:	When No. 131926 is required for repairs, Connecting Rod and Arm Rock Shaft Crank (back) fitted together will be furnished. All Agency orders for this part must state the Machine Number for which it is required, in order to obtain correct Needle Bar Stroke,
131927	24489	Crank Connecting Rod Cap (lower) Screw Stud for 131926
131928	24489	Crank Connecting Rod Cap (lower) Screw Stud Nut Lock Washer for 131926
131930	-----	Crank Connecting Rod 131926 with 131072, for 147516
131934	20728	Thread (under) Take-up Stripper Plate Bracket 131411 with 32062, 50438J, 54242, 131408, 131413, 131414, 131415, 131824, 131825, two each 207J, 7071, 50470J and four 190J

From the library of: Superior Sewing Machine & Supply LLC

No.	Plate	Name
131938	24499	Feed Dog, 14 teeth (14 teeth to the inch) with row of teeth between needles, for 131527 and 131528, for 5/32 in. to 11/32 in. gauges
	NOTE:	When ordering No. 131938, state gauge required.
131941	24493	Feed Bar for 131942
131942	-----	Feed Bar with Feed Dog Leveling Device complete, for 131945 Nos. 190J, 22436, 68467, 131730, 131941 and two 207E
131943	24493	Feed Bar Slide Block for 131944
131944	24493	Feed Bar Slide Block 131943 with 68495 and 134260
131945	-----	Feed Rocking Frame 131240 with 59343, 131197 and 131942
131958	20747	Looper Driving Shaft and Feed Lifting Eccentric for 131111
	NOTE:	When No. 131958 is required for repairs, the Arm Rotary Shaft must be returned to the factory to be adjusted to the new part.
131959	20747	Looper Driving Shaft and feed Lifting Eccentric Bushing
131961	24512	Machine Base Oil Drain Jar (glass) for 131268
131962	24512	Machine Base Oil Drain Jar Cap for 131268.
*131975	-----	Arm upper and lower (solid) with 51422J, 68483 and four 131022
131979	-----	Feed Roll (soft rubber) 1-1/2 in. wide, with two 140279AL
131980	24491	Cloth Plate with 59632, for 131988 and 131989
131982	24492	Cloth Plate Extension Supporting Bracket
131988	-----	Cloth Plate complete, for Throat Plate with 1/16 in. offset, Nos. 131051, 131383 and 131980
131989	-----	Cloth Plate complete, for Throat Plate with 7/64 in. offset, Nos. 131051, 131384 and 131980
131992	24491	Cloth Plate Thread Guard
131993	-----	Feed Roll (lower, soft rubber) 2 in. wide with 140279AL
131994	-----	For Roll (soft rubber) 1-1/8 in. wide with two 140279AL
131995	24495	Feed Roll (lower) Clutch Shaft with 131723, for 131996
131996	-----	Feed Roll (lower) Clutch Shaft 131995 with 131727, 140267F and two 62562, for 131998
131997	24495	Feed Roll (lower) Clutch Shaft Bracket with 949J, for 131998
131998	-----	Feed Roll (lower) Clutch Shaft Bracket complete, Nos. 131996 and 131997
131999	24489	Feed Roll (lower) Connecting Rod with 68497, 134260 and two 896AL, for 147501.

No.	Plate	Name
133251	-----	Feed Roll (upper) Spacing Collar
	NOTE:	When ordering No. 133251, state width required.
134256	24490	Face Plate (lower half)
134257	24490	Face Plate (lower half) Gasket (cork)
134260	24493	Feed Bar Slide Block Oil Pad Retainer for 131944
134260	24489	Feed Connecting Rod Oil Pad Retainer for 131500
134260	24489	Feed Roll (lower) Connecting Rod Oil Pad Retainer for 131999
135377	-----	Bench Stand with 27998, 41538, two each 60656, 126849, three wood screws 1-1/4 in. No. 12, four wood screws 1-1/4 in. No. 10 and eight each wood screws 5/8 in. No. 6 and 5/8 in. No. 7, for Machine Base No. 147515, when Machine is mounted on top of table
138306	-----	Feed Eccentric Lubricating Pad (wood) for 54025
139017	24514	Arm Hole Plug Screw Washer
140219C	20633	Knee Lifter Rock Shaft Stop Dog Set Screw for 2770
140267F	24495	Feed Roll (lower) Clutch Shaft Oil Plug Screw for 131996
140275J	24498	Feed Dog Screw, when movable Needle Guard is used
140279AL	24495	Feed Roll (lower) Set Screw for 54457, 68058, 131728, 131979, 131993 and 131994.
140279AL	24494	Feed Roll (upper) Set Screw for 54481 and 68059
140409C	24495	Feed Roll (lower) Clutch Sleeve Set Screw for 147615
140443J	20727	Tension (upper thread) Bracket Screw
147501	-----	Feed Roll (lower) Connecting Rod 131999 with 54456, for 147516
147502	24494	Feed Roll (upper) Bar Bracket with 453AL, for 147503
147503	-----	Feed Roll (upper) Bar Bracket 147502 with 79C, 866D, 913W, 1330C, 1876, 23404, 38648, 54472, 54473, 127534, 127536, 127542, 147561 and two 208AL, for 147504
147504	-----	Feed Roll (upper) Bar Bracket complete, Nos. 54475 and 147503
147514	24512	Machine Base complete, for 147515 Nos. 131658, three each 9842, 51576E, 54477 and four each 131205 and 131279
147515	24512	Machine Base and Oil Drain Jar (swinging type) complete, for use with Bench Stand No. 135377, Nos. 131268 and 147514
147516	-----	Arm Rotary Shaft 131476 with 640E, 131111, 131502, 131930 and 147501
147519	24492	Cloth Plate Extension
147548	24498	Presser Foot Plate for 147551
	NOTE:	When ordering No. 147548 state gauge required.

From the library of: Superior Sewing Machine & Supply LLC

No.	Plate	Name
147549	24498	Presser Foot Shank with 665J, for 147551...
147550	24498	Presser Foot Thread Cutter for 147551.....
147551	24498	Presser Foot (hinged) complete, with Thread Cutter, for 3/32 in. to 1/2 in. gauges, Nos. 239J, 26276, 147548, 147549 and 147550 .....
	NOTE:	When ordering No. 147551, state gauge required.
147561	24494	Feed Roll (upper) Lifter for 147503 .....
147615	24495	Feed Roll (lower) Clutch Sleeve with two 140409C, for 131727.....
150058	24513	Thread Unwinder Thread Separator for 150061 .....
150060	24513	Thread Unwinder Thread Separator Bracket Arm with 164J and 9525, for 150061.....
150061	-----	Thread Unwinder Thread Separator complete, for 150062, Nos. 164J, 9525, 150058 and 150060 .....
150062	24513	Thread Unwinder complete, for four spools, Nos. 150061, 228767, 228768, 228772, 228774, two 228766, three wood screws 7/8 in. No. 12 and four each 150203, 228764 and 228769.....
150203	24513	Thread Unwinder Spool Rest Cushion (felt) for 150062.....
150451	20633	Foot Lifter Treadle Stand for 150452 .....
150452	20633	Treadle complete, Nos. 4879, 4882, 126249, 126250, 150451 and two wood screws 1 in. No. 16 F.H. .....
160712	24505	Hemmer Bracket with 10248, for 160716....
160713	24505	Hemmer Elastic Guide with 336J, for 160716
160714	24505	Hemmer Elastic Guide Spring for 160716....
160715	24505	Hemmer for 160716.....
160716	24505	Hemmer with Elastic Tension complete, for 7/32 in. to 3/8 in. gauges, Nos. 44209, 45869, 120630, 120631, 160712, 160713, 160714, 160715 and two each 337J, 3146 and 51097J .....
	NOTE:	When ordering No. 160716, state gauge required.
164197	24511	Wrench for 51715 (not regularly furnished) Accessories .....
201254C	24513	Thread Unwinder Spool Rest Set Screw for 228766 .....
225390	24513	Thread Unwinder Thread Cone Holder, for inverted cones .....
	NOTE:	No. 225390 is used with, but not included in 150062.
228764	24513	Thread Unwinder Spool Pin for 150062.....
228766	24513	Thread Unwinder Spool Rest (for two spools) with 201254C, for 150062.....
228767	24513	Thread Unwinder Spool Rest Rod for 150062.
228768	24513	Thread Unwinder Spool Stand for 150062 ....
228769	24513	Thread Unwinder Thread Guide for 150062 ..

From the library of: Superior Sewing Machine & Supply LLC

No.	Plate	Name
228772	24513	Thread Unwinder Thread Guide Holder for 150062.....
228774	24513	Thread Unwinder Thread Guide Rod for 150062.....

SINGER Needles should be used
in SINGER Machines
These Needles and their Containers
are marked with the
Company's Trademark "SIMANCO" 1

Needles in Containers marked
"FOR SINGER MACHINES"
are NOT SINGER made needles 2

20633 - 1/4

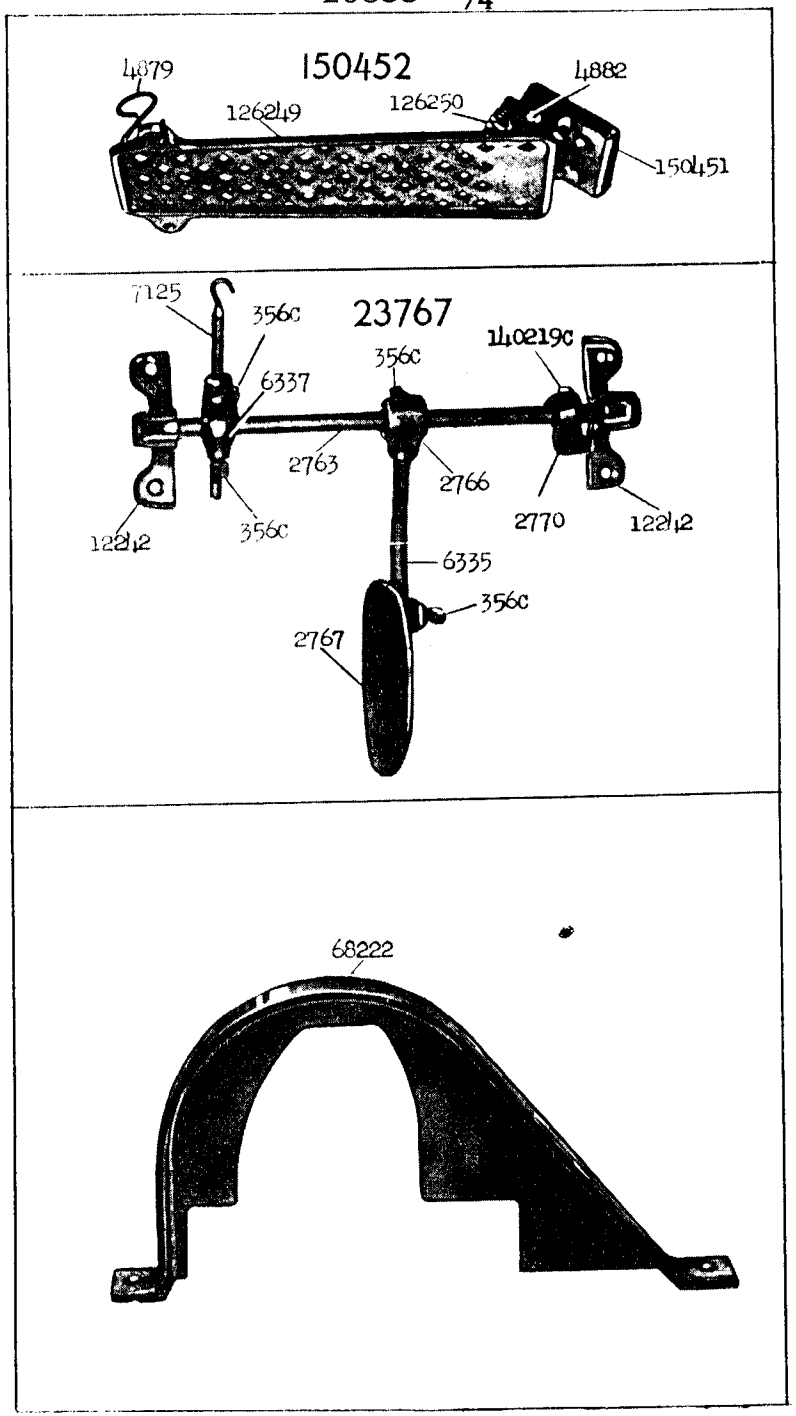

From the library of: Superior Sewing Machine & Supply LLC

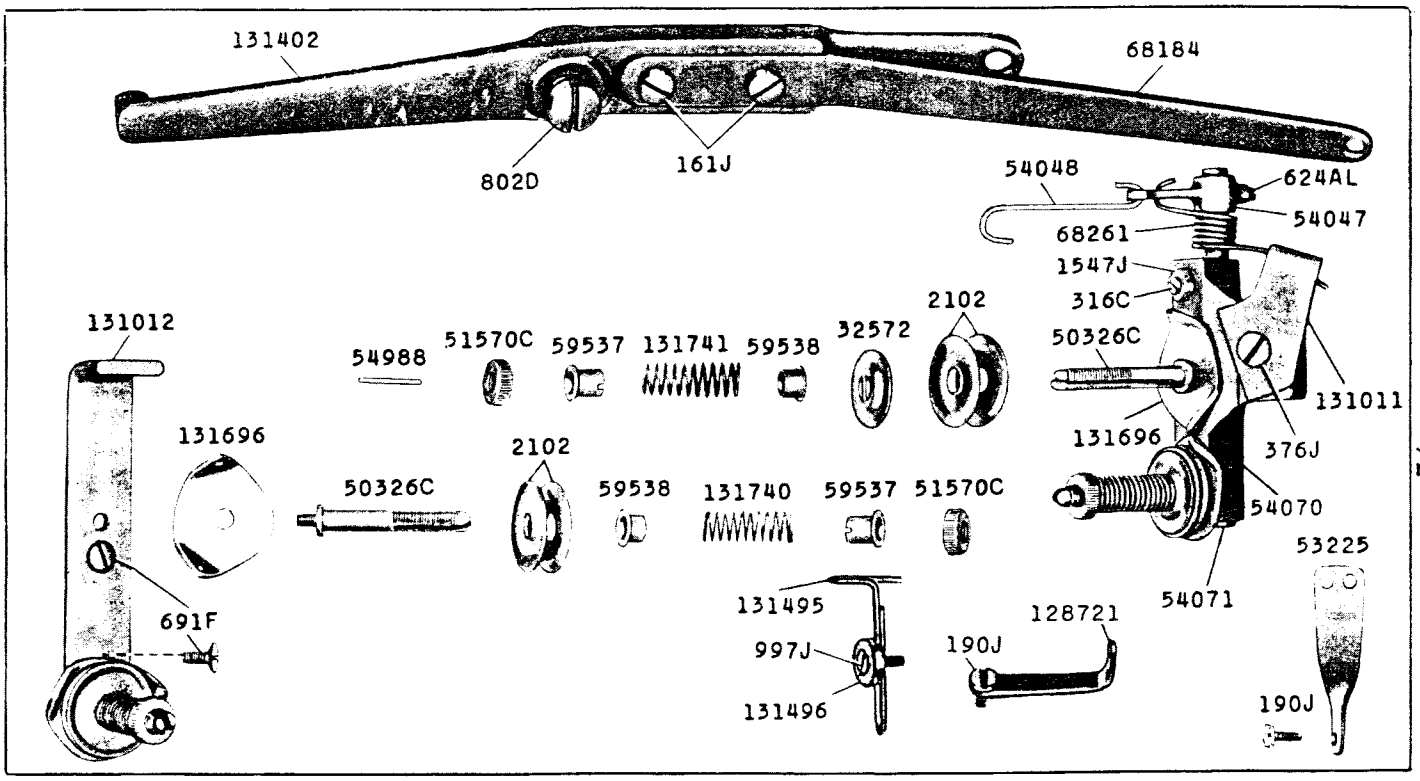

20727 - 1/2

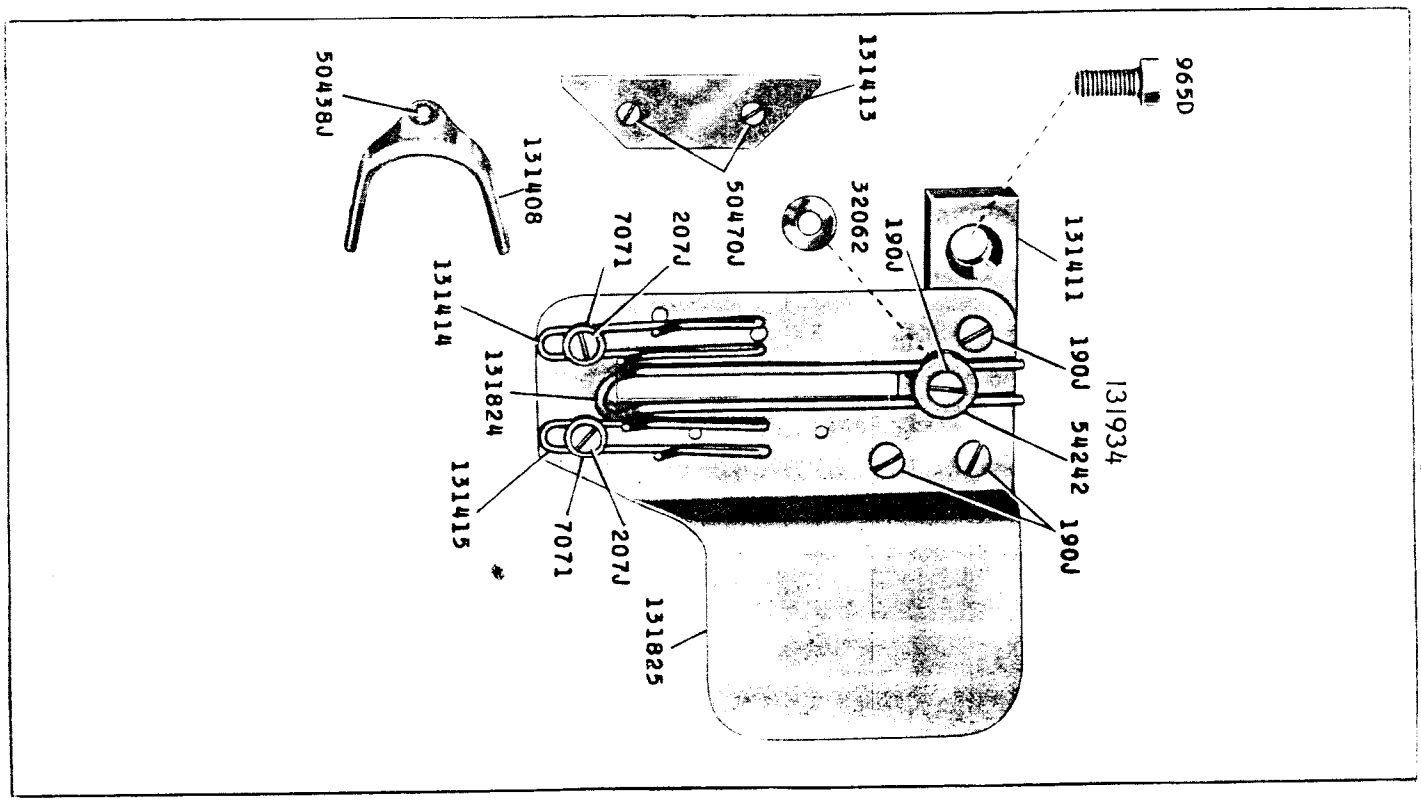

20728 - 2/3

From the library of: Superior Sewing Machine & Supply LLC

20747 - 2/3

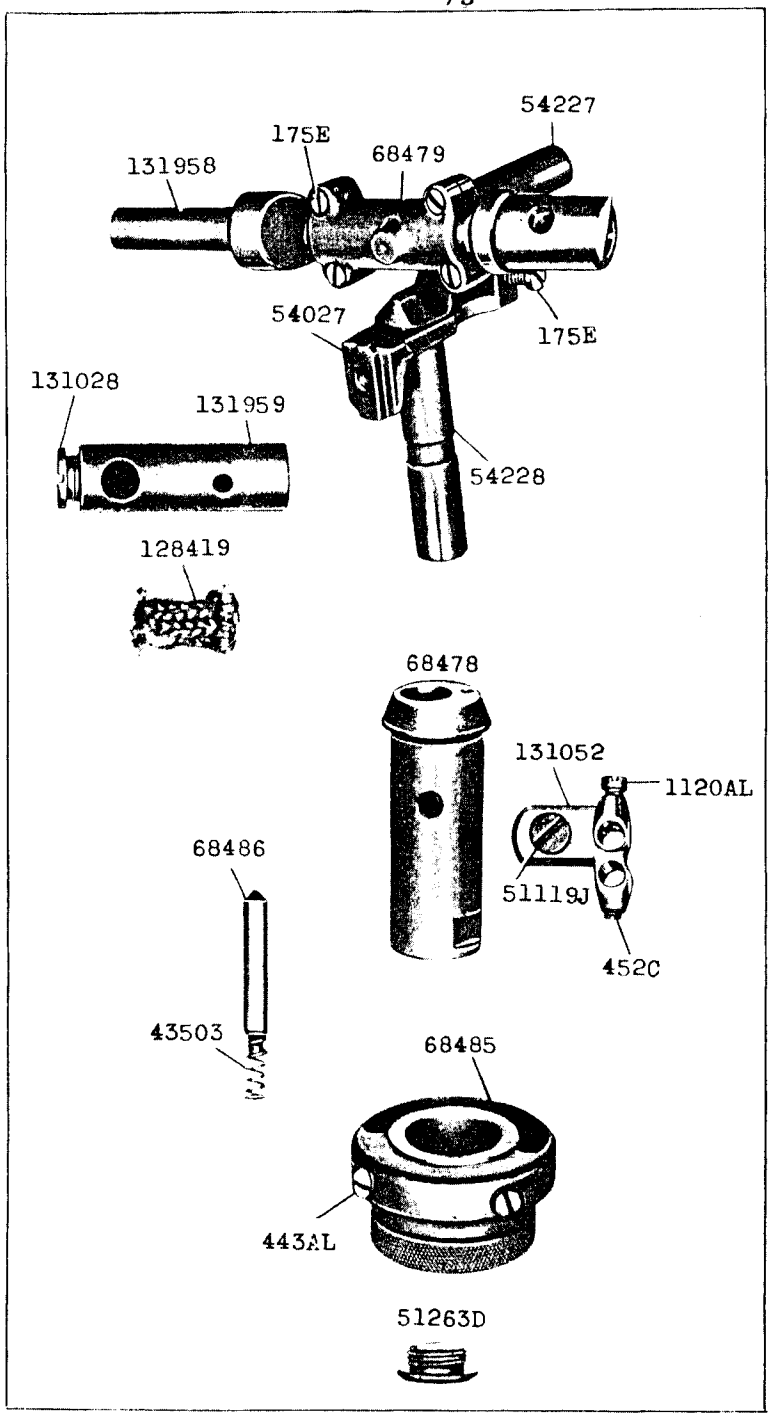

24488-1/2

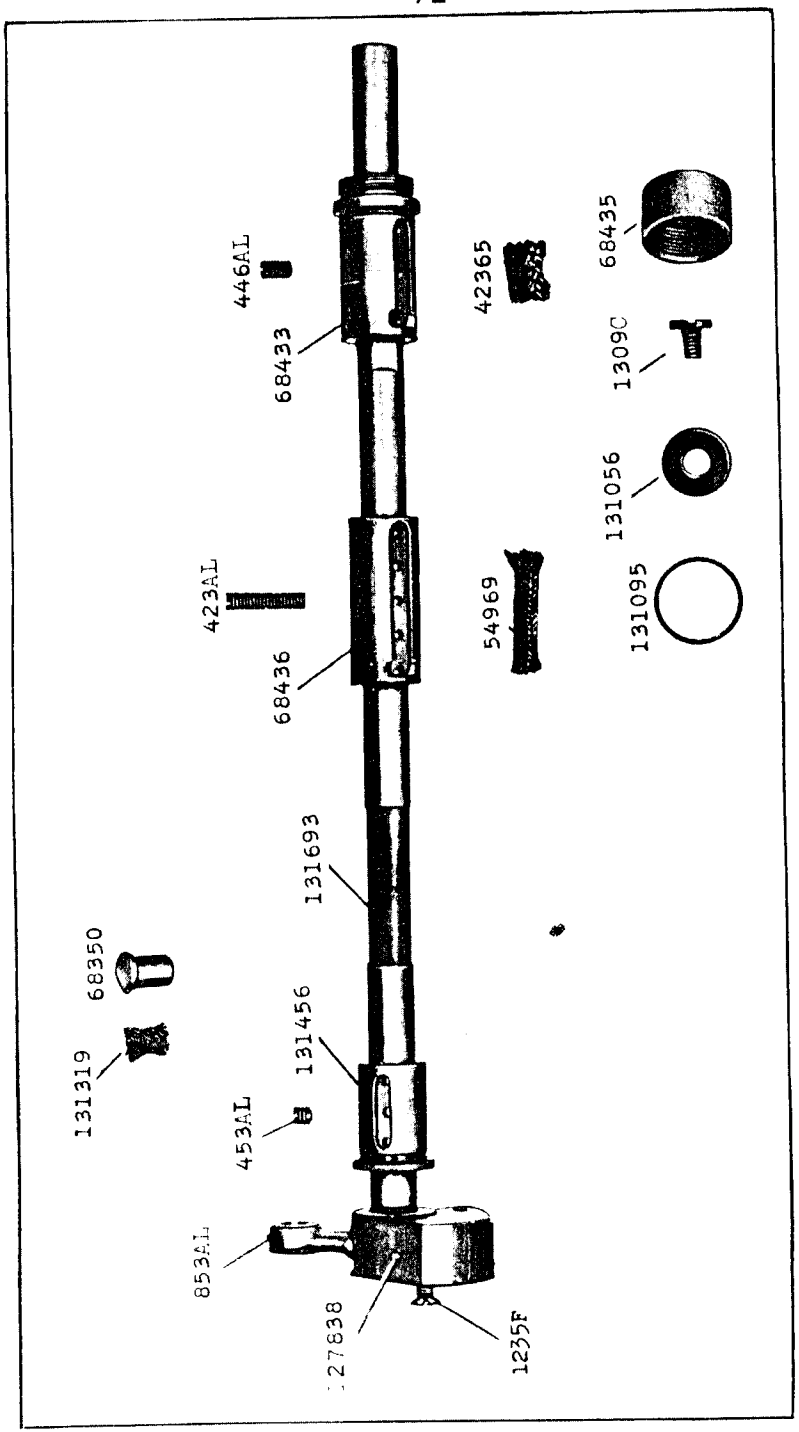

From the library of: Superior Sewing Machine & Supply LLC

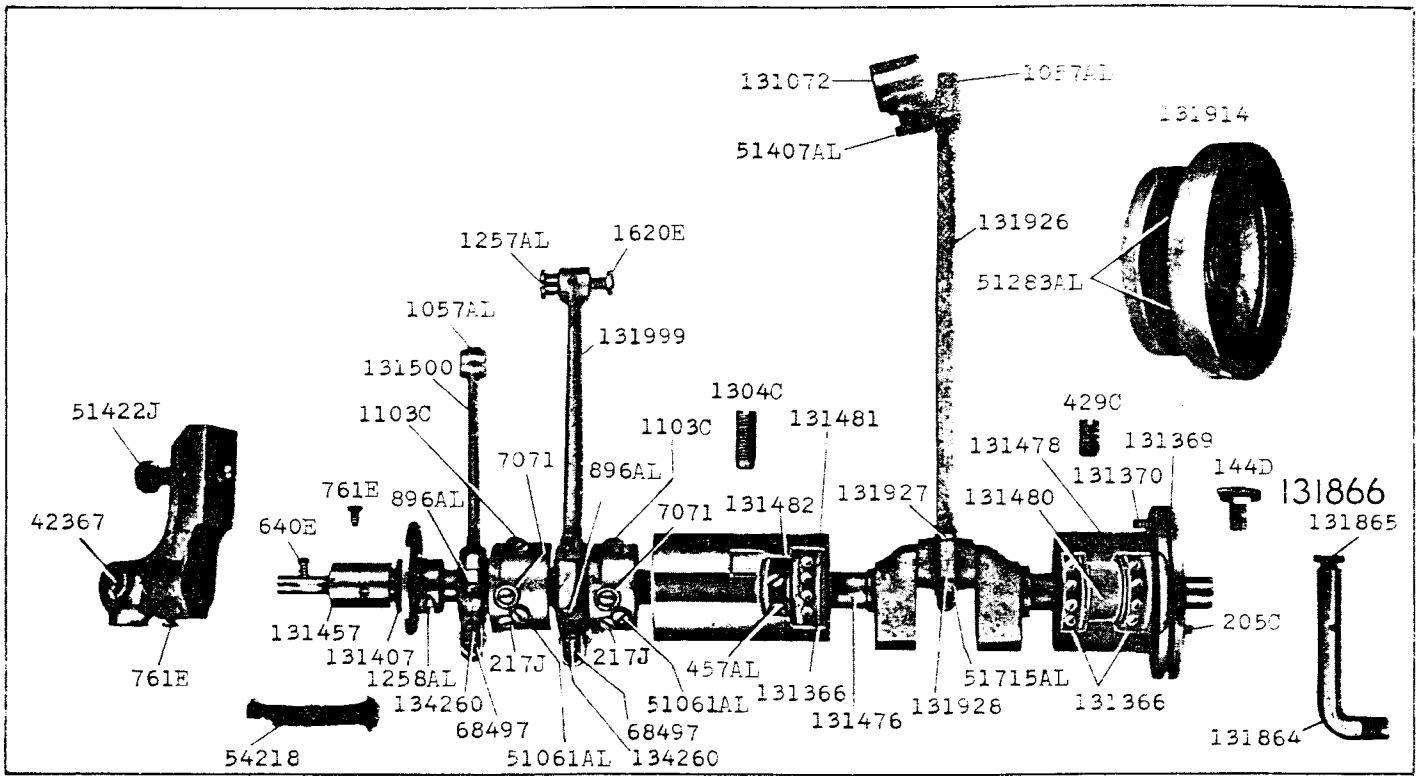

24489-1/3

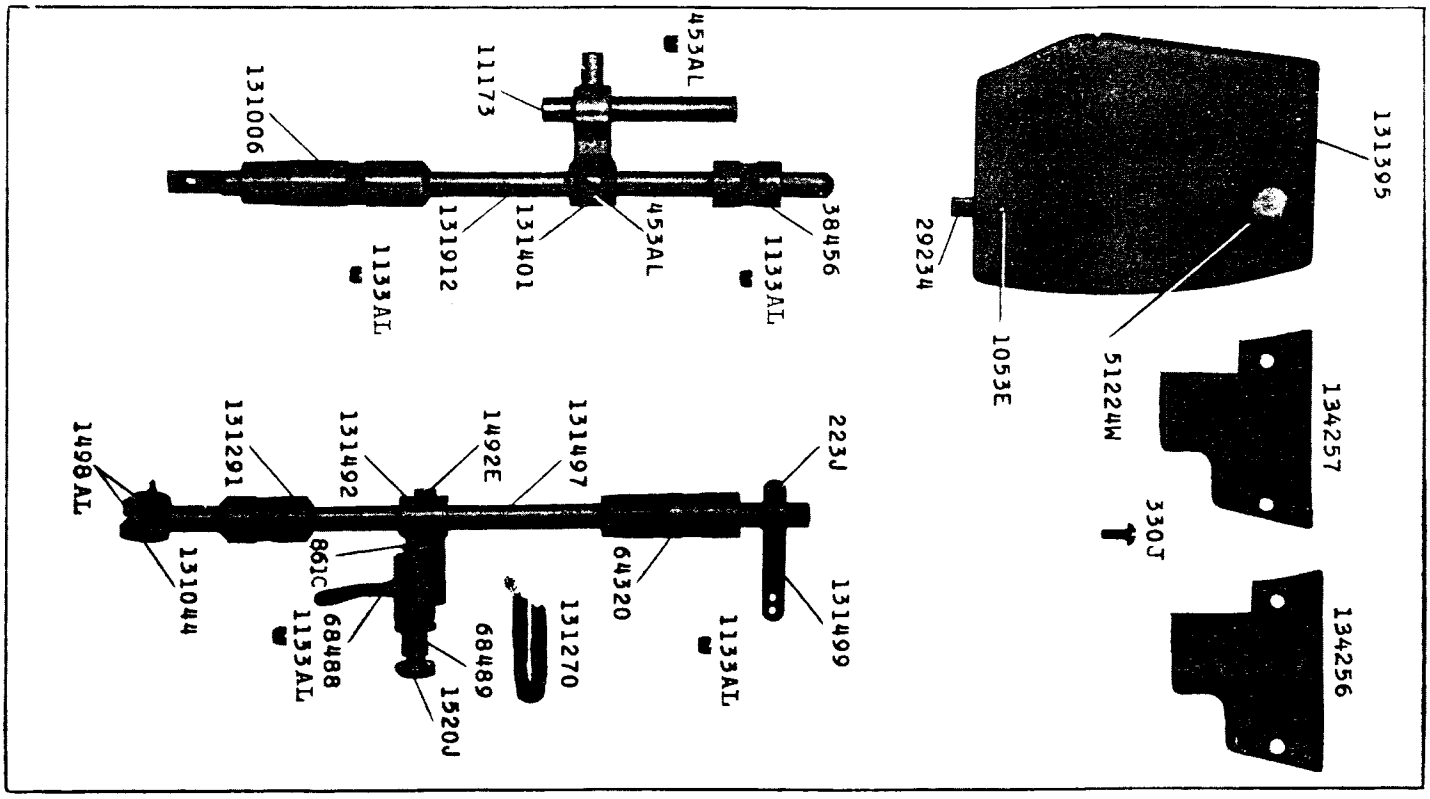

24490-1/2

From the library of: Superior Sewing Machine & Supply LLC

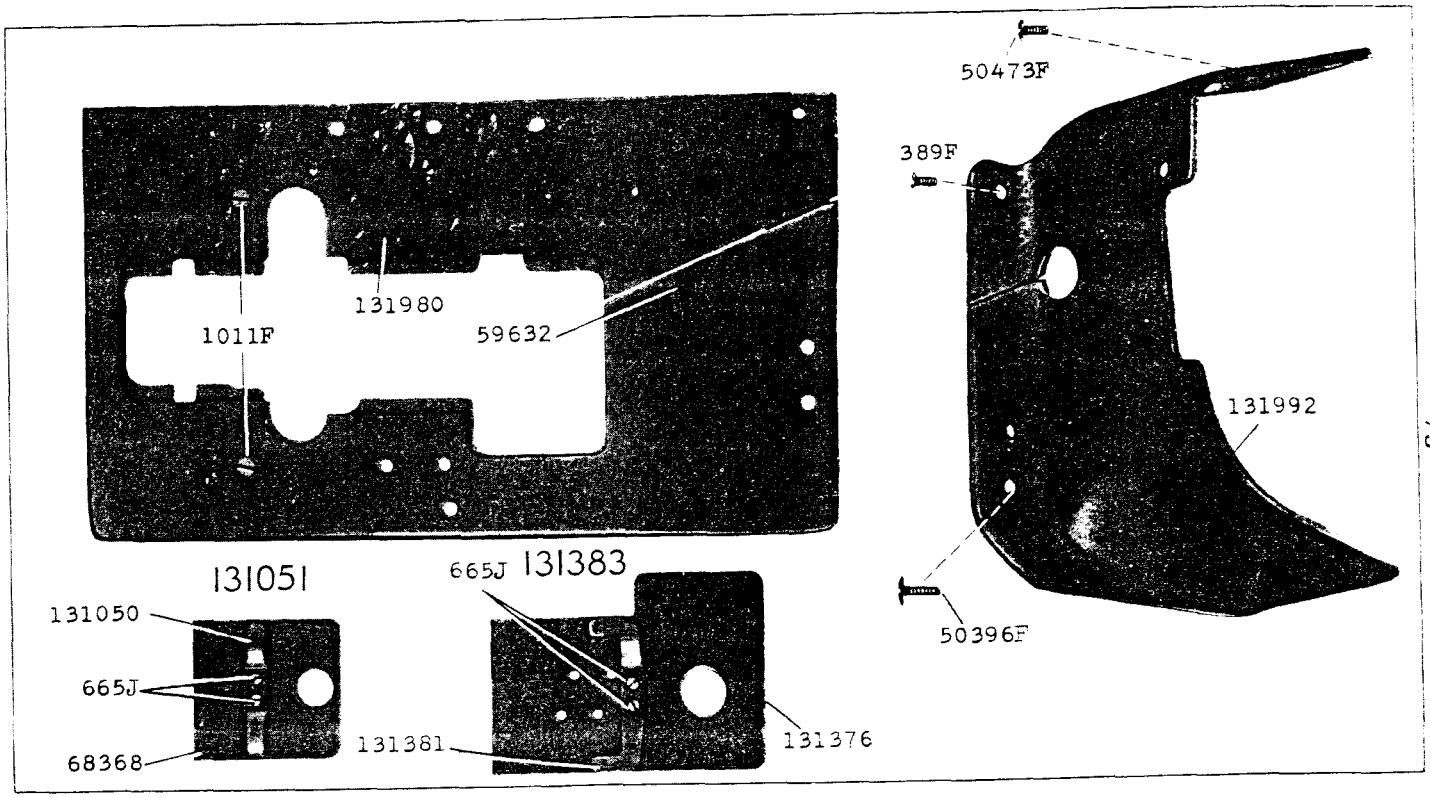

24491-1/3

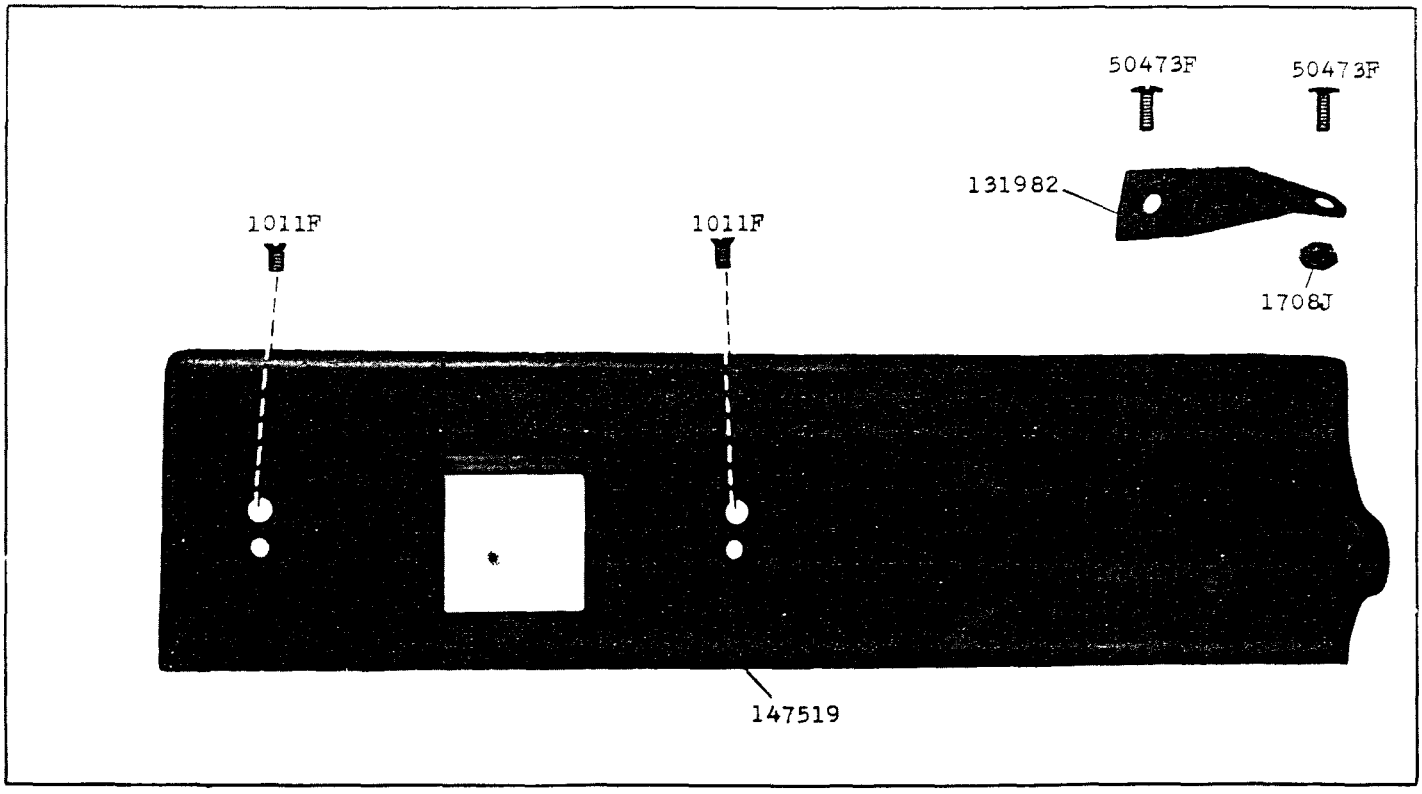

24492-1/2

From the library of: Superior Sewing Machine & Supply LLC

24493-½

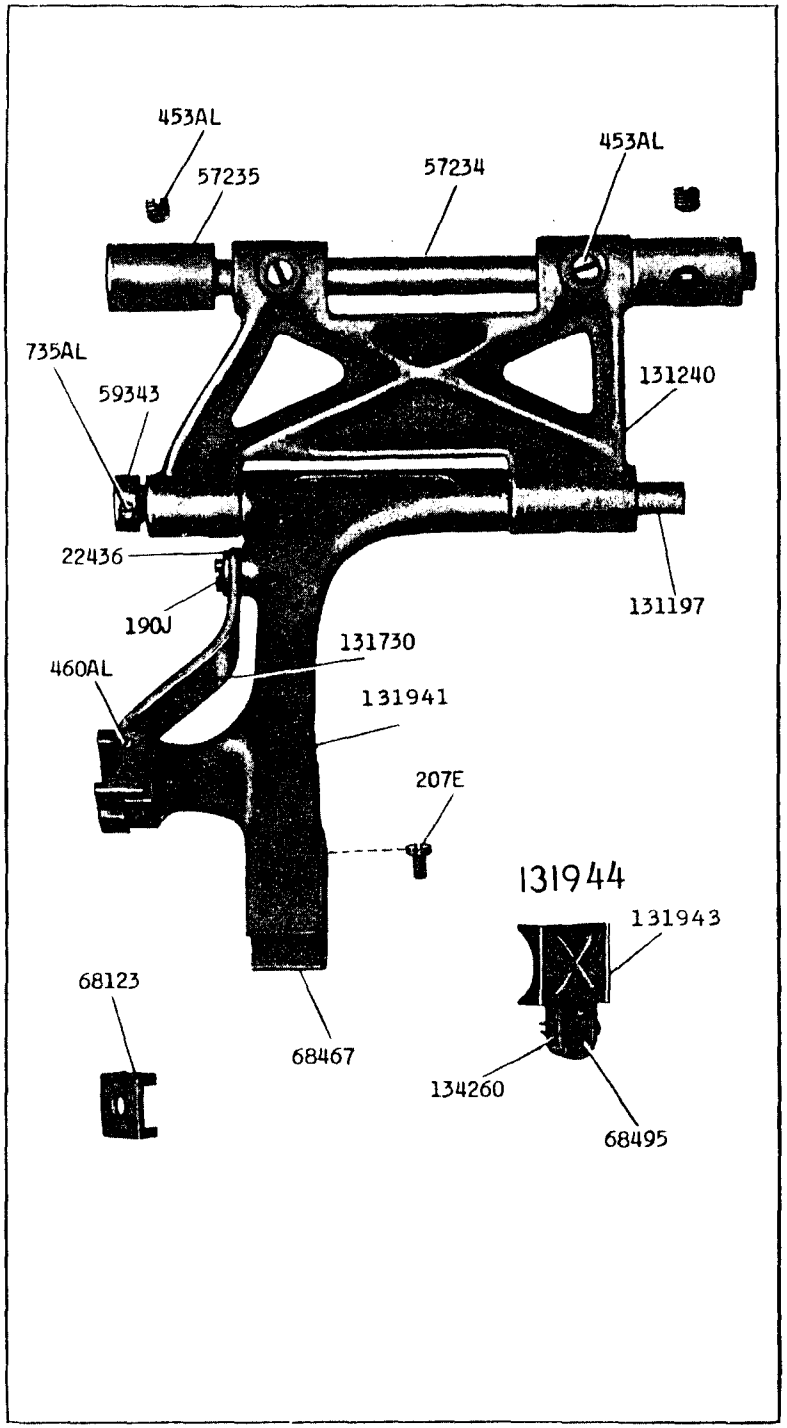

24494-½

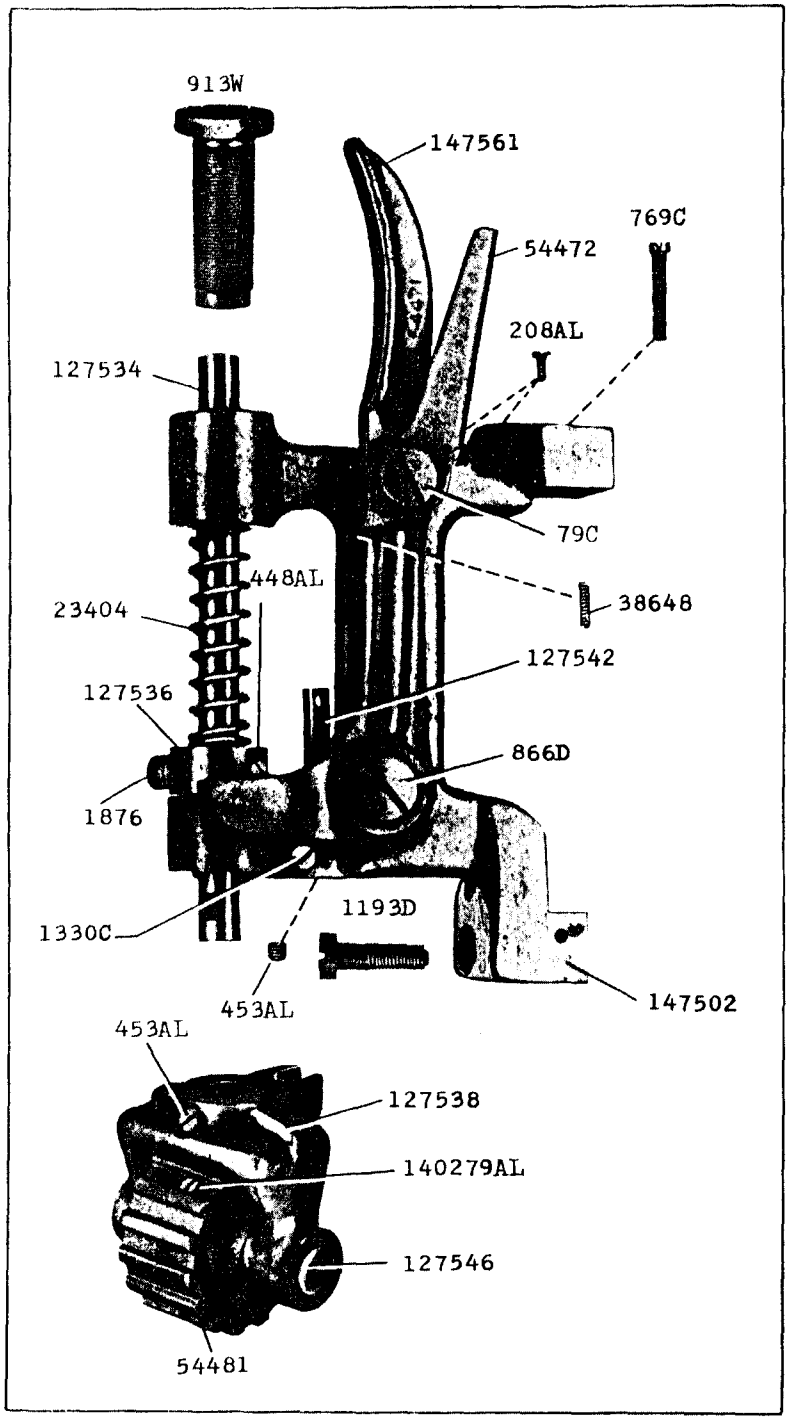

From the library of: Superior Sewing Machine & Supply LLC

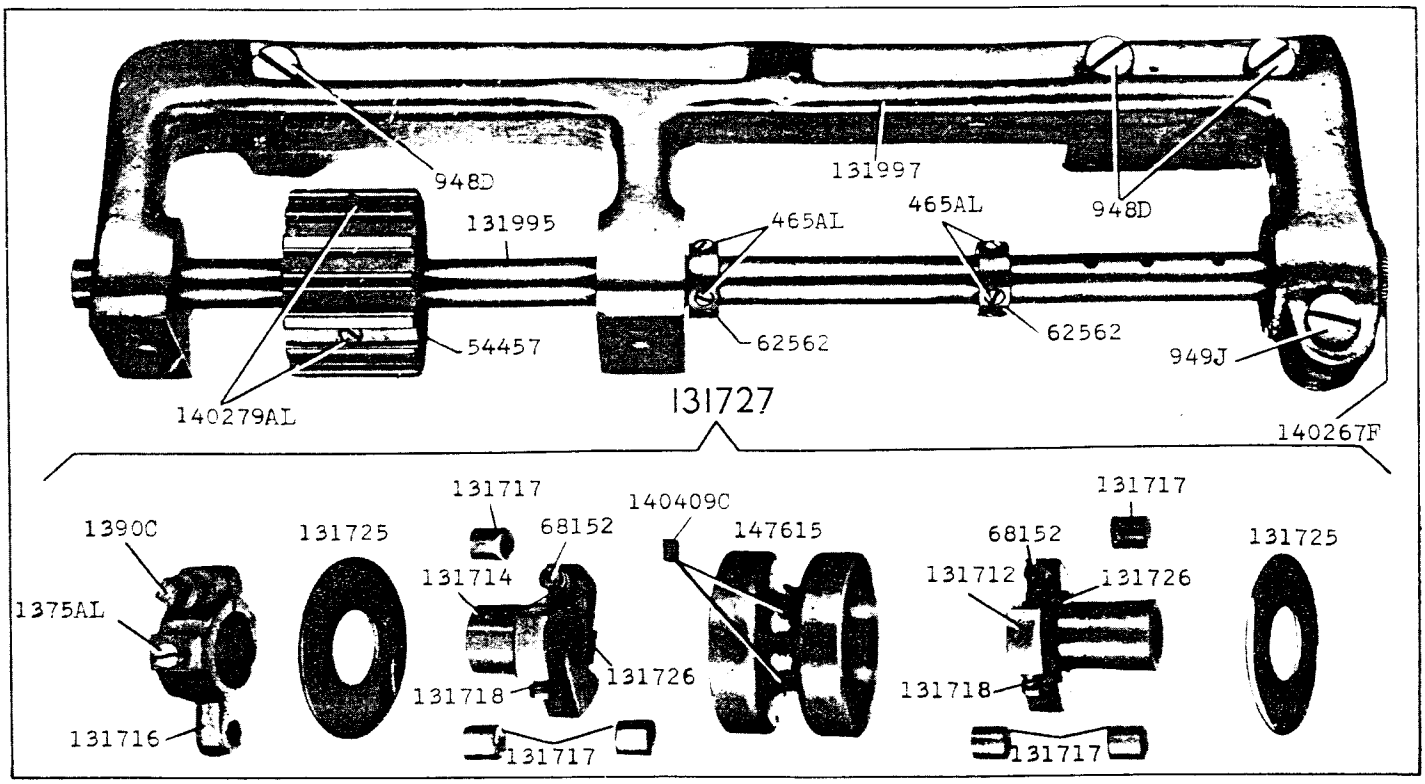

24495-½

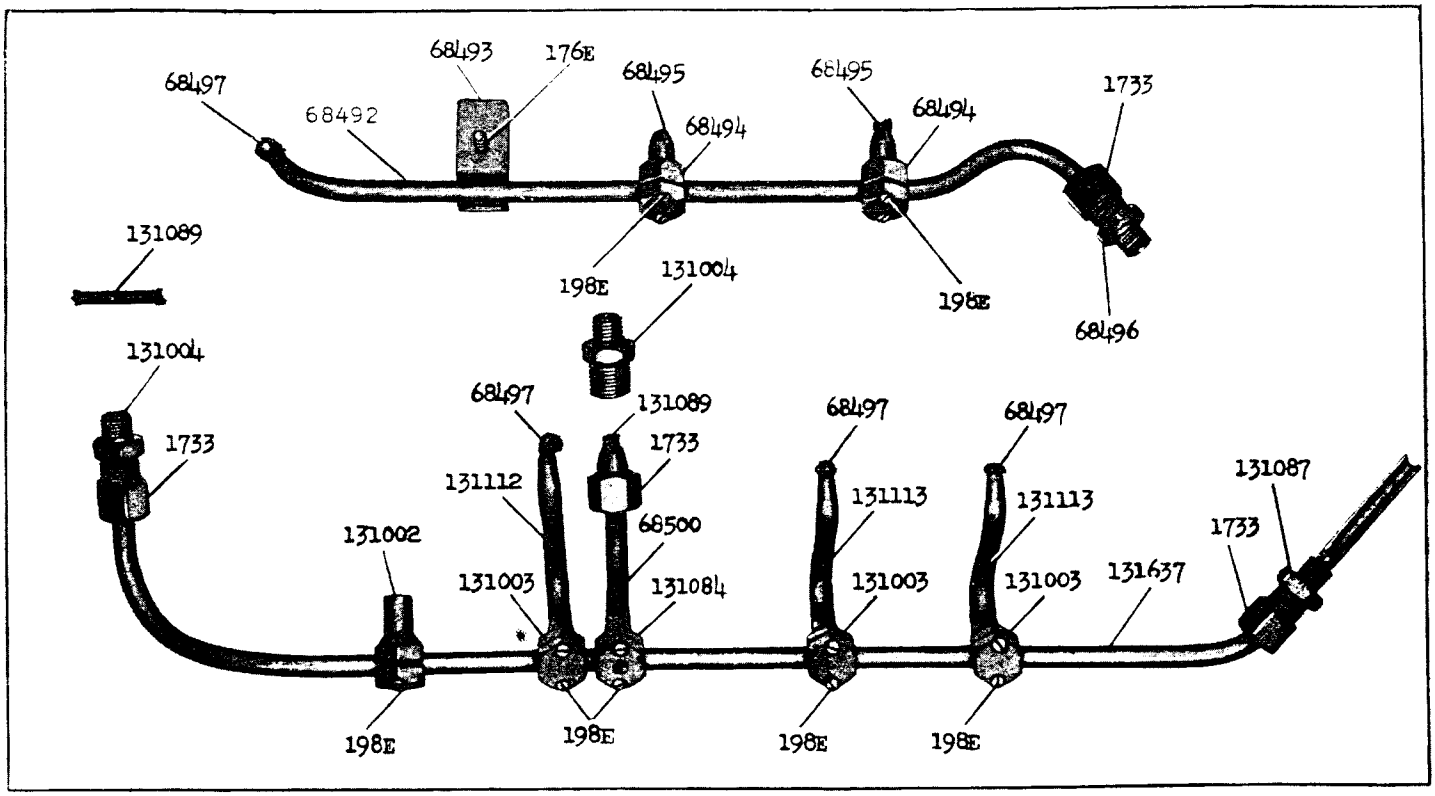

24496-½

From the library of: Superior Sewing Machine & Supply LLC

24497-2/3

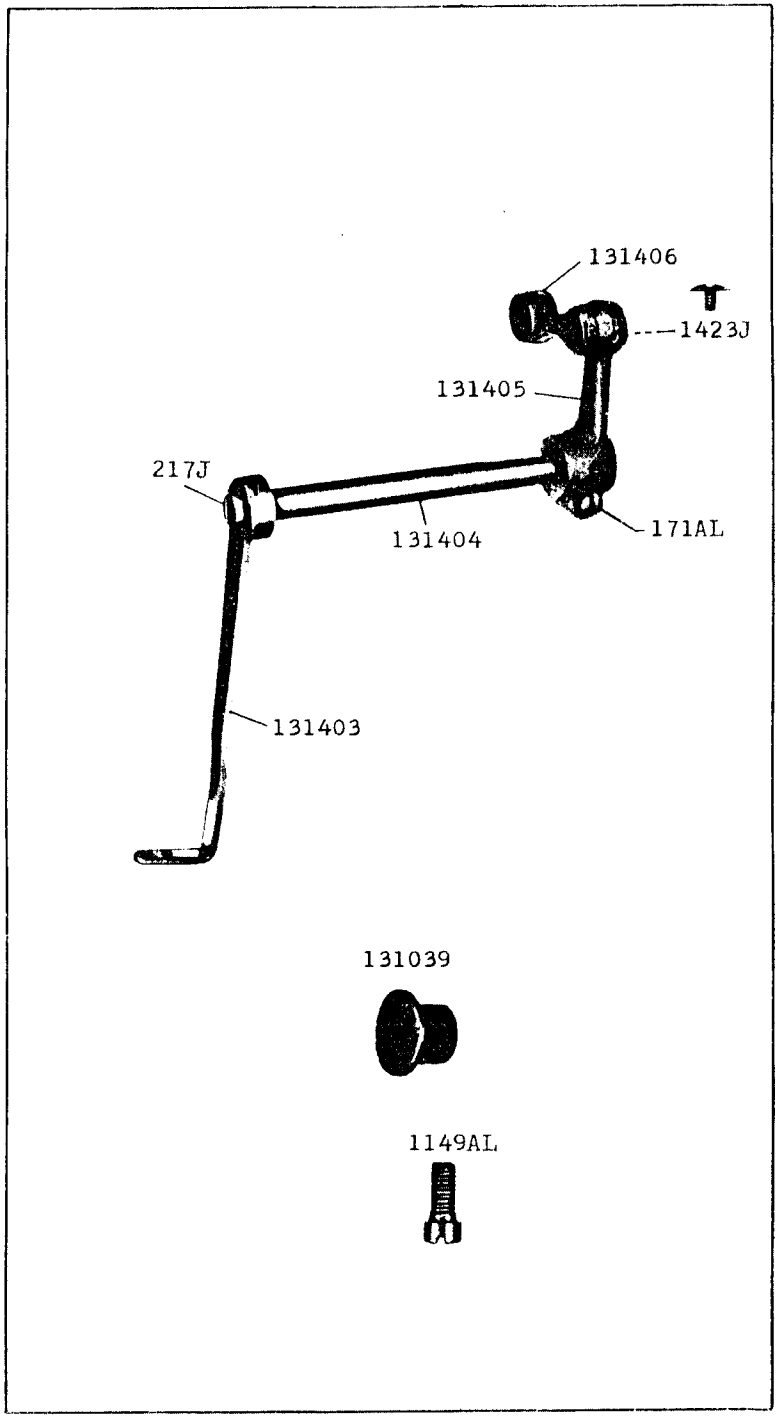

24498-2/3

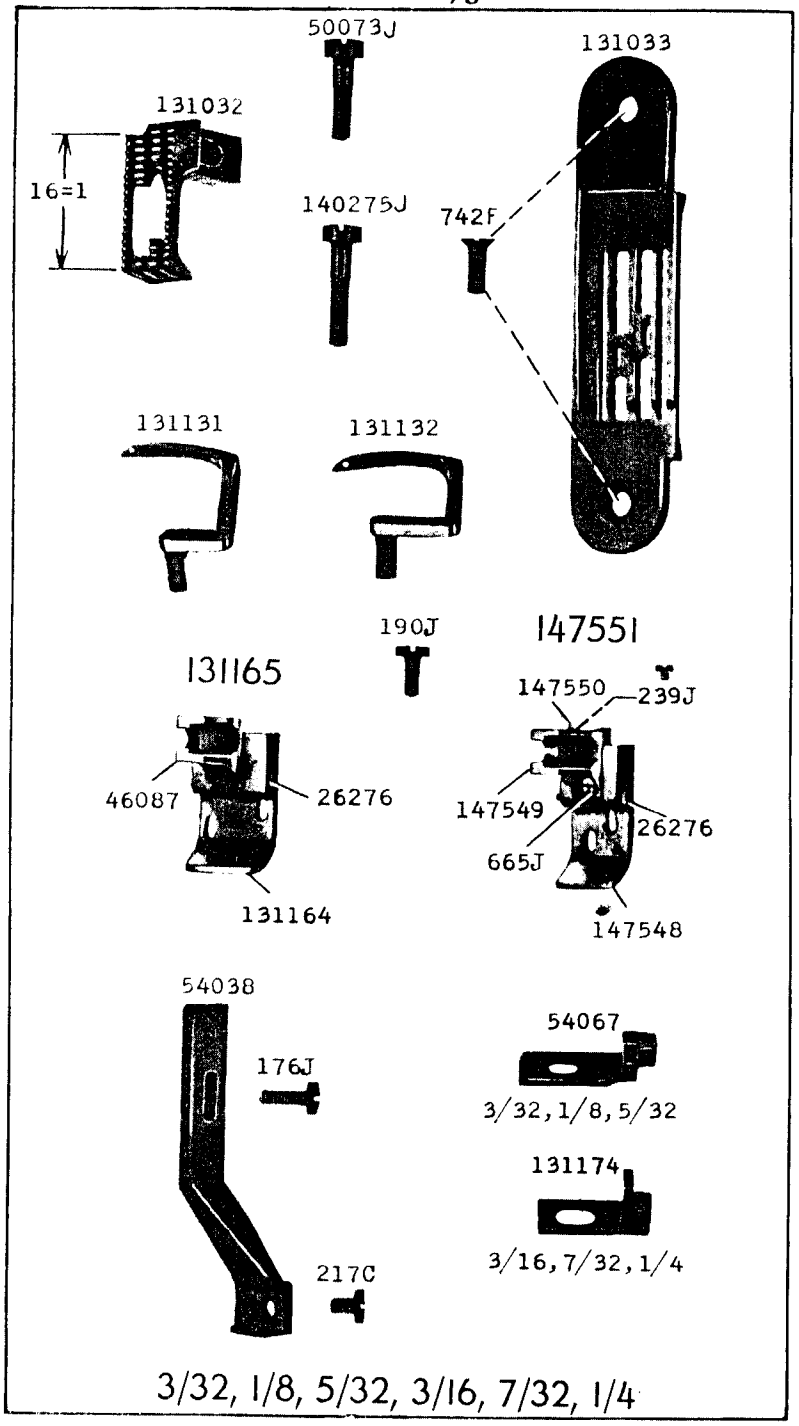

From the library of: Superior Sewing Machine & Supply LLC

24499-2/3

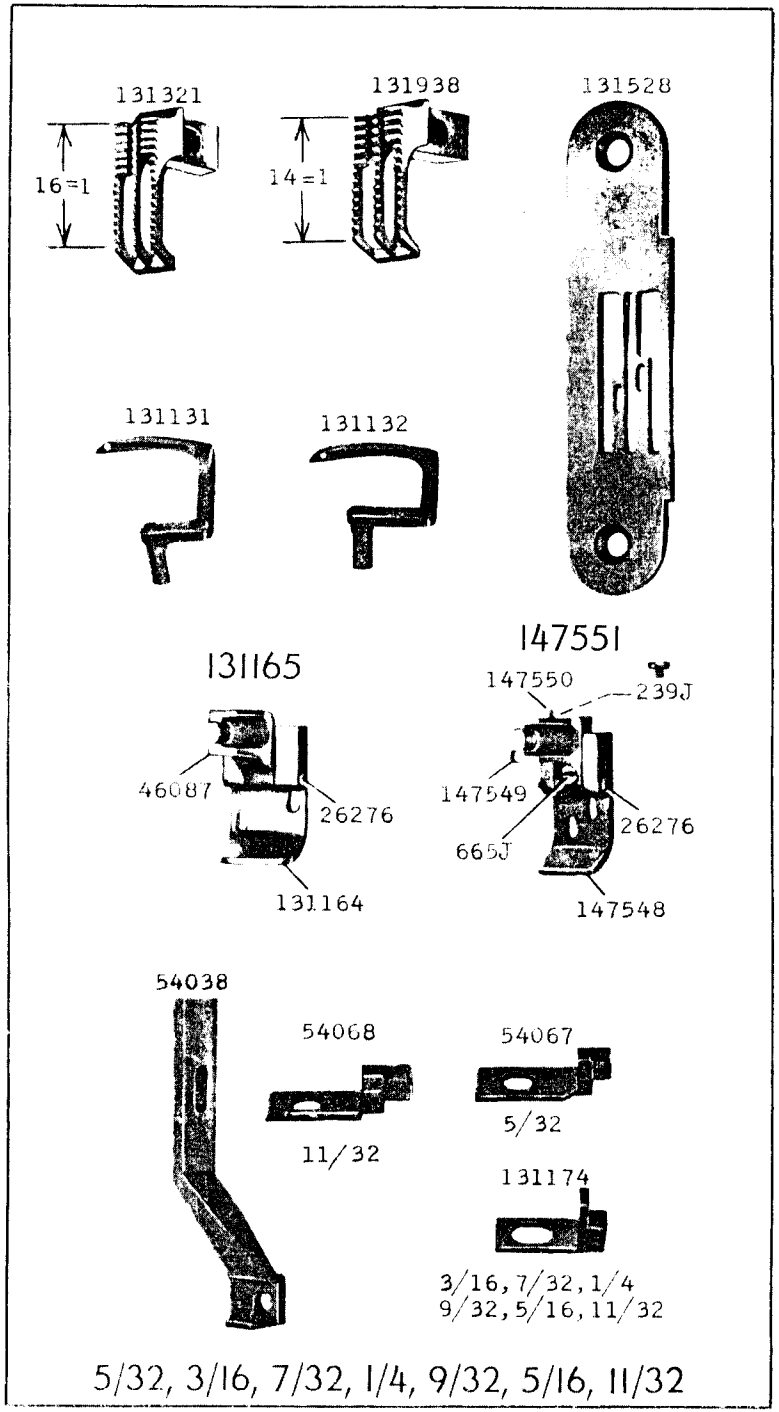

5/32, 3/16, 7/32, 1/4, 9/32, 5/16, 11/32

24500-2/3

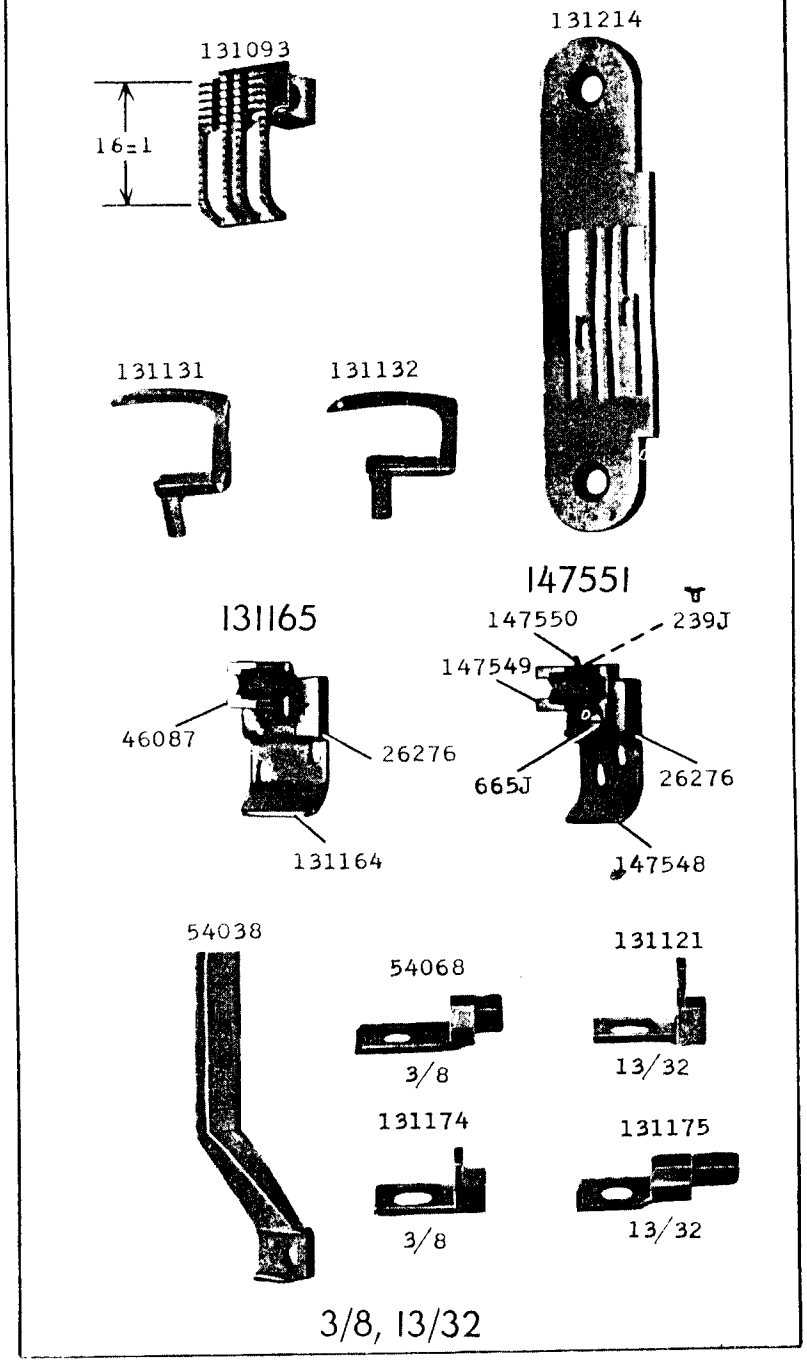

3/8, 13/32

From the library of: Superior Sewing Machine & Supply LLC

24501-2/3

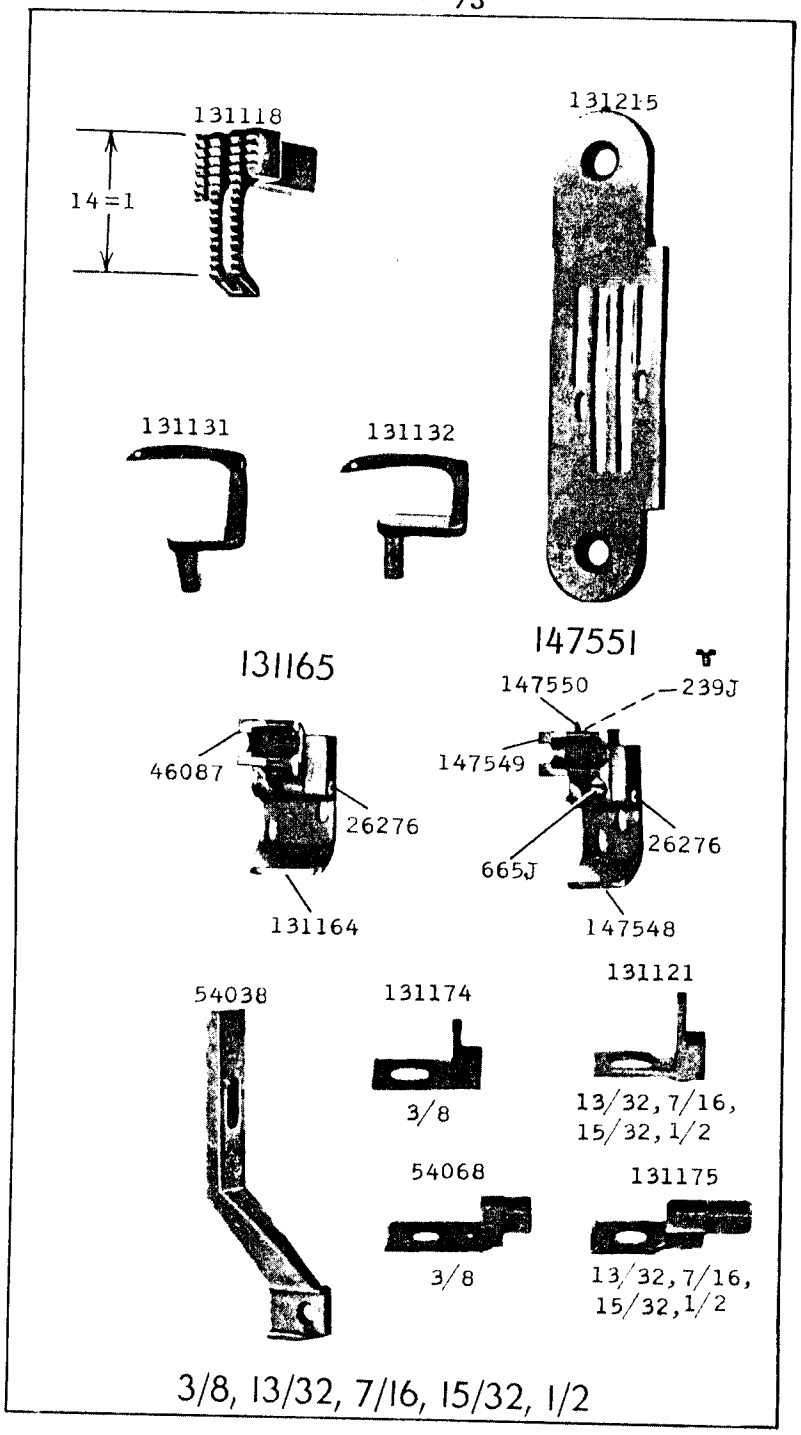

3/8, 13/32, 7/16, 15/32, 1/2

24502-2/3

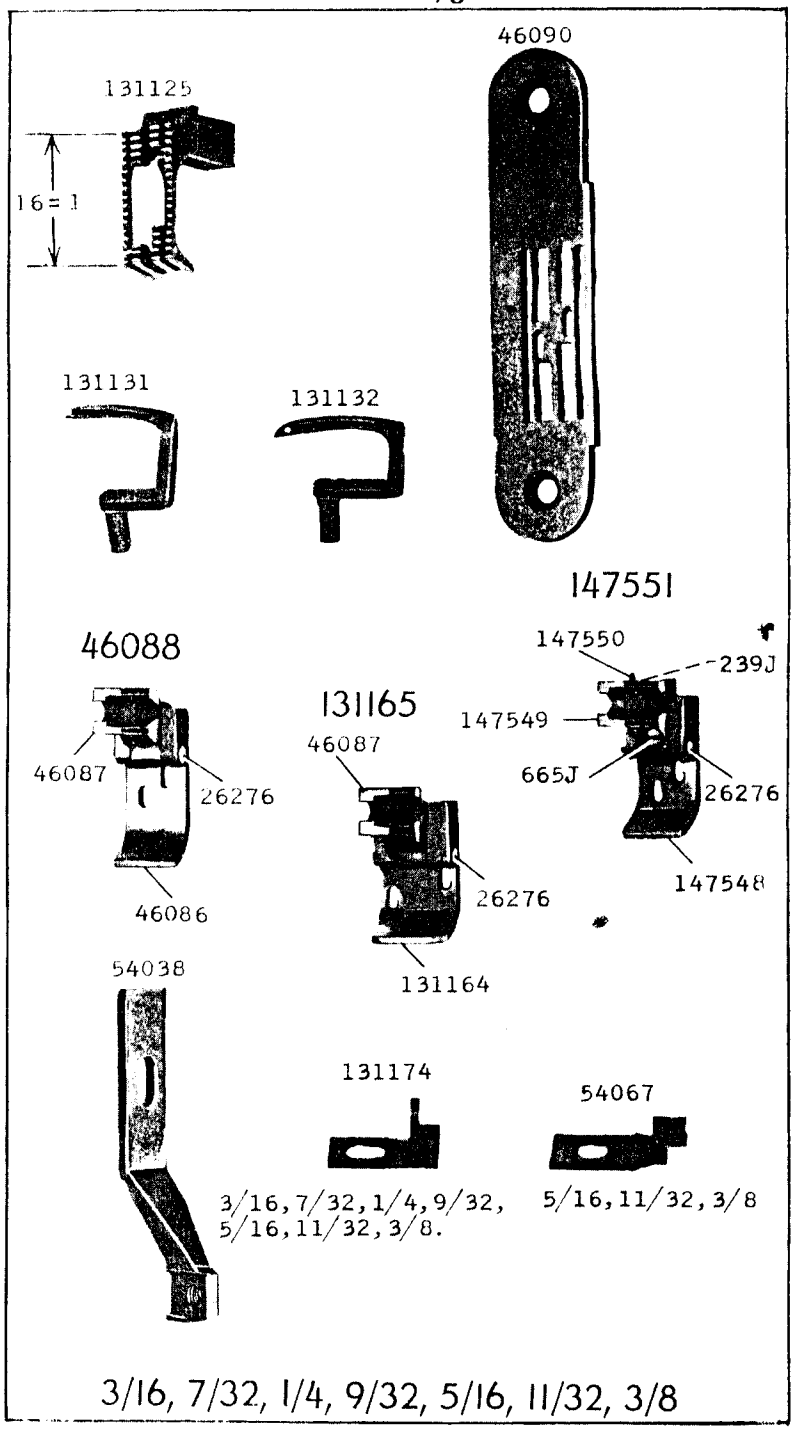

3/16, 7/32, 1/4, 9/32, 5/16, 11/32, 3/8

From the library of: Superior Sewing Machine & Supply LLC

24503-2/3

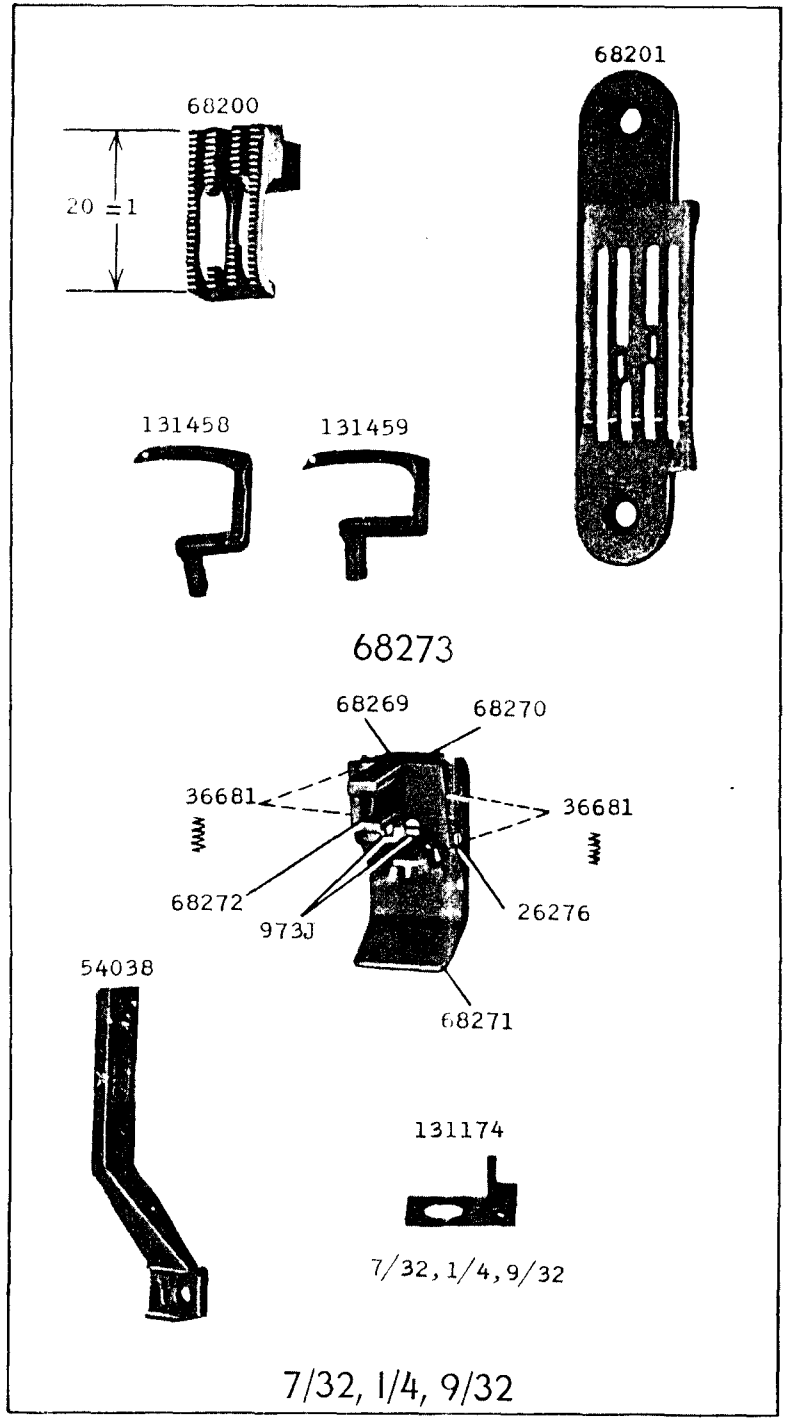

7/32, 1/4, 9/32

24504-2/3

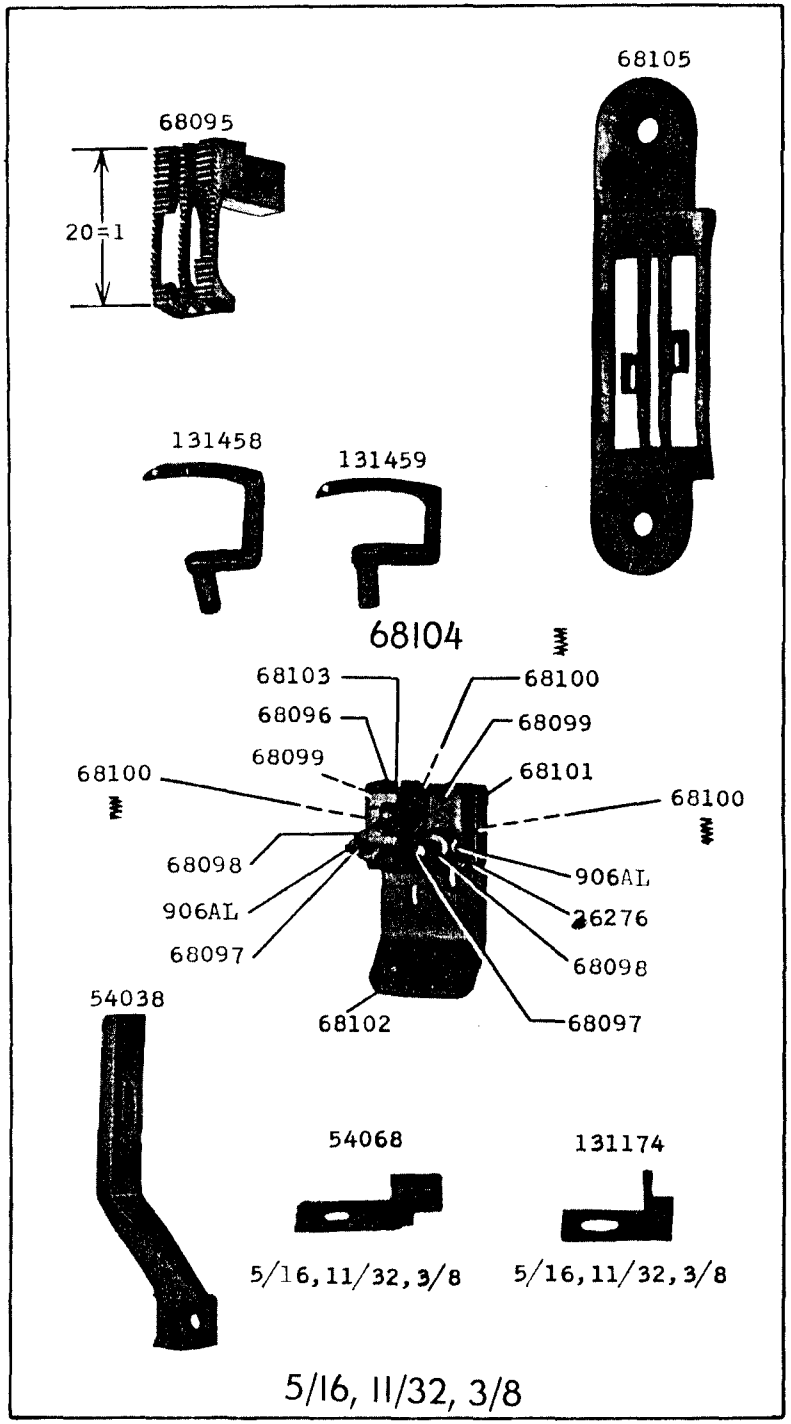

5/16, 11/32, 3/8

From the library of: Superior Sewing Machine & Supply LLC

24505-2/3

160716

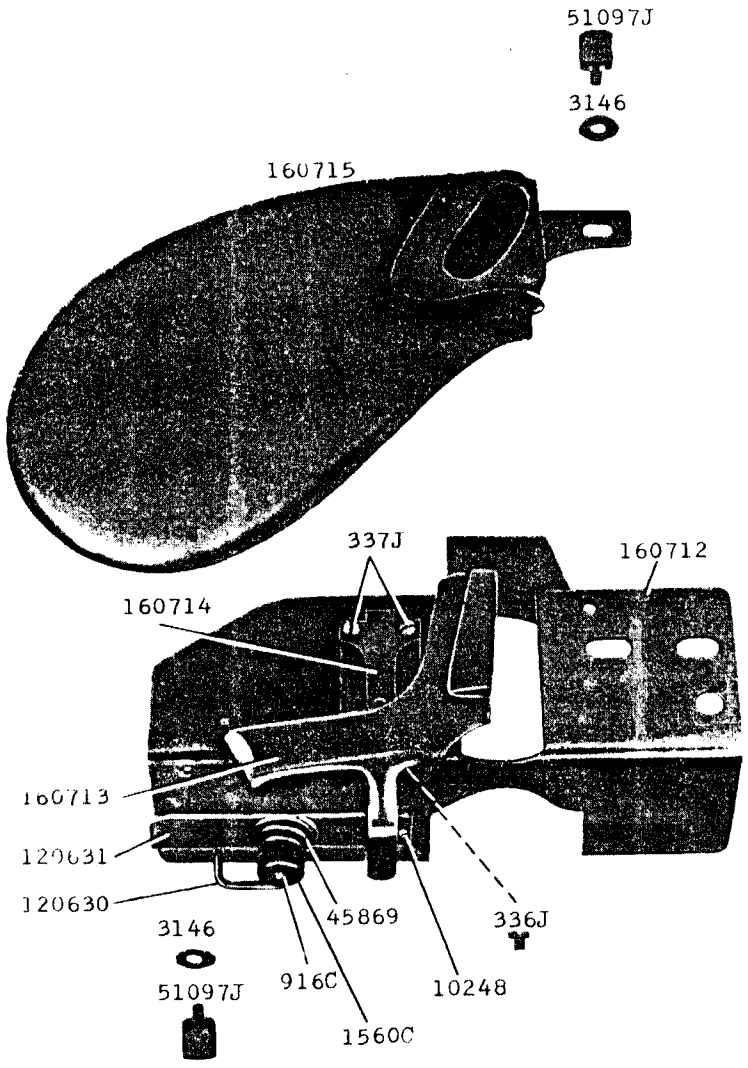

7/32, 1/4, 9/32, 5/16, 11/32, 3/8

24506-2/3

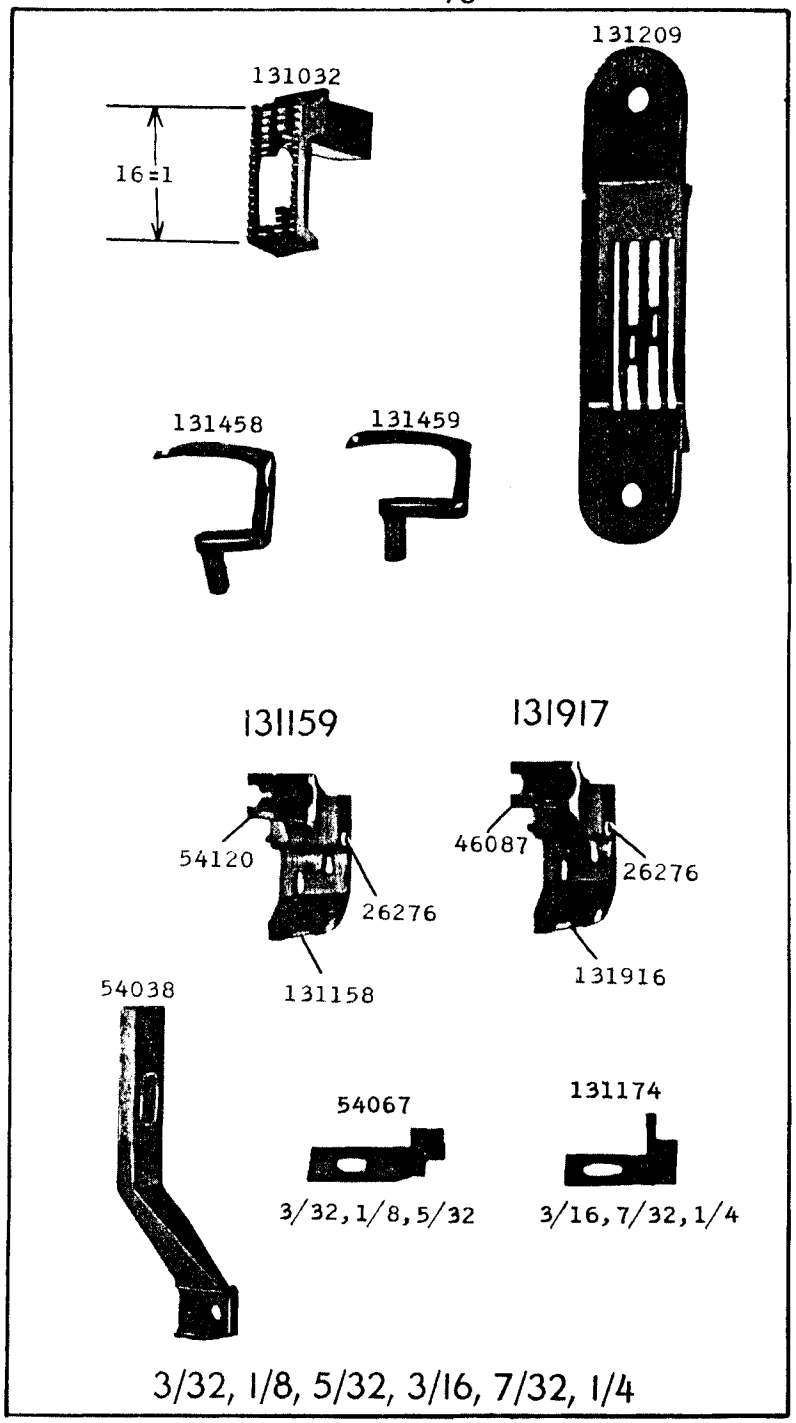

3/32, 1/8, 5/32, 3/16, 7/32, 1/4

From the library of: Superior Sewing Machine & Supply LLC

24507-2/3

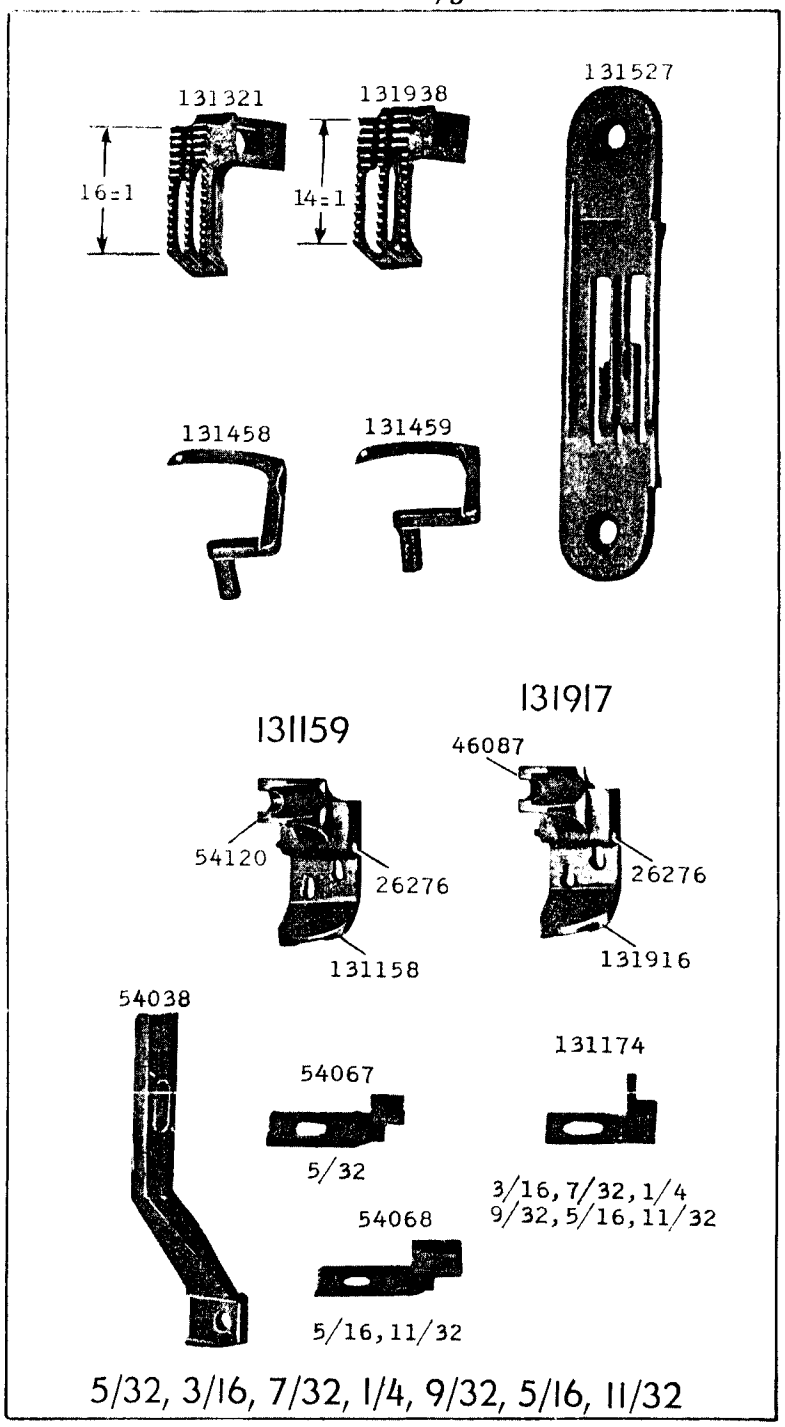

5/32, 3/16, 7/32, 1/4, 9/32, 5/16, 11/32

24508-2/3

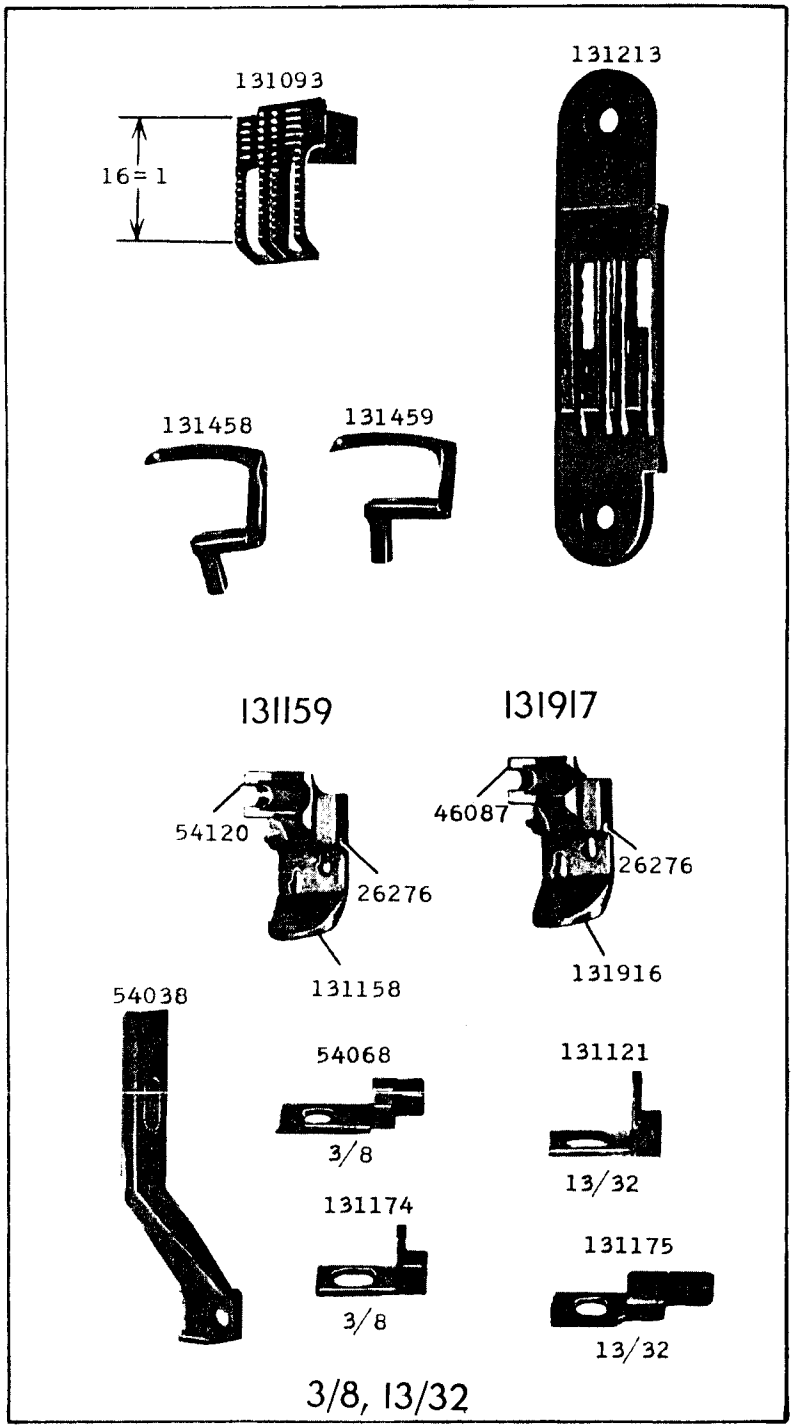

3/8, 13/32

From the library of: Superior Sewing Machine & Supply LLC

24509-2/3

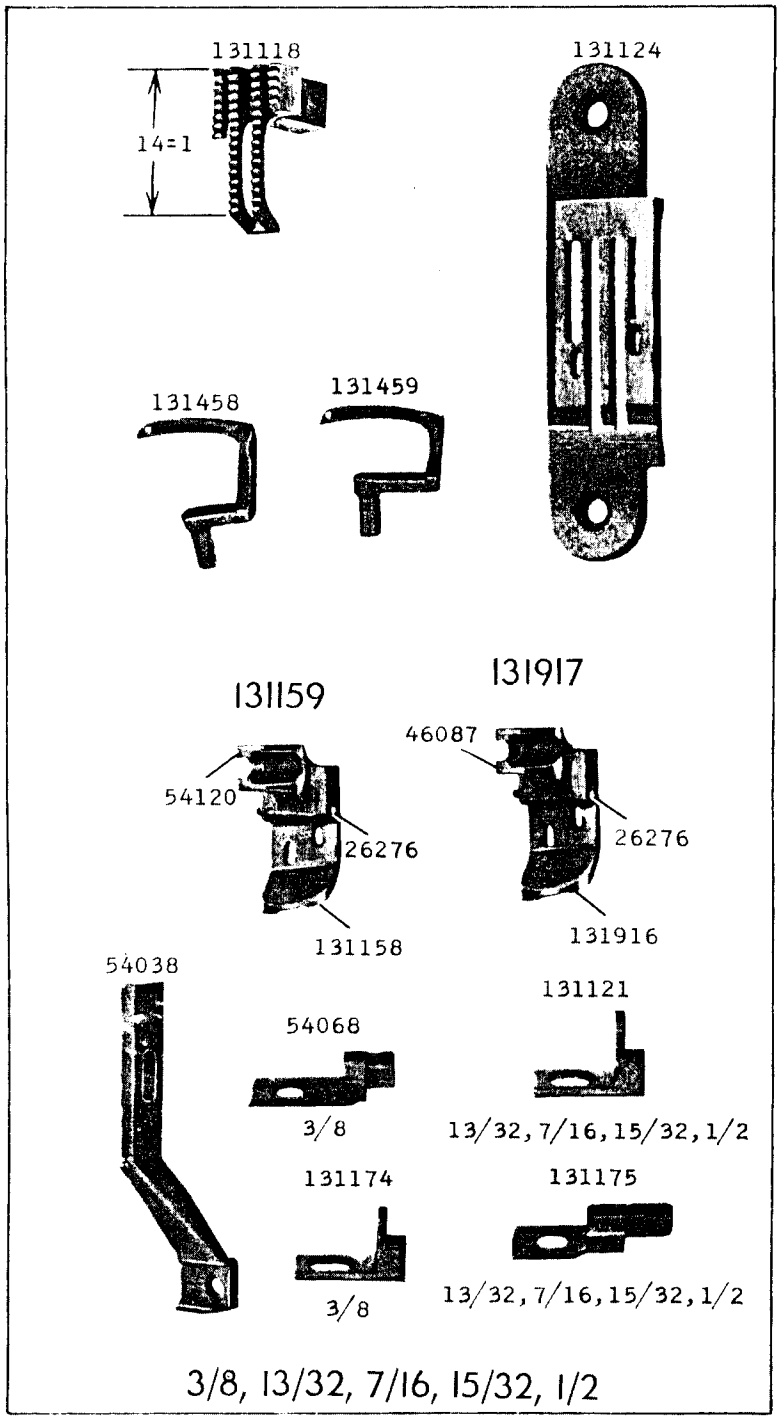

3/8, 13/32, 7/16, 15/32, 1/2

24510-2/3

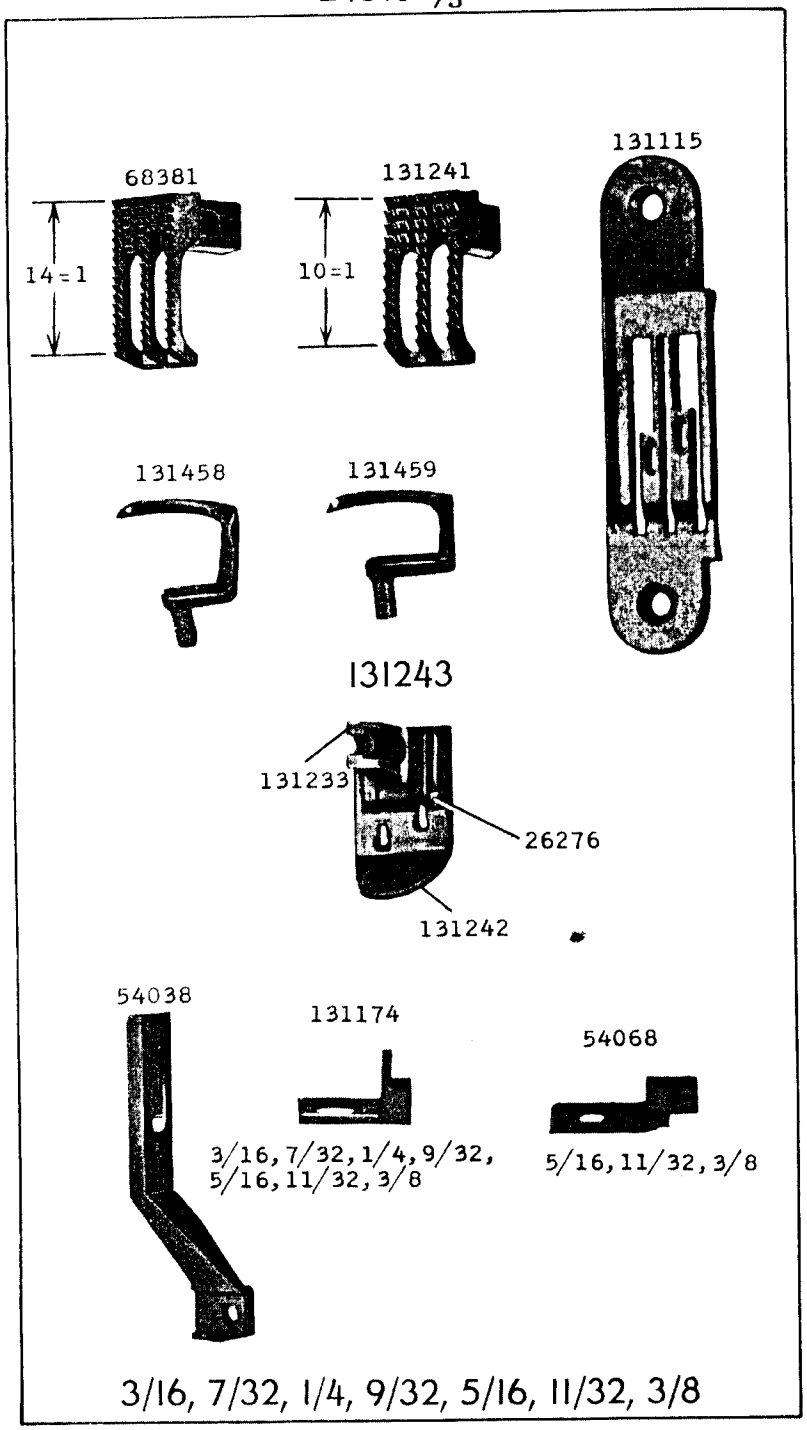

3/16, 7/32, 1/4, 9/32, 5/16, 11/32, 3/8

From the library of: Superior Sewing Machine & Supply LLC

24511-½

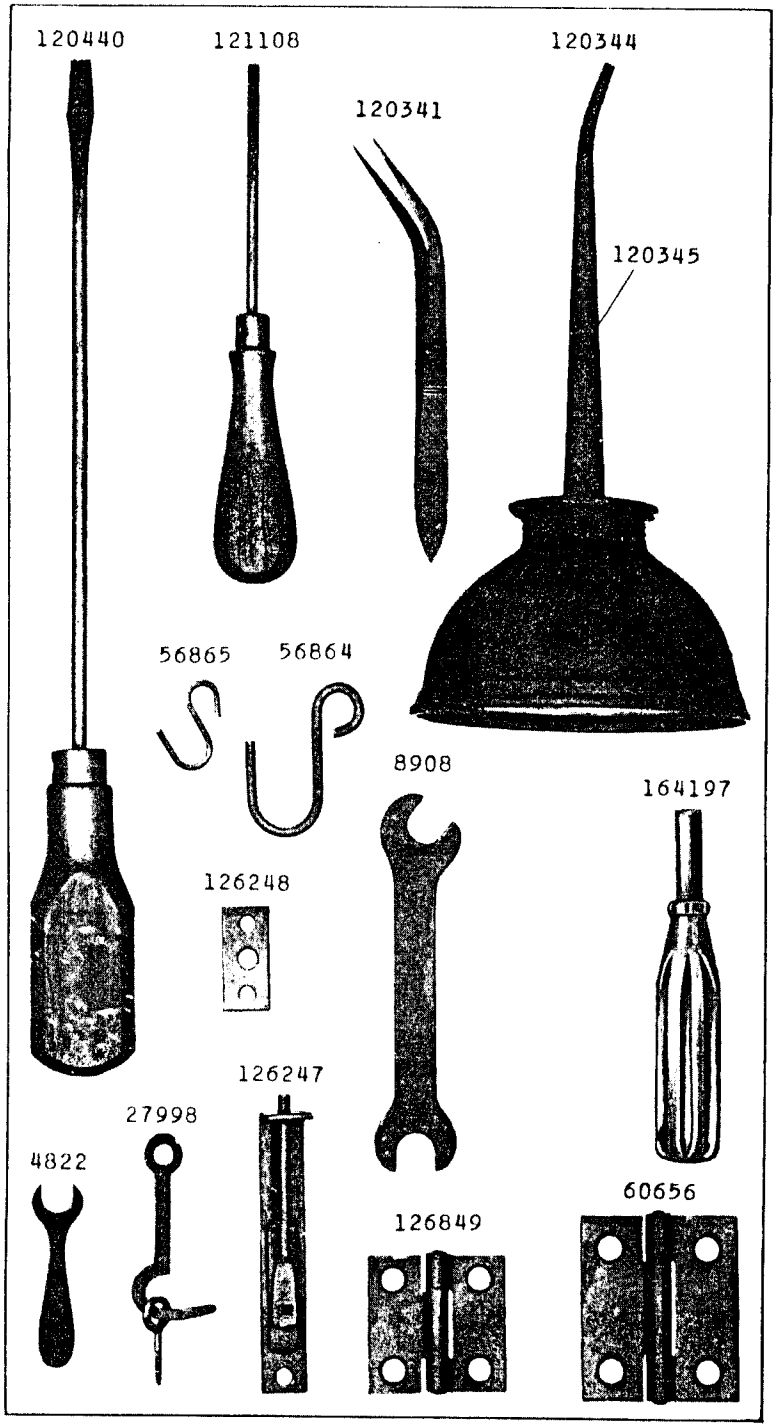

24512-¼

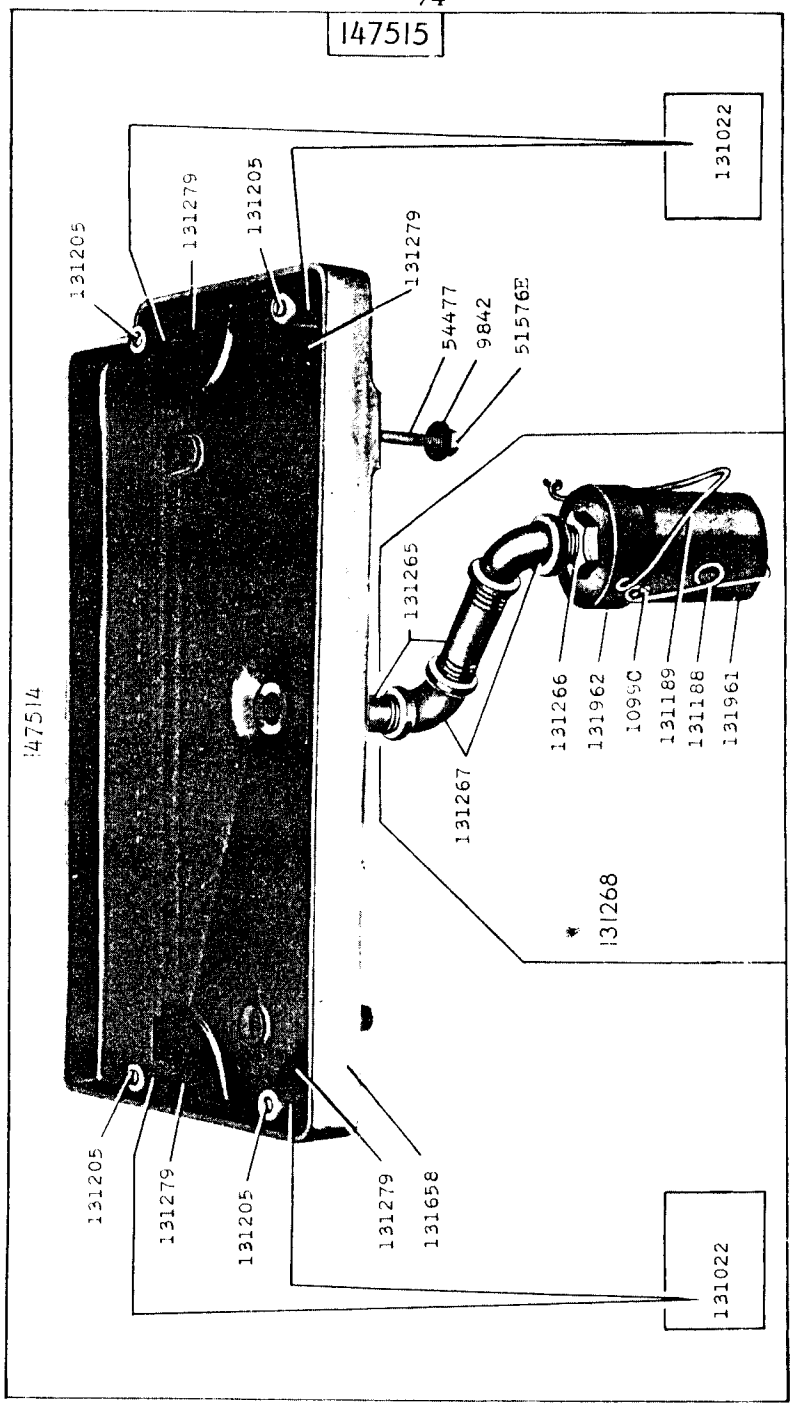

From the library of: Superior Sewing Machine & Supply LLC

24513-1/6

150062

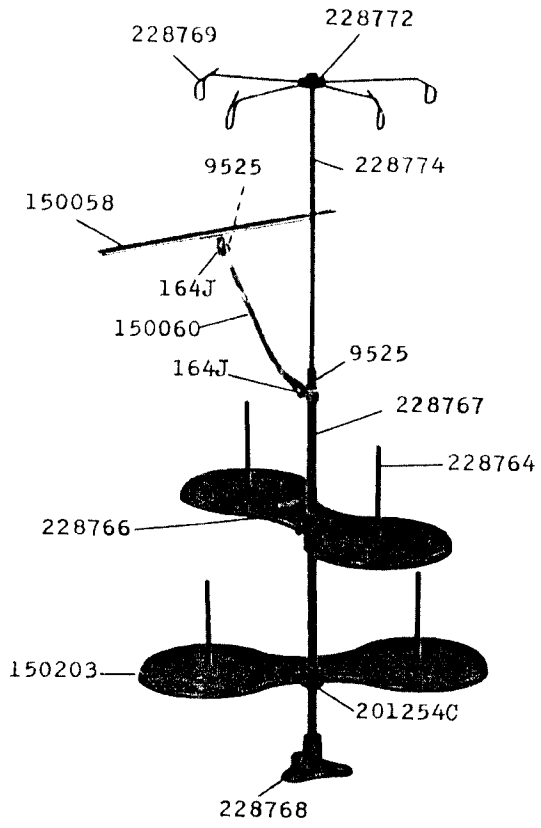

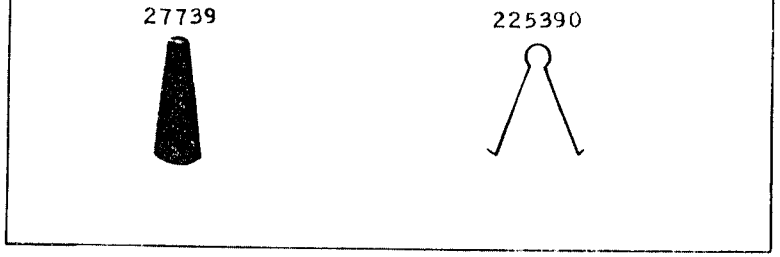

24514-1/2

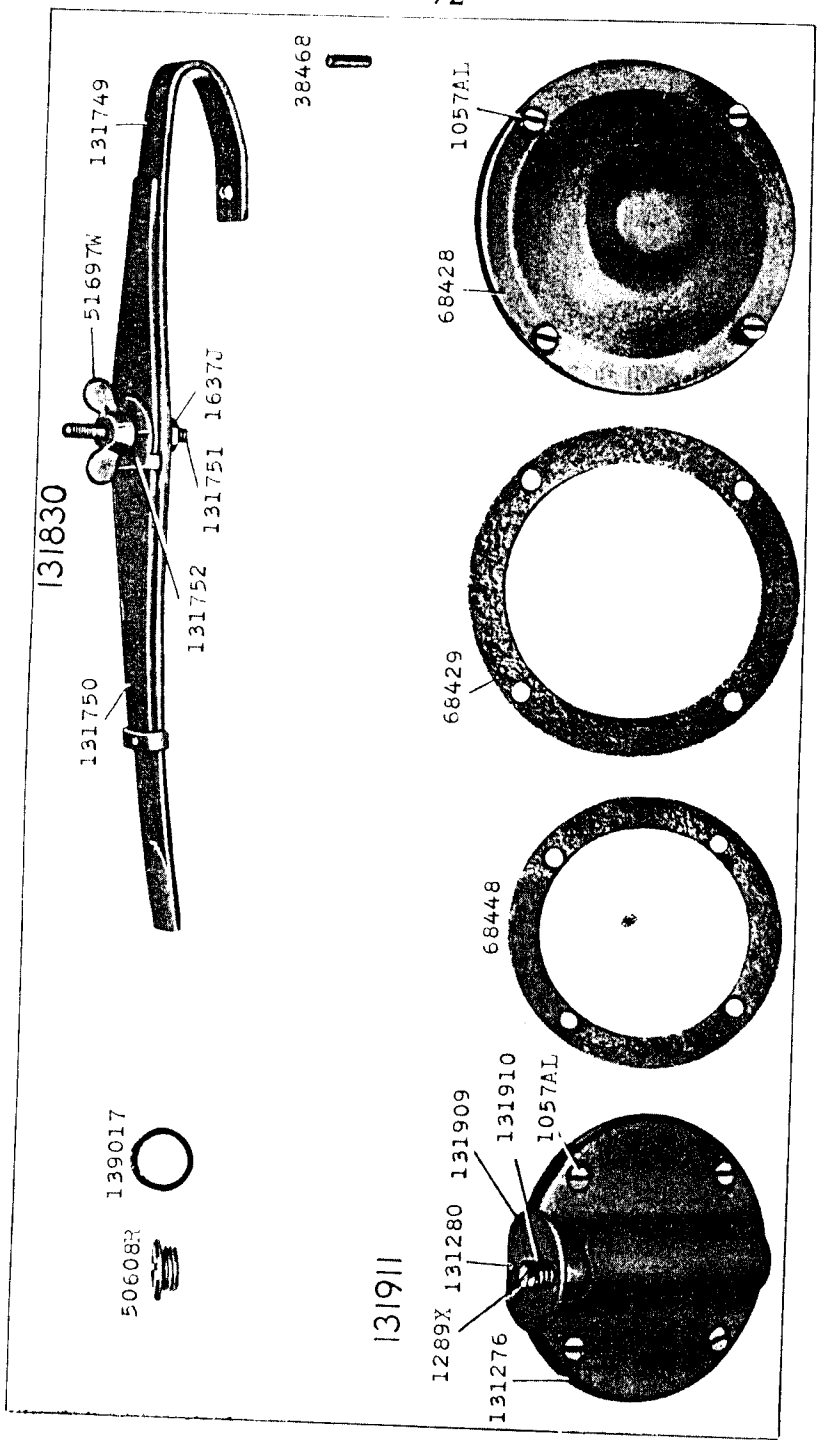

From the library of: Superior Sewing Machine & Supply LLC