ILLUSTRATED PARTS LIST

FOR

SINGER®

MACHINES

412U 141A
141B
141G
541A
541B
541G

Superior

®A registered trademark of The Singer Company Limited
Copyright©1997 The Singer Company Limited
All Rights Reserved Throughout The World

CONTENTS

FACE PLATE, ARM SIDE COVER 1

TAKE-UP LEVER, ARM SHAFT, MACHINE PULLEY 2

NEEDLE BAR, NEEDLE BAR ROCK FRAME 3

PRESSER FOOT, PRESSER BAR, PRESSER BAR LIFTER 4

FEED MECHANISM (FEED ROCK SHAFT DRIVING FRAME) 5

FEED REGULATING DIAL, FEED REVERSE LEVER 6

FEED BAR, FEED DRIVING ROCK SHAFT 7

HOOK DRIVING SHAFT,HOOK DRIVING SHAFT CONNECTION BELT PULLEY 8

HOOK SADDLE (RIGHT), HOOK 9

HOOK SADDLE (LEFT), HOOK 11

LUBRICATION (PLUNGER PUMP) 13

LUBRICATION (OIL RESERVOIR) 14

LUBRICATION (BED AREA) 15

TENSION 16

BOBBIN WINDER 17

THREAD TRIMMER 1 18

THREAD TRIMMER 2 19

TENSION RELEASING 20

BACK TACK MECHANISM 21

BACK TACK SWITCH 22

WIPER 23

GAUGE PARTS 24

ACCESSORIES AND ATTACHMENTS 1 25

ACCESSORIES AND ATTACHMENTS 2 26

ACCESSORIES AND ATTACHMENTS 3 27

PARTS AVAILABLE AT EXTRA CHARGE 28

FACE PLATE, ARM SIDE COVER

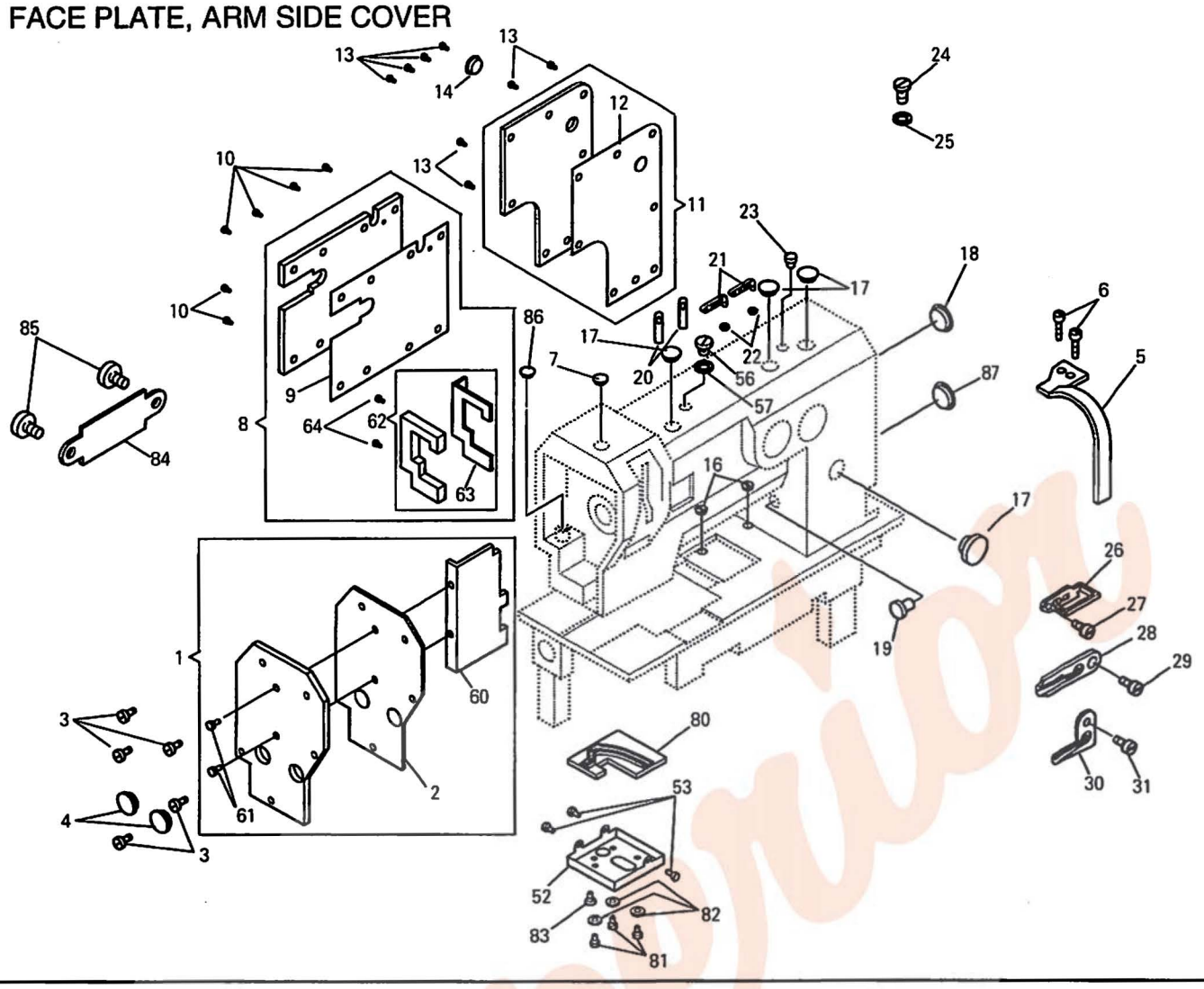

NO.	PART NO.	141A	141B	141G	541A	541B	541G	QTY	DESCRIPTION
1	552866-467	*	—	—	*	—	—	1	FACE PLATE AND FACE PLATE PACKING COMP.
1	554490-467	—	*	*	—	*	*	1	FACE PLATE AND FACE PLATE PACKING COMP.
2	554309	*	*	*	*	*	*	1	FACE PLATE PACKING
3	544217-052	*	*	*	*	*	*	5	FACE PLATE SCREW
4	368063	*	*	*	*	*	*	2	FACE PLATE PLUG
5	552410-467	*	*	*	—	—	—	1	TAKE-UP LEVER GUARD
5	552823-467	—	—	—	*	*	*	1	TAKE-UP LEVER GUARD
6	544217-052	*	*	*	*	*	*	2	TAKE-UP LEVER GUARD SCREW
7	418384-452	*	*	*	*	*	*	1	ARM HOLE PLUG (NEEDLE BAR HOLE)
8	554450	*	*	*	*	*	*	1	ARM SIDE COVER (SMALL) AND ARM SIDE COVER (SMALL) GASKET COMP.
9	554308	*	*	*	*	*	*	1	ARM SIDE COVER (SMALL) GASKET
10	544217-052	*	*	*	*	*	*	6	ARM SIDE COVER (SMALL) SCREW
11	552867	*	*	*	*	*	*	1	ARM SIDE COVER (LARGE) AND ARM SIDE COVER (LARGE) GASKET COMP.
12	554310	*	*	*	*	*	*	1	ARM SIDE COVER (LARGE) PACKING
13	544217-052	*	*	*	*	*	*	8	ARM SIDE COVER (LARGE) SCREW
14	368063-392	*	*	*	*	*	*	1	ARM SIDE COVER (LARGE) HOLE PLUG
16	549230	*	*	*	*	*	*	2	BED OIL HOLE PLUG
17	544875-392	*	*	*	*	*	*	4	ARM HOLE PLUG
18	552835	*	*	*	*	*	*	1	ARM HOLE PLUG (BACK)
19	508283	*	*	*	*	*	*	1	ARM HOLE PLUG (FEED REVERSE LEVER HINGE STUD HOLE)
20	508562	*	*	*	*	*	*	2	THREAD GUIDE STUD
21	411092	*	*	*	*	*	*	2	THREAD RETAINER (4-HOLES)
22	541180	*	*	*	*	*	*	2	THREAD RETAINER (4-HOLES) NUT
23	375014-452	*	*	*	*	*	*	1	ARM HOLE PLUG (SMALL)
24	544212-003	*	*	*	*	*	*	1	EARTH WIRE SCREW
25	543803-003	*	*	*	*	*	*	1	EARTH WIRE SCREW WASHER
26	552415	*	*	*	*	*	*	1	THREAD GUIDE (UPPER)
27	544347	*	*	*	*	*	*	1	THREAD GUIDE (UPPER) SCREW
28	267316	*	*	*	*	*	*	1	THREAD GUIDE (MIDDLE)
29	544347	*	*	*	*	*	*	1	THREAD GUIDE (MIDDLE) SCREW
30	224040	*	*	*	*	*	*	1	THREAD GUIDE (LOWER)
31	544347	*	*	*	*	*	*	1	THREAD GUIDE (LOWER) SCREW

NO.	PART NO.	141A	141B	141G	541A	541B	541G	QTY	DESCRIPTION
52	552420	*	*	*	*	*	*	1	NEEDLE BAR ROCK FRAME COVER
53	544217-051	*	*	*	*	*	*	3	NEEDLE BAR ROCK FRAME COVER SCREW
56	545036	*	*	*	*	*	*	1	TAKE-UP LEVER OIL HOLE CAP SCREW
57	545754	*	*	*	*	*	*	1	TAKE-UP LEVER OIL HOLE CAP SCREW PACKING
60	554492	—	*	*	—	*	*	1	FACE PLATE OIL GUARD
61	544211-002	—	*	*	—	*	*	2	FACE PLATE OIL GUARD SCREW
62	554451	*	*	*	*	*	*	1	ARM SIDE COVER (SMALL) OIL GUARD COMP
63	554686	*	*	*	*	*	*	1	ARM SIDE COVER (SMALL) OIL GUARD OIL SEAL
64	544211-002	*	*	*	*	*	*	2	ARM SIDE COVER (SMALL) OIL GUARD SCREW
80	554855	*	*	*	*	*	*	1	NEEDLE BAR ROCK FRAME COVER PACKING
81	374497-001	*	*	*	*	*	*	3	NEEDLE BAR ROCK FRAME COVER SCREW
82	548054	*	*	*	*	*	*	3	NEEDLE BAR ROCK FRAME COVER SCREW WASHER
83	374583-002	*	*	*	*	*	*	1	NEEDLE BAR ROCK FRAME COVER SCREW
84	554640	*	—	—	*	—	—	1	ARM SIDE COVER
85	544217-052	*	—	—	*	—	—	2	ARM SIDE COVER SCREW
86	418384-452	*	—	—	*	—	—	1	ARM HOLE PLUG
87	502760	*	*	*	*	*	*	1	ARM HOLE PLUG (FEED REGULATOR SHAFT HOLE)

TAKE-UP LEVER, ARM SHAFT, MACHINE PULLEY

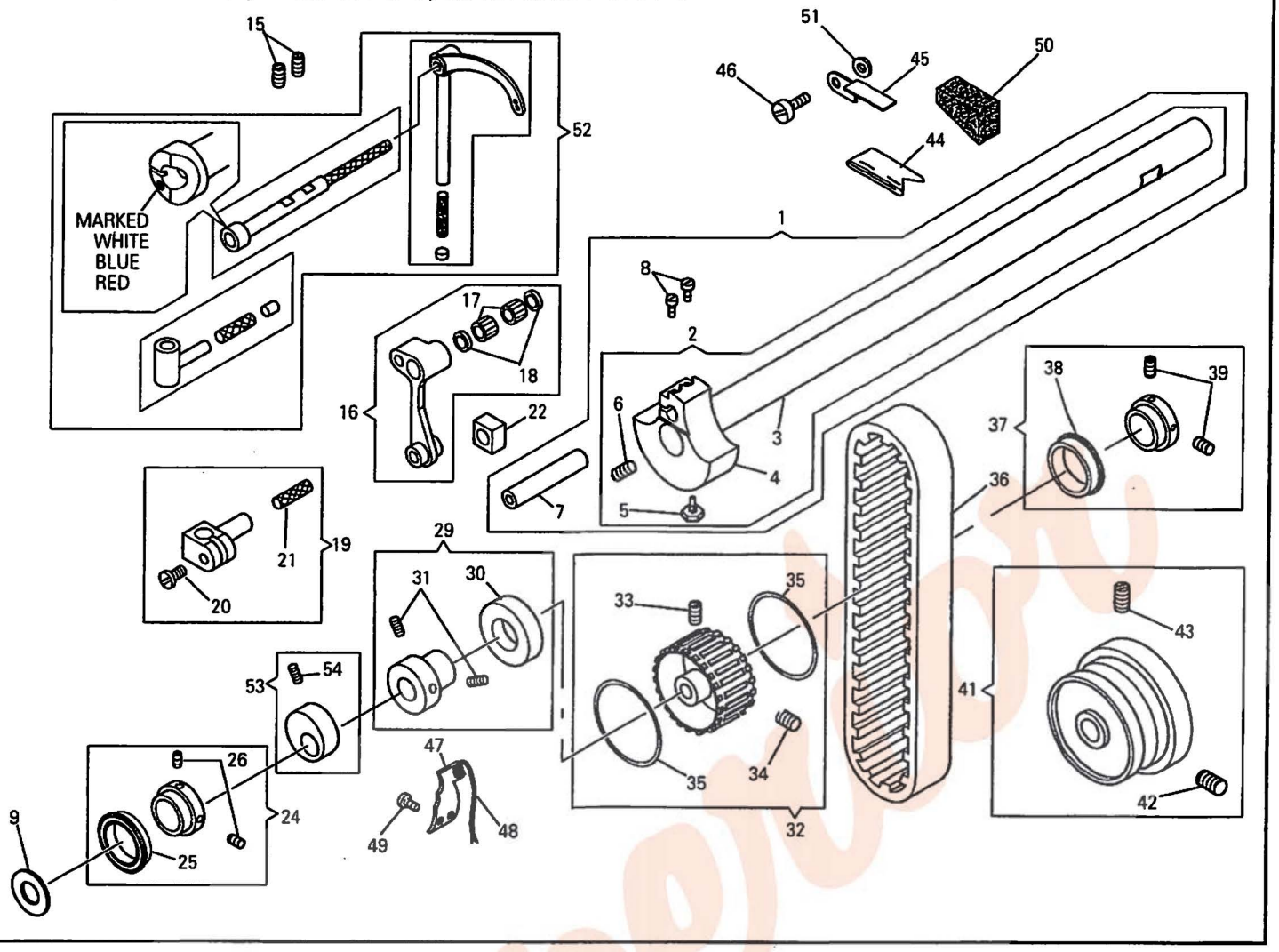

NO.	PART NO.	141A	141B	141G	541A	541B	541G	QTY	DESCRIPTION
1	554811	*	*	*	—	—	—	1	ARM SHAFT, NEEDLE BAR CONNECTING LINK STUD COMP.
1	554814	—	—	—	*	*	*	1	ARM SHAFT, NEEDLE BAR CONNECTING LINK STUD COMP.
2	554812	*	*	*	—	—	—	1	ARM SHAFT NEEDLE BAR CRANK COMP.
2	554815	—	—	—	*	*	*	1	ARM SHAFT NEEDLE BAR CRANK COMP.
3	554323	*	*	*	*	*	*	1	ARM SHAFT
4	554813	*	*	*	—	—	—	1	NEEDLE BAR CRANK
4	554816	—	—	—	*	*	*	1	NEEDLE BAR CRANK
5	374100	*	*	*	*	*	*	1	NEEDLE BAR CRANK POSITION SCREW
6	504095	*	*	*	*	*	*	1	NEEDLE BAR CRANK SET SCREW
7	554693	*	*	*	*	*	*	1	NEEDLE BAR CONNECTING LINK STUD
8	544448	*	*	*	*	*	*	2	NEEDLE BAR CONNECTING LINK STUD SET SCREW
9	554325	*	*	*	*	*	*	1	NEEDLE BAR CRANK FRICTION WASHER
15	544209-006	*	*	*	*	*	*	2	TAKE-UP LEVER HINGE STUD SET SCREW
16	554327	*	*	*	*	*	*	1	NEEDLE BAR CONNECTING LINK COMP.
17	502964	*	*	*	*	*	*	2	NEEDLE BAR CONNECTING LINK BEARING
18	554329	*	*	*	*	*	*	2	NEEDLE BAR CONNECTING LINK BEARING RETAINING RING
19	552428	*	*	*	*	*	*	1	NEEDLE BAR CONNECTING STUD COMP.
20	545071	*	*	*	*	*	*	1	NEEDLE BAR CONNECTING STUD PINCH SCREW
21	202330	*	*	*	*	*	*	1	NEEDLE BAR CONNECTING STUD OIL WICK
22	552429	*	*	*	*	*	*	1	NEEDLE BAR CONNECTING STUD SLIDE BLOCK
24	554334	*	*	*	*	*	*	1	ARM SHAFT BALL BEARING (FRONT) COMP.
25	554335	*	*	*	*	*	*	1	ARM SHAFT BALL BEARING (FRONT)
26	544209-005	*	*	*	*	*	*	2	ARM SHAFT BALL BEARING INSIDE COLLAR SET SCREW
29	554851	*	*	*	*	*	*	1	ARM SHAFT BALL BEARING (MIDDLE) COMP.
30	554835	*	*	*	*	*	*	1	ARM SHAFT BALL BEARING (MIDDLE)
31	544207-012	*	*	*	*	*	*	2	ARM SHAFT BALL BEARING INSIDE COLLAR SET SCREW
32	554336	*	*	*	*	*	*	1	ARM SHAFT CONNECTION BELT PULLEY COMP.

NO.	PART NO.	141A	141B	141G	541A	541B	541G	QTY	DESCRIPTION
33	544322	*	*	*	*	*	*	1	ARM SHAFT CONNECTION BELT PULLEY SET SCREW
34	544330	*	*	*	*	*	*	1	ARM SHAFT CONNECTION BELT PULLEY POSITION SCREW
35	202253	*	*	*	*	*	*	2	ARM SHAFT CONNECTION BELT PULLEY SPRING FLANGE
36	267161	*	*	*	*	*	*	1	ARM SHAFT CONNECTION BELT
37	554783	*	*	*	*	*	*	1	ARM SHAFT BALL BEARING (BACK) COMP.
38	554784	*	*	*	*	*	*	1	ARM SHAFT BALL BEARING (BACK)
39	544209-005	*	*	*	*	*	*	2	ARM SHAFT BALL BEARING INSIDE COLLAR SET SCREW
41	554656-383	*	*	*	*	*	*	1	MACHINE PULLEY COMP.
42	141566	*	*	*	*	*	*	1	MACHINE PULLEY POSITION SCREW
43	141567-833	*	*	*	*	*	*	1	MACHINE PULLEY SET SCREW
44	552899	*	*	*	*	*	*	1	TAKE-UP LEVER OIL FELT
45	552898	*	*	*	*	*	*	1	TAKE-UP LEVER OIL FELT RETAINER
46	414508	*	—	—	*	—	—	1	TAKE-UP LEVER OIL FELT RETAINER SCREW
47	554341	*	*	*	*	*	*	1	TAKE-UP LEVER OIL GUARD
48	554342	*	*	*	*	*	*	1	TAKE-UP LEVER OIL GUARD OIL WICK
49	545114	*	*	*	*	*	*	1	TAKE-UP LEVER OIL GUARD SCREW
50	554720	*	*	*	*	*	*	1	TAKE-UP LEVER OIL FELT PAD
51	548480	*	—	—	*	—	—	1	TAKE-UP LEVER OIL FELT RETAINER SPACER
52	554878-000	*	*	*	—	—	—	1	TAKE-UP LEVER, TAKE-UP LEVER DRIVING STUD, TAKE-UP LEVER HINGE STUD COMP. -001 (MARKED WHITE) -002 (MARKED BLUE) -003 (MARKED RED)
52	554879-000	—	—	—	*	*	*	1	TAKE-UP LEVER, TAKE-UP LEVER DRIVING STUD, TAKE-UP LEVER HINGE STUD COMP. -001 (MARKED WHITE) -002 (MARKED BLUE) -003 (MARKED RED)
53	554597	—	—	—	*	*	*	1	ARM SHAFT BALANCER COMP.
54	544209-006	—	—	—	*	*	*	1	ARM SHAFT BALANCER SET SCREW

NEEDLE BAR, NEEDLE BAR ROCK FRAME

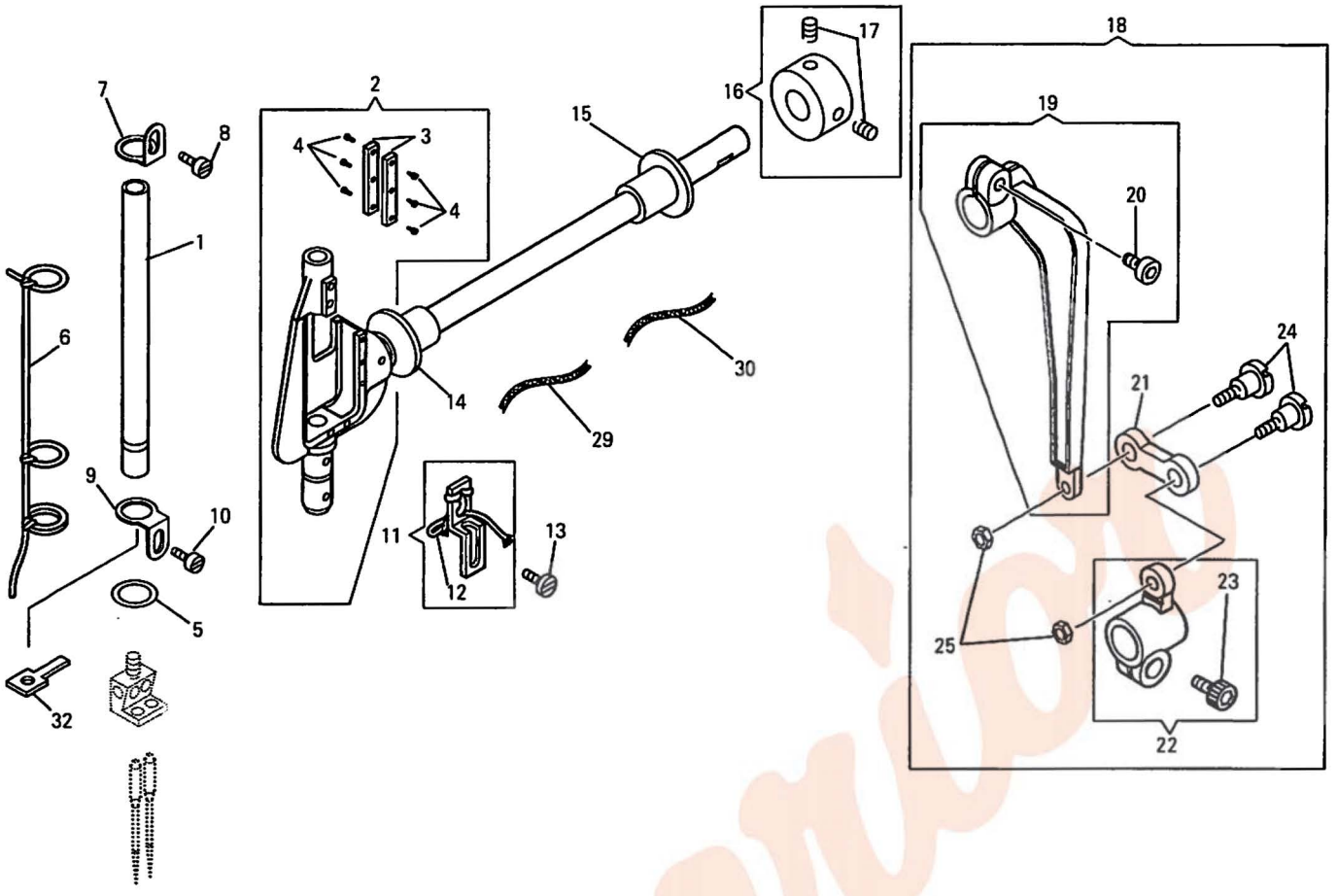

NO.	PART NO.	141A	141B	141G	541A	541B	541G	QTY	DESCRIPTION
1	412175	*	*	*	*	*	*	1	NEEDLE BAR
2	552435	*	*	*	*	*	*	1	NEEDLE BAR ROCK FRAME COMP.
3	554358	*	*	*	*	*	*	2	NEEDLE BAR ROCK FRAME WEAR PLATE
4	544377	*	*	*	*	*	*	6	NEEDLE BAR ROCK FRAME WEAR PLATE SCREW
5	543871-012	*	*	*	*	*	*	1	NEEDLE BAR OIL GUARD
6	554862	*	*	*	*	*	*	1	NEEDLE BAR OIL WICK
7	552440	*	*	*	*	*	*	1	NEEDLE BAR OIL WICK RETAINER (UPPER)
8	544376	*	*	*	*	*	*	1	NEEDLE BAR OIL WICK RETAINER (UPPER) SCREW
9	554531	*	*	*	*	*	*	1	NEEDLE BAR OIL WICK RETAINER (LOWER)
10	544376	*	*	*	*	*	*	1	NEEDLE BAR OIL WICK RETAINER (LOWER) SCREW
11	554343	*	*	*	*	*	*	1	NEEDLE BAR CONNECTING LINK OIL WICK RETAINER COMP.
12	554344	*	*	*	*	*	*	1	NEEDLE BAR CONNECTING LINK OIL WICK
13	544376	*	*	*	*	*	*	1	NEEDLE BAR CONNECTING LINK OIL WICK RETAINER SCREW
14	554635	*	*	*	*	*	*	1	NEEDLE BAR ROCK FRAME ROCK SHAFT BUSHING (FRONT)
15	554636	*	*	*	*	*	*	1	NEEDLE BAR ROCK FRAME ROCK SHAFT BUSHING (BACK)
16	552443	*	*	*	*	*	*	1	NEEDLE BAR ROCK FRAME ROCK SHAFT COLLAR COMP.
17	544204-001	*	*	*	*	*	*	2	NEEDLE BAR ROCK FRAME ROCK SHAFT COLLAR SCREW
18	554637	*	*	*	*	*	*	1	NEEDLE BAR ROCK FRAME ROCK SHAFT CONNECTION, CRANK AND LINK COMP.
19	554638	*	*	*	*	*	*	1	NEEDLE BAR ROCK FRAME ROCK SHAFT CONNECTION COMP.
20	374108-009	*	*	*	*	*	*	1	NEEDLE BAR ROCK FRAME ROCK SHAFT CONNECTION PINCH SCREW
21	552448	*	*	*	*	*	*	1	NEEDLE BAR ROCK FRAME ROCK SHAFT CRANK LINK
22	552449	*	*	*	*	*	*	1	NEEDLE BAR ROCK FRAME ROCK SHAFT CRANK COMP.
23	374108-009	*	*	*	*	*	*	1	NEEDLE BAR ROCK FRAME ROCK SHAFT CRANK PINCH SCREW
24	374547	*	*	*	*	*	*	2	NEEDLE BAR ROCK FRAME ROCK SHAFT CRANK LINK HINGE SCREW
25	541168-003	*	*	*	*	*	*	2	NEEDLE BAR ROCK FRAME ROCK SHAFT CRANK LINK HINGE SCREW NUT
29	554465-002	*	*	*	*	*	*	1	NEEDLE BAR ROCK FRAME ROCK SHAFT BUSHING (FRONT) OIL WICK
30	554466-003	*	*	*	*	*	*	1	NEEDLE BAR ROCK FRAME ROCK SHAFT BUSHING (BACK) OIL WICK
32	554858	*	*	*	*	*	*	1	NEEDLE BAR ROCK FRAME FELT

PRESSER FOOT, PRESSER BAR, PRESSER BAR LIFTER

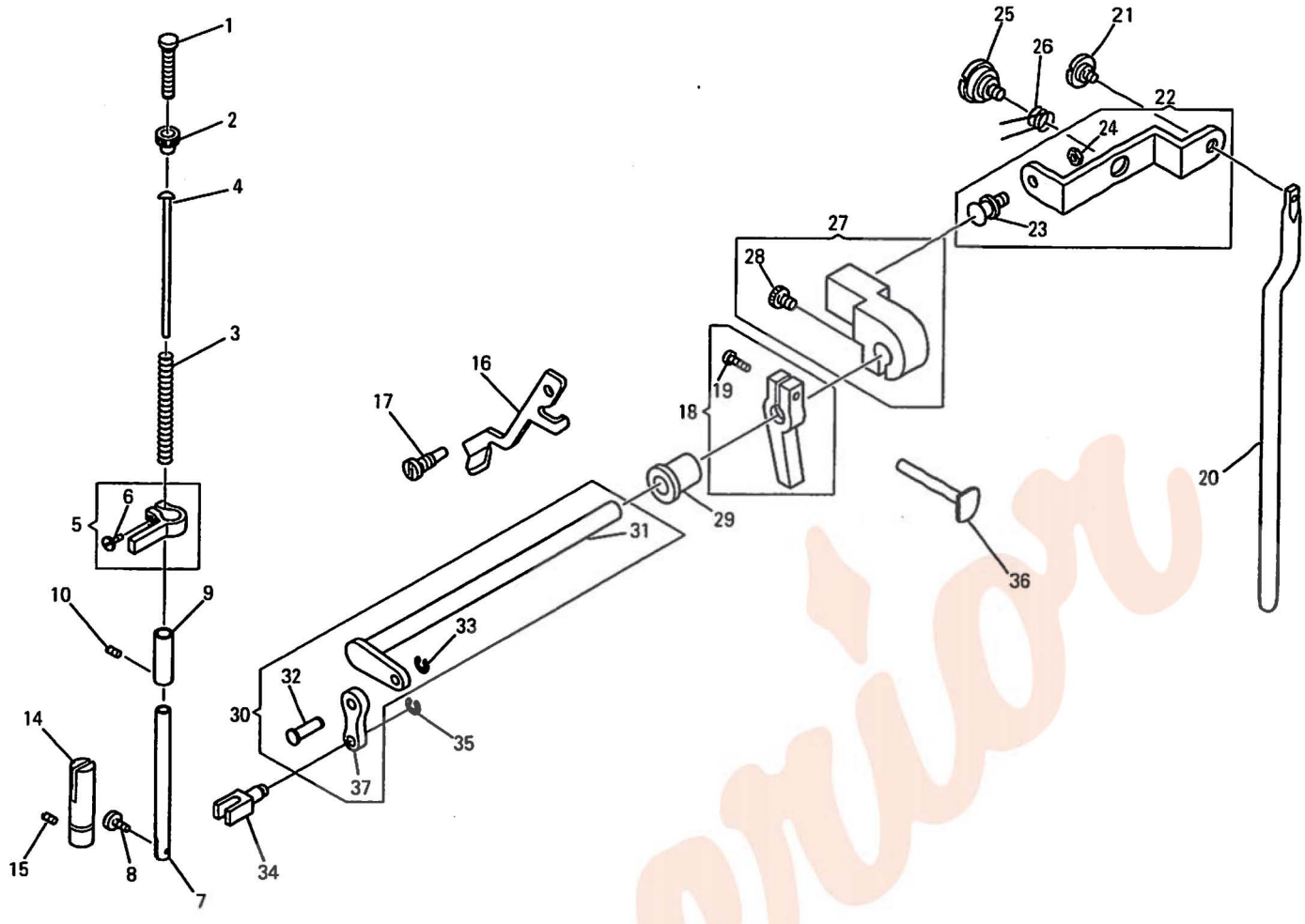

NO.	PART NO.	141A	141B	141G	541A	541B	541G	QTY	DESCRIPTION
1	552859	*	*	*	*	*	*	1	PRESSURE REGULATING SCREW
2	376424-383	*	*	*	*	*	*	1	PRESSURE REGULATING SCREW LOCK NUT
3	552454	*	*	*	*	*	*	1	PRESSER BAR SPRING
4	552455	*	*	*	*	*	*	1	PRESSURE REGULATING SCREW GUIDE ROD
5	552452	*	*	*	*	*	*	1	PRESSER BAR POSITION GUIDE LEVER COMP.
6	545295	*	*	*	*	*	*	1	PRESSER BAR POSITION GUIDE LEVER PINCH SCREW
7	552451	*	*	*	*	*	*	1	PRESSER BAR
8	500256	*	*	*	*	*	*	1	PRESSER FOOT SCREW
9	554407	*	*	*	*	*	*	1	PRESSER BAR BUSHING
10	544205-002	*	*	*	*	*	*	1	PRESSER BAR BUSHING SET SCREW
14	202337	*	*	*	*	*	*	1	PRESSER BAR POSITION GUIDE
15	544205-002	*	*	*	*	*	*	1	PRESSER BAR POSITION GUIDE SET SCREW
16	552456	*	*	*	*	*	*	1	PRESSER BAR LIFTER
17	374541	*	*	*	*	*	*	1	PRESSER BAR LIFTER HINGE SCREW
18	552457	*	*	*	*	*	*	1	PRESSER BAR LIFTER ARM COMP.
19	374108-001	*	*	*	*	*	*	1	PRESSER BAR LIFTER ARM PINCH SCREW
20	552459	*	*	*	*	*	*	1	KNEE LIFTER ROCK LEVER LIFTING ROD
21	545356	*	*	*	*	*	*	1	KNEE LIFTER ROCK LEVER LIFTING ROD SCREW
22	552460	*	*	*	*	*	*	1	KNEE LIFTER ROCK LEVER COMP.
23	552462	*	*	*	*	*	*	1	KNEE LIFTER ROCK LEVER BALL STUD
24	541166-001	*	*	*	*	*	*	1	KNEE LIFTER ROCK LEVER BALL STUD LOCK NUT
25	374559	*	*	*	*	*	*	1	KNEE LIFTER ROCK LEVER SCREW
26	417113	*	*	*	*	*	*	1	KNEE LIFTER ROCK LEVER SPRING
27	552464	*	*	*	*	*	*	1	KNEE LIFTER SHAFT DRIVING ARM COMP.
28	374108-009	*	*	*	*	*	*	1	KNEE LIFTER SHAFT DRIVING ARM PINCH SCREW
29	552466	*	*	*	*	*	*	1	KNEE LIFTER SHAFT BUSHING

NO.	PART NO.	141A	141B	141G	541A	541B	541G	QTY	DESCRIPTION
30	552467	*	*	*	*	*	*	1	KNEE LIFTER SHAFT, LINK COMP.
31	552468	*	*	*	*	*	*	1	KNEE LIFTER SHAFT
32	552472	*	*	*	*	*	*	1	KNEE LIFTER SHAFT LINK PIN
33	543860-005	*	*	*	*	*	*	1	KNEE LIFTER SHAFT LINK PIN SNAP RING
34	552473	*	*	*	*	*	*	1	KNEE LIFTER SHAFT LINK BLOCK
35	543860-005	*	*	*	*	*	*	1	KNEE LIFTER SHAFT LINK BLOCK SNAP RING
36	552474	*	*	*	*	*	*	1	TENSION RELEASE LEVER ROD COMP.
37	552471	*	*	*	*	*	*	1	KNEE LIFTER SHAFT LINK

Superior

FEED MECHANISM (FEED ROCK SHAFT DRIVING FRAME)

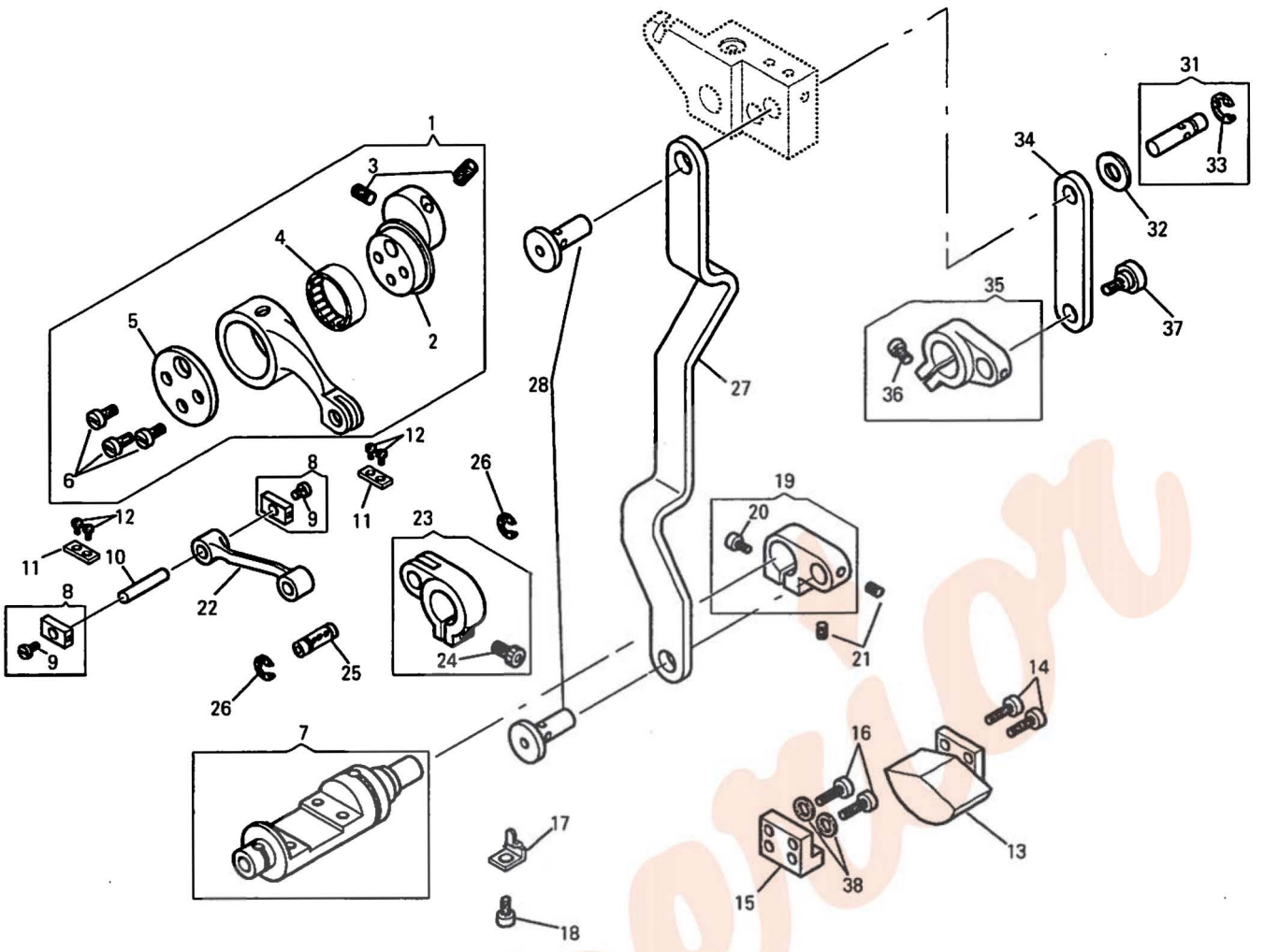

NO.	PART NO.	141A	141B	141G	541A	541B	541G	QTY	DESCRIPTION
1	552477	*	*	*	*	*	*	1	FEED DRIVING ECCENTRIC AND FEED DRIVING ECCENTRIC CONNECTION COMP.
2	552478	*	*	*	*	*	*	1	FEED DRIVING ECCENTRIC
3	544209-005	*	*	*	*	*	*	2	FEED DRIVING ECCENTRIC SET SCREW
4	552479	*	*	*	*	*	*	1	FEED DRIVING ECCENTRIC CONNECTION BEARING
5	552481	*	*	*	*	*	*	1	FEED DRIVING ECCENTRIC CONNECTION BEARING RETAINING PLATE
6	544212-051	*	*	*	*	*	*	3	FEED DRIVING ECCENTRIC CONNECTION BEARING RETAINING PLATE SCREW
7	552482	*	*	*	*	*	*	1	FEED ROCK SHAFT DRIVING FRAME COMP.
8	552484	*	*	*	*	*	*	2	FEED ROCK SHAFT DRIVING SLIDE BLOCK COMP.
9	549166	*	*	*	*	*	*	2	FEED ROCK SHAFT DRIVING SLIDE BLOCK SCREW
10	552485	*	*	*	*	*	*	1	FEED ROCK SHAFT DRIVING SLIDE BLOCK STUD
11	552486	*	*	*	*	*	*	2	FEED ROCK SHAFT DRIVING SLIDE BLOCK GUIDE PLATE
12	544212-053	*	*	*	*	*	*	4	FEED ROCK SHAFT DRIVING SLIDE BLOCK GUIDE PLATE SCREW
13	554493	*	*	*	*	*	*	1	FEED ROCK SHAFT DRIVING FRAME BALANCE WEIGHT
14	374106-006	*	*	*	*	*	*	2	FEED ROCK SHAFT DRIVING FRAME BALANCE WEIGHT SCREW
15	554494	*	*	*	*	*	*	1	FEED ROCK SHAFT DRIVING FRAME BALANCE WEIGHT BRACKET
16	374107-003	*	*	*	*	*	*	2	FEED ROCK SHAFT DRIVING FRAME BALANCE WEIGHT BRACKET SCREW
17	552487	*	*	*	*	*	*	1	FEED ROCK SHAFT DRIVING FRAME SUPPORT PLATE
18	544213-051	*	*	*	*	*	*	1	FEED ROCK SHAFT DRIVING FRAME SUPPORT PLATE SCREW

NO.	PART NO.	141A	141B	141G	541A	541B	541G	QTY	DESCRIPTION
19	554798	*	*	*	*	*	*	1	FEED ROCK SHAFT DRIVING FRAME LEVER COMP.
20	374107-004	*	*	*	*	*	*	1	FEED ROCK SHAFT DRIVING FRAME LEVER PINCH SCREW
21	544208-005	*	*	*	*	*	*	2	FEED ROCK SHAFT DRIVING FRAME LEVER STUD SET SCREW
22	552490	*	*	*	*	*	*	1	FEED ROCK SHAFT DRIVING LINK
23	554680	*	*	*	*	*	*	1	FEED ROCK SHAFT CRANK COMP.
24	374107-004	*	*	*	*	*	*	1	FEED ROCK SHAFT CRANK PINCH SCREW
25	552493	*	*	*	*	*	*	1	FEED ROCK SHAFT CRANK PIN
26	543801-006	*	*	*	*	*	*	2	FEED ROCK SHAFT CRANK PIN SNAP RING
27	554756	*	*	*	*	*	*	1	FEED REGULATING LINK
28	554797	*	*	*	*	*	*	2	FEED REGULATING LINK STUD
31	554785	*	*	*	*	*	*	1	FEED REVERSE LINK STUD COMP.
32	412226	*	*	*	*	*	*	1	FEED REVERSE LINK STUD THRUST WASHER
33	543571	*	*	*	*	*	*	1	FEED REVERSE LINK STUD SNAP RING
34	554757	*	*	*	*	*	*	1	FEED REVERSE LINK
35	554754	*	*	*	*	*	*	1	FEED REVERSE LEVER SHAFT CRANK COMP.
36	374107-004	*	*	*	*	*	*	1	FEED REVERSE LEVER SHAFT CRANK PINCH SCREW
37	549288	*	*	*	*	*	*	1	FEED REVERSE LEVER SHAFT CRANK HINGE SCREW
38	544840	*	*	*	*	*	*	2	FEED ROCK SHAFT DRIVING FRAME BALANCE WEIGHT BRACKET SPRING WASHER

FEED REGULATING DIAL, FEED REVERSE LEVER

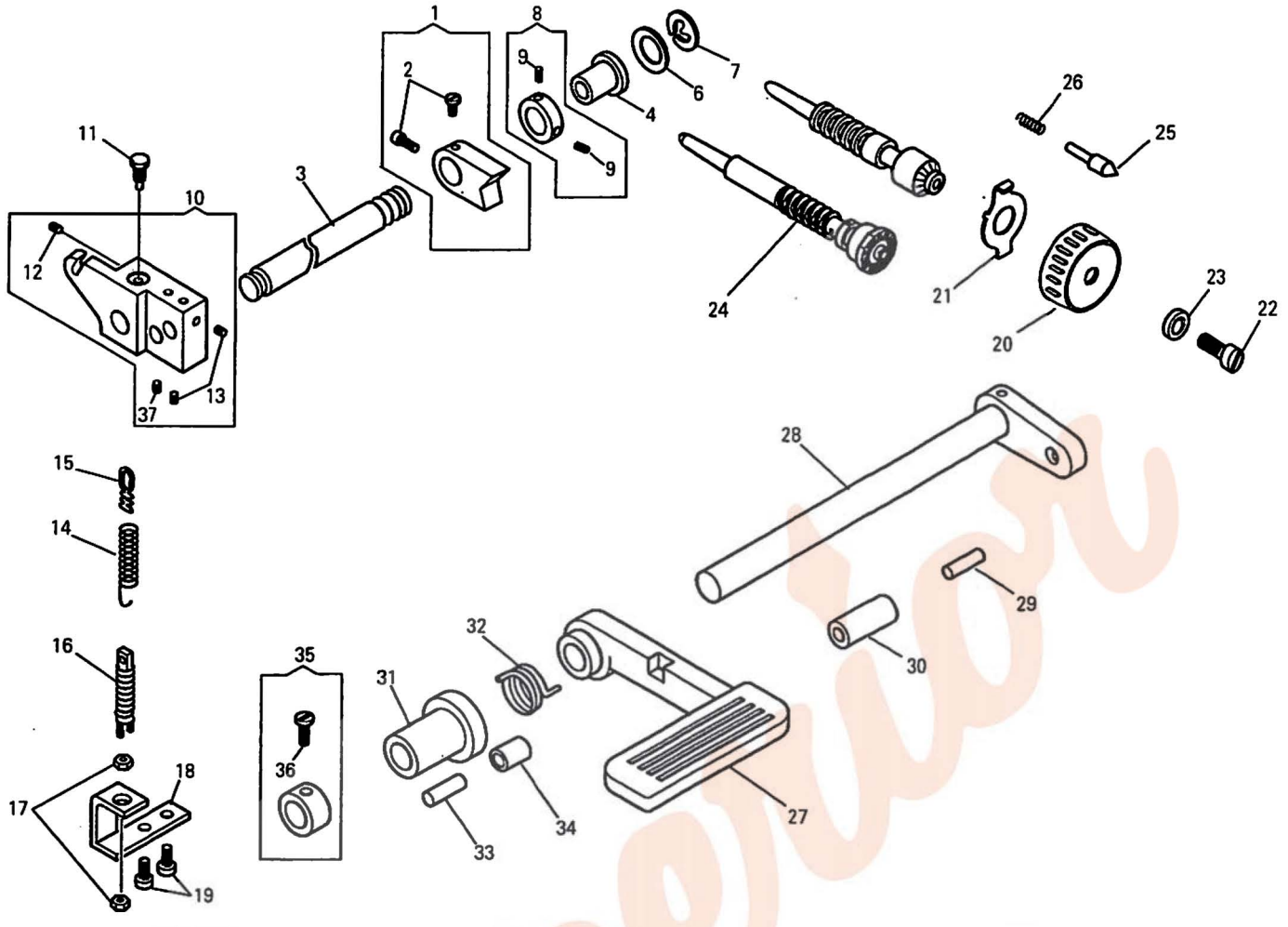

NO.	PART NO.	141A	141B	141G	541A	541B	541G	QTY	DESCRIPTION
1	552494	*	*	*	*	*	*	1	FEED REGULATOR COMP.
2	374300	*	*	*	*	*	*	2	FEED REGULATOR SCREW
3	552496	*	*	*	*	*	*	1	FEED REGULATOR SHAFT
4	552497	*	*	*	*	*	*	1	FEED REGULATOR SHAFT BUSHING
6	418340	*	*	*	*	*	*	1	FEED REGULATOR SHAFT THRUST WASHER
7	543801-010	*	*	*	*	*	*	1	FEED REGULATOR SHAFT SNAP RING
8	552719	*	*	*	*	*	*	1	FEED REGULATOR SHAFT COLLAR COMP.
9	544207-011	*	*	*	*	*	*	2	FEED REGULATOR SHAFT COLLAR SET SCREW
10	554752	*	*	*	*	*	*	1	FEED REGULATOR SHAFT ARM COMP.
11	368108	*	*	*	*	*	*	1	FEED REGULATOR SHAFT ARM POSITION SCREW
12	544205-001	*	*	*	*	*	*	1	FEED REGULATOR SHAFT ARM SET SCREW
13	544208-005	*	*	*	*	*	*	2	FEED REGULATING STUD SET SCREW
14	554499	*	*	*	*	*	*	1	FEED REGULATOR SHAFT ARM SPRING
15	554500	*	*	*	*	*	*	1	FEED REGULATOR SHAFT ARM SPRING HOOK (UPPER)
16	554498	*	*	*	*	*	*	1	FEED REGULATOR SHAFT ARM SPRING HOOK (LOWER)
17	541166-001	*	*	*	*	*	*	2	FEED REGULATOR SHAFT ARM SPRING HOOK (LOWER) LOCK NUT
18	554501	*	*	*	*	*	*	1	FEED REGULATOR SHAFT ARM SPRING HOOK RETAINER
19	544213-053	*	*	*	*	*	*	2	FEED REGULATOR SHAFT ARM SPRING HOOK RETAINER SCREW
20	552514	*	*	*	*	*	*	1	FEED REGULATING DIAL
21	544947	*	*	*	*	*	*	1	FEED REGULATING DIAL SERRATION PLATE
22	368362	*	*	*	*	*	*	1	FEED REGULATING DIAL CAP SCREW
23	368363	*	*	*	*	*	*	1	FEED REGULATING DIAL CAP SCREW WASHER
24	552515	*	*	—	*	*	—	1	FEED REGULATING STUD
24	554455	—	—	*	—	—	*	1	FEED REGULATING STUD

NO.	PART NO.	141A	141B	141G	541A	541B	541G	QTY	DESCRIPTION
25	368114	*	*	*	*	*	*	1	FEED REGULATING DIAL LOCK PIN
26	545820	*	*	*	*	*	*	1	FEED REGULATING DIAL LOCK PIN SPRING
27	552516	*	*	*	*	*	*	1	FEED REVERSE LEVER
28	552518	*	*	*	*	*	*	1	FEED REVERSE LEVER SHAFT ARM COMP.
29	543831-001	*	*	*	*	*	*	1	FEED REVERSE LEVER SHAFT ARM PIN
30	552521	*	*	*	*	*	*	1	FEED REVERSE LEVER SHAFT ARM PIN COVER
31	368129	*	*	*	*	*	*	1	FEED REVERSE LEVER SHAFT BUSHING
32	368130	*	*	*	*	*	*	1	FEED REVERSE LEVER SPRING
33	375653	*	*	*	*	*	*	1	FEED REVERSE LEVER STOPPER PIN
34	375662	*	*	*	*	*	*	1	FEED REVERSE LEVER STOPPER PIN COVER
35	552552	*	*	*	*	*	*	1	FEED REVERSE LEVER SHAFT COLLAR COMP.
36	374062	*	*	*	*	*	*	1	FEED REVERSE LEVER SHAFT COLLAR SET SCREW
37	544208-005	*	*	*	*	*	*	1	FEED REVERSE LINK STUD SET SCREW

FEED BAR, FEED DRIVING ROCK SHAFT

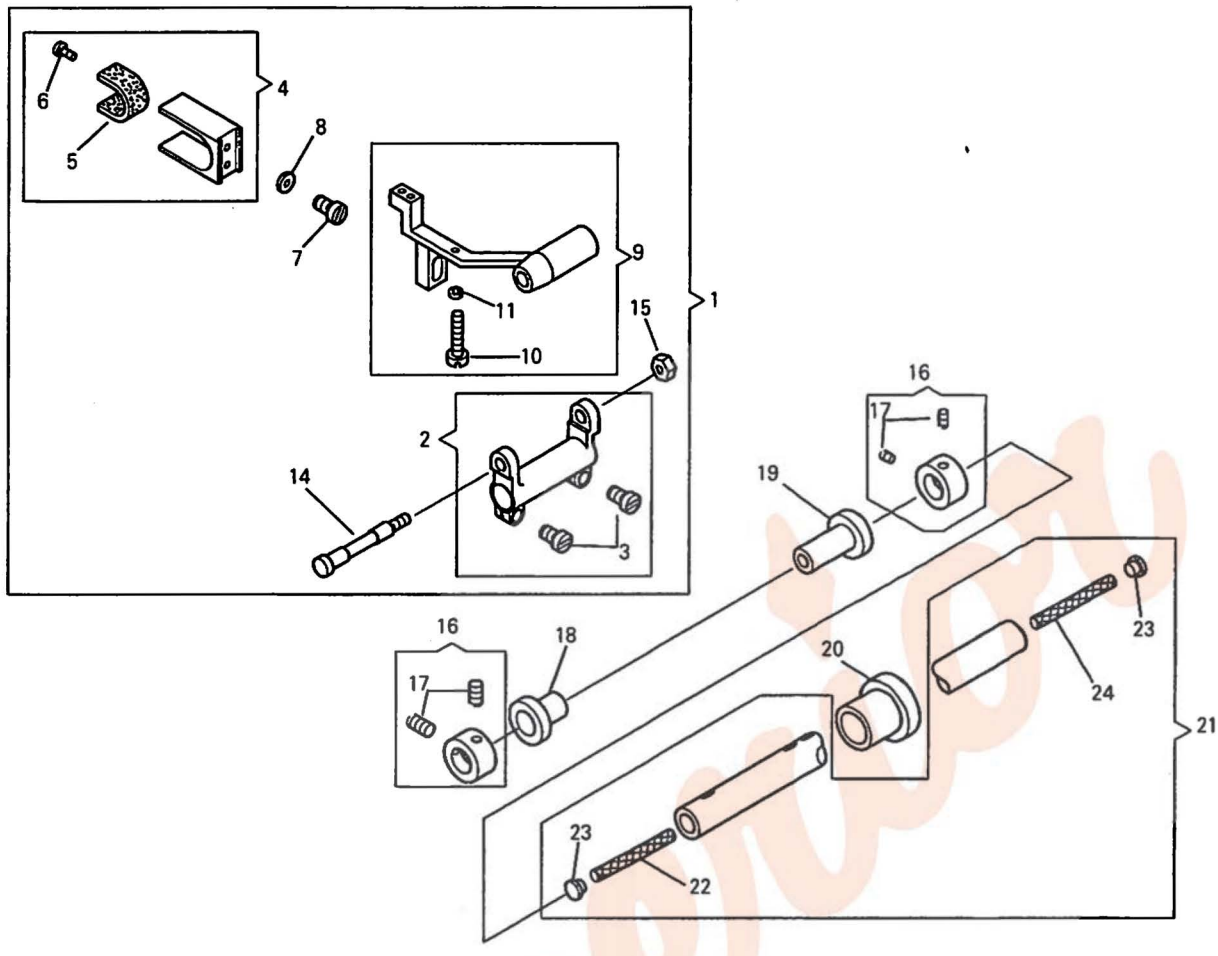

NO.	PART NO.	141A	141B	141G	541A	541B	541G	QTY	DESCRIPTION
1	412177	*	—	—	*	—	—	1	FEED BAR AND FEED DRIVING ROCK FRAME COMP.
1	281086	—	*	*	—	*	*	1	FEED BAR AND FEED DRIVING ROCK FRAME COMP.
2	412022	*	—	—	*	—	—	1	FEED DRIVING ROCK FRAME COMP.
2	281087	—	*	*	—	*	*	1	FEED DRIVING ROCK FRAME COMP.
3	545154	*	*	*	*	*	*	2	FEED DRIVING ROCK FRAME PINCH SCREW
4	412161	*	*	*	*	*	*	1	FEED LIFTING ECCENTRIC FORK COMP.
5	223655	*	*	*	*	*	*	1	FEED LIFTING ECCENTRIC FORK OILING FELT
6	549075	*	*	*	*	*	*	1	FEED LIFTING ECCENTRIC FORK OILING FELT SCREW
7	544411	*	*	*	*	*	*	1	FEED LIFTING ECCENTRIC FORK SCREW
8	543804-025	*	*	*	*	*	*	1	FEED LIFTING ECCENTRIC FORK SCREW WASHER
9	412183	*	—	—	*	—	—	1	FEED BAR COMP.
9	281090	—	*	*	—	*	*	1	FEED BAR COMP.
10	545391	*	*	*	*	*	*	1	FEED DOG SUPPORT SCREW
11	545437	*	*	*	*	*	*	1	FEED DOG SUPPORT SCREW NUT
14	412089	*	—	—	*	—	—	1	FEED BAR HINGE SCREW
14	281091	—	*	*	—	*	*	1	FEED BAR HINGE SCREW
15	545405	*	—	—	*	—	—	1	FEED BAR HINGE SCREW NUT
15	545428	—	*	*	—	*	*	1	FEED BAR HINGE SCREW NUT
16	508327	*	*	*	*	*	*	2	FEED ROCK SHAFT STOP COLLAR COMP.
17	154780	*	*	*	*	*	*	4	FEED ROCK SHAFT STOP COLLAR SET SCREW
18	552523	*	*	*	*	*	*	1	FEED ROCK SHAFT BUSHING (FRONT)
19	367397	*	*	*	*	*	*	1	FEED ROCK SHAFT BUSHING (MIDDLE)
20	552524	*	*	*	*	*	*	1	FEED ROCK SHAFT BUSHING (BACK)
21	552525	*	*	*	*	*	*	1	FEED ROCK SHAFT COMP.
22	554465-004	*	*	*	*	*	*	1	FEED ROCK SHAFT OIL PACKING (WICK) (LONG)
23	502987	*	*	*	*	*	*	2	FEED ROCK SHAFT OIL HOLE PLUG
24	554465-001	*	*	*	*	*	*	1	FEED DRIVING ROCK SHAFT OIL PACKING (WICK) (SHORT)

NO.	PART NO.	141A	141B	141G	541A	541B	541G	QTY	DESCRIPTION

HOOK DRIVING SHAFT, HOOK DRIVING SHAFT CONNECTION BELT PULLEY

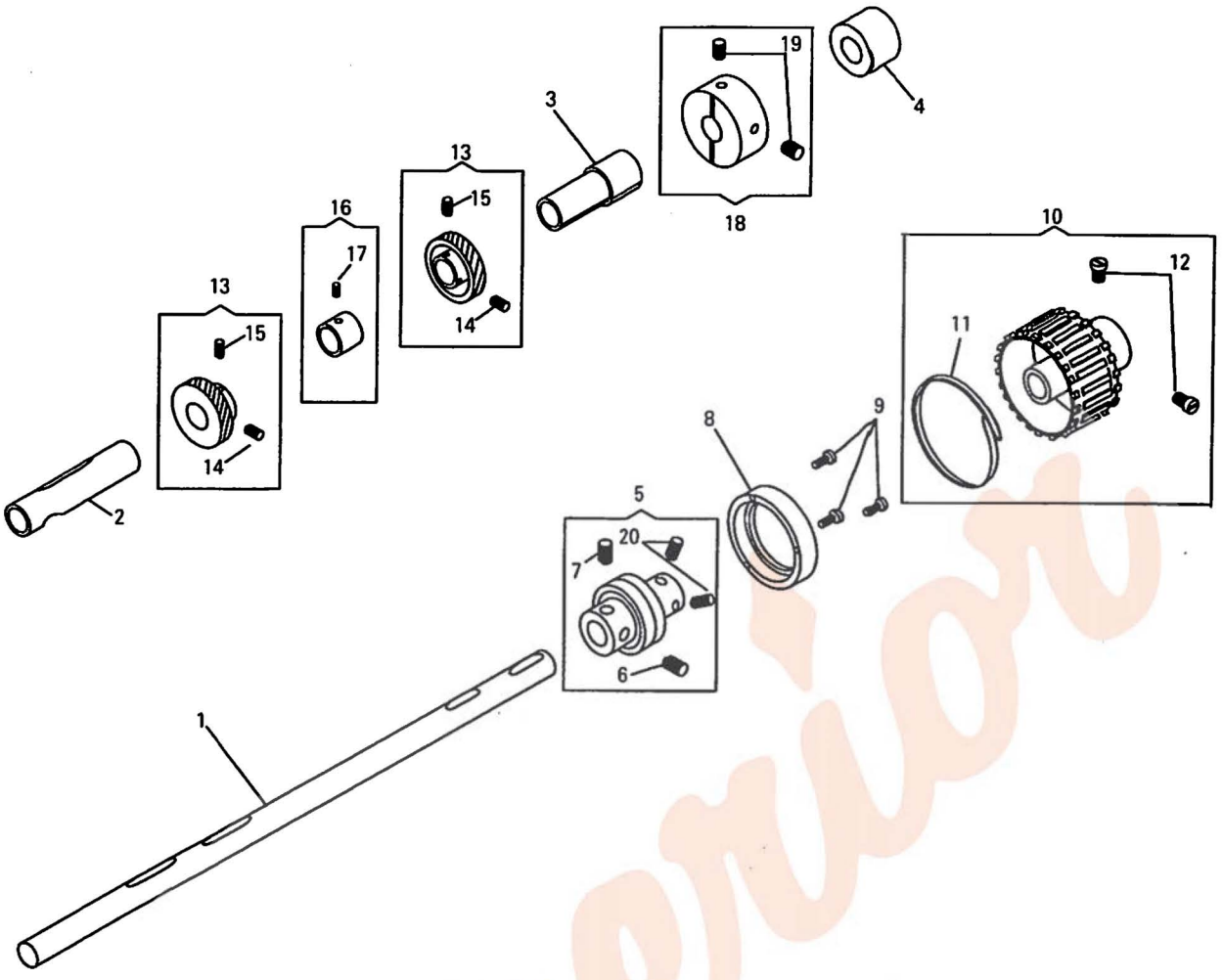

NO.	PART NO.	141A	141B	141G	541A	541B	541G	QTY	DESCRIPTION
1	552528	*	*	*	*	*	*	1	HOOK DRIVING SHAFT
2	267195	*	*	*	*	*	*	1	HOOK SADDLE BEARING (LEFT)
3	416699	*	*	*	*	*	*	1	HOOK SADDLE BEARING (RIGHT)
4	552529	*	*	*	*	*	*	1	HOOK DRIVING SHAFT BUSHING (CENTER)
5	554676	*	*	*	*	*	*	1	HOOK DRIVING SHAFT BALL BEARING COMP.
6	544329	*	*	*	*	*	*	1	HOOK DRIVING SHAFT BALL BEARING COLLAR POSITION SCREW
7	544325	*	*	*	*	*	*	1	HOOK DRIVING SHAFT BALL BEARING COLLAR SET SCREW
8	267063	*	*	*	*	*	*	1	HOOK DRIVING SHAFT BALL BEARING RETAINING WASHER
9	544346	*	*	*	*	*	*	3	HOOK DRIVING SHAFT BALL BEARING RETAINING WASHER SCREW
10	412180	*	*	*	*	*	*	1	HOOK DRIVING SHAFT CONNECTION BELT PULLEY COMP.
11	202253	*	*	*	*	*	*	1	HOOK DRIVING SHAFT CONNECTION BELT PULLEY SPRING FLANGE
12	544385	*	*	*	*	*	*	2	HOOK DRIVING SHAFT CONNECTION BELT PULLEY SET SCREW
13	412034	*	*	*	*	*	*	2	HOOK DRIVING GEAR COMP.
14	544329	*	*	*	*	*	*	2	HOOK DRIVING GEAR POSITION SCREW
15	544325	*	*	*	*	*	*	2	HOOK DRIVING GEAR SET SCREW
16	412026	*	*	*	*	*	*	1	FEED LIFTING ECCENTRIC COMP.
17	544329	*	*	*	*	*	*	1	FEED LIFTING ECCENTRIC SET SCREW
18	552532	*	*	*	*	*	*	1	HOOK DRIVING SHAFT COLLAR COMP.
19	544204-002	*	*	*	*	*	*	2	HOOK DRIVING SHAFT COLLAR SET SCREW
20	545174-452	*	*	*	*	*	*	2	HOOK DRIVING SHAFT BALL BEARING COLLAR SET SCREW

NO.	PART NO.	141A	141B	141G	541A	541B	541G	QTY	DESCRIPTION

HOOK SADDLE (RIGHT), HOOK

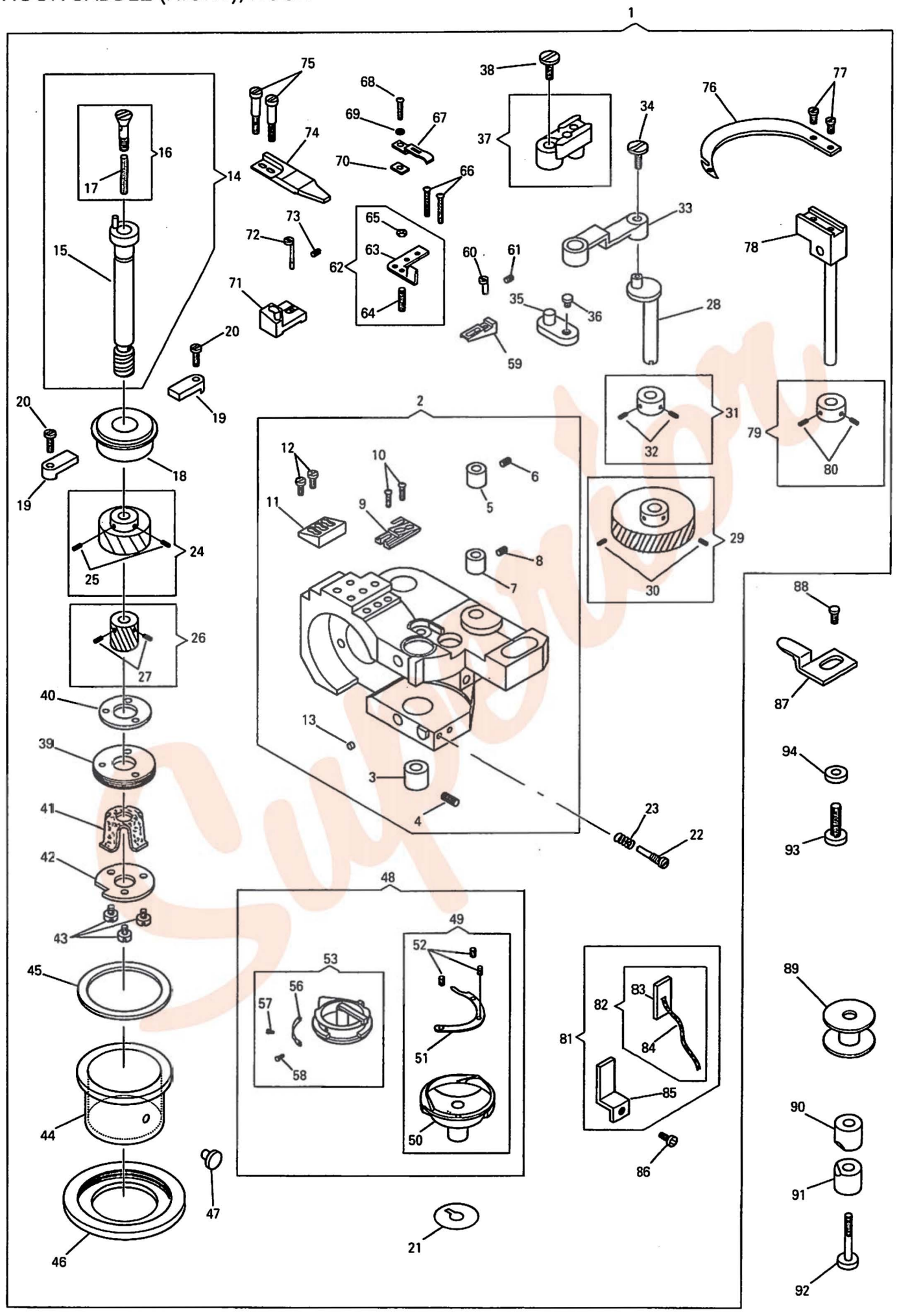

NO.	PART NO.	141A	141B	141G	541A	541B	541G	QTY	DESCRIPTION
1	554460	—	*	*	—	—	—	1	HOOK SADDLE (RIGHT) WITH HOOK COMP.
1	554701	*	—	—	—	—	—	1	HOOK SADDLE (RIGHT) WITH HOOK COMP.
1	554706	—	—	—	*	—	—	1	HOOK SADDLE (RIGHT) WITH HOOK COMP.
1	554711	—	—	—	—	*	*	1	HOOK SADDLE (RIGHT) WITH HOOK COMP.
2	554461	—	*	*	—	—	—	1	HOOK SADDLE (RIGHT) COMP.
2	554702	*	—	—	—	—	—	1	HOOK SADDLE (RIGHT) COMP.
2	554707	—	—	—	*	—	—	1	HOOK SADDLE (RIGHT) COMP.
2	554712	—	—	—	—	*	*	1	HOOK SADDLE (RIGHT) COMP.
3	554643-001	*	*	*	—	—	—	1	HOOK SHAFT BUSHING (LOWER)
3	554643-002	—	—	—	*	*	*	1	HOOK SHAFT BUSHING (LOWER)
4	504020	*	*	*	*	*	*	1	HOOK SHAFT BUSHING (LOWER) SET SCREW
5	282784-001	*	*	*	*	*	*	1	BOBBIN CASE OPENER CAM SHAFT BUSHING (UPPER)
6	544207-011	*	*	*	*	*	*	1	BOBBIN CASE OPENER CAM SHAFT BUSHING (UPPER) SET SCREW
7	282784-002	*	*	*	*	*	*	1	BOBBIN CASE OPENER CAM SHAFT BUSHING (LOWER)
8	544207-011	*	*	*	*	*	*	1	BOBBIN CASE OPENER CAM SHAFT BUSHING (LOWER) SET SCREW
9	281039	—	*	*	—	*	*	1	THREAD PULLER SUPPORT ADJUSTING BLOCK (LOWER)
10	544211-052	—	*	*	—	*	*	2	THREAD PULLER SUPPORT ADJUSTING BLOCK (LOWER) SET SCREW
11	281040	—	*	*	—	*	*	1	STATIONARY KNIFE ADJUSTING BLOCK (LOWER)
12	544211-052	—	*	*	—	*	*	2	STATIONARY KNIFE ADJUSTING BLOCK (LOWER) SET SCREW
13	554641	*	*	*	*	*	*	1	HOOK SADDLE PLUG
14	554646	*	*	*	*	*	*	1	HOOK SHAFT ,HOOK SHAFT OIL WICK HOLDER COMP.
15	554647	*	*	*	*	*	*	1	HOOK SHAFT COMP.
16	554648	*	*	*	*	*	*	1	HOOK SHAFT OIL WICK HOLDER COMP.
17	502928	*	*	*	*	*	*	1	HOOK SHAFT OIL FELT
18	267053	*	*	*	*	*	*	1	HOOK BALL BEARING
19	514173	*	*	*	*	*	*	2	HOOK BALL BEARING RETAINER
20	504010-452	*	*	*	*	*	*	2	HOOK BALL BEARING RETAINER SCREW
21	514170	*	*	*	*	*	*	4	HOOK SPACER
22	554839	*	*	*	*	*	*	1	OIL REGULATING SCREW
23	544958	*	*	*	*	*	*	1	OIL REGULATING SCREW SPRING
24	554644	*	*	*	*	*	*	1	HOOK DRIVING PINION COMP.
25	544325	*	*	*	*	*	*	2	HOOK DRIVING PINION SET SCREW
26	554645	*	*	*	*	*	*	1	BOBBIN CASE OPENER CAM SHAFT ACTUATING GEAR COMP.
27	544207-011	*	*	*	*	*	*	2	BOBBIN CASE OPENER CAM SHAFT ACTUATING GEAR SET SCREW
28	282788	*	*	*	*	*	*	1	BOBBIN CASE OPENER CAM SHAFT GEAR COMP.
29	282789	*	*	*	*	*	*	1	BOBBIN CASE OPENER CAM SHAFT GEAR COMP.
30	544207-011	*	*	*	*	*	*	2	BOBBIN CASE OPENER SHAFT GEAR SET SCREW
31	282790	*	*	*	*	*	*	1	BOBBIN CASE OPENER SHAFT COLOR COMP.
32	544207-011	*	*	*	*	*	*	2	BOBBIN CASE OPENER CAM SHAFT COLOR SET SCREW
33	282791	*	*	*	—	—	—	1	BOBBIN CASE OPENER CRANK LINK
33	282802	—	—	—	*	*	*	1	BOBBIN CASE OPENER CRANK LINK
34	544356	*	*	*	*	*	*	1	BOBBIN CASE OPENER CRANK LINK CAP SCREW
35	412283	*	*	*	*	*	*	1	BOBBIN CASE OPENER CRANK HINGE STUD
36	544383	*	*	*	*	*	*	1	BOBBIN CASE OPENER CRANK HINGE STUD SCREW
37	282792	*	*	*	*	*	*	1	BOBBIN CASE OPENER CRANK COMP.
38	544356	*	*	*	*	*	*	1	BOBBIN CASE OPENER CRANK CAP SCREW
39	554659	*	*	*	*	*	*	1	HOOK SADDLE OIL RESERVOIR BRACKET
40	554668	*	*	*	*	*	*	1	HOOK SADDLE OIL RESERVOIR BRACKET GASKET
41	281046	*	*	*	*	*	*	1	HOOK OIL FELT
42	554608	*	*	*	*	*	*	1	HOOK OIL FELT RETAINER
43	544211-003	*	*	*	*	*	*	3	HOOK OIL FELT RETAINER SCREW
44	554658	*	*	*	*	*	*	1	HOOK SADDLE OIL RESERVOIR
45	554661	*	*	*	*	*	*	1	HOOK SADDLE OIL RESERVOIR GASKET
46	554660	*	*	*	*	*	*	1	HOOK SADDLE OIL RESERVOIR RING

NO.	PART NO.	141A	141B	141G	541A	541B	541G	QTY	DESCRIPTION
47	367314	*	*	*	*	*	*	1	HOOK SADDLE OIL RESERVOIR PLUG
48	554824	*	*	*	—	—	—	1	HOOK AND BOBBIN CASE COMP.
48	554825	—	—	—	*	*	*	1	HOOK AND BOBBIN CASE COMP.
49	554606	*	*	*	—	—	—	1	HOOK COMP.
49	554611	—	—	—	*	*	*	1	HOOK COMP.
50	554607	*	*	*	—	—	—	1	HOOK (BODY)
50	554612	—	—	—	*	*	*	1	HOOK (BODY)
51	281135	*	*	*	—	—	—	1	HOOK GIB
51	412311	—	—	—	*	*	*	1	HOOK GIB
52	201253	*	*	*	—	—	—	2	HOOK GIB SCREW
52	500520	—	—	—	*	*	*	3	HOOK GIB SCREW
53	281136	*	*	*	—	—	—	1	BOBBIN CASE COMP.
53	281146	—	—	—	*	*	*	1	BOBBIN CASE COMP.
56	236083	*	*	*	—	—	—	1	BOBBIN CASE TENSION SPRING
56	510011	—	—	—	*	*	*	1	BOBBIN CASE TENSION SPRING
57	201016	*	*	*	—	—	—	1	BOBBIN CASE TENSION SPRING REGULATING SCREW
57	500519	—	—	—	*	*	*	1	BOBBIN CASE TENSION SPRING REGULATING SCREW
58	200594	*	*	*	—	—	—	1	BOBBIN CASE TENSION SPRING SCREW
58	500518	—	—	—	*	*	*	1	BOBBIN CASE TENSION SPRING SCREW
59	281056	—	*	*	—	*	*	1	THREAD PULLER SUPPORT ADJUSTING BLOCK (UPPER)
60	543376	—	*	*	—	*	*	1	THREAD PULLER SUPPORT ADJUSTING BLOCK (UPPER) ECCENTRIC PIN
61	544207-011	—	*	*	—	*	*	1	THREAD PULLER SUPPORT ADJUSTING BLOCK (UPPER) ECCENTRIC PIN SET SCREW
62	281054	—	*	*	—	*	*	1	THREAD PULLER SUPPORT COMP.
63	281055	—	*	*	—	*	*	1	THREAD PULLER SUPPORT
64	374475	—	*	*	—	*	*	1	TRAPPER ADJUSTING SCREW
65	541159	—	*	*	—	*	*	1	TRAPPER ADJUSTING SCREW NUT
66	374478	—	*	*	—	*	*	2	THREAD PULLER SUPPORT SCREW
67	281057	—	*	*	—	*	*	1	TRAPPER
68	544413	—	*	*	—	*	*	1	TRAPPER SET SCREW
69	408386	—	*	*	—	*	*	1	TRAPPER SET SCREW WASHER
70	548228	—	*	*	—	*	*	1	TRAPPER ADJUSTING WASHER (t=0.13M/M)
71	281059	—	*	*	—	*	*	1	STATIONARY KNIFE ADJUTING BLOCK (UPPER)
72	281060	—	*	*	—	*	*	1	STATIONARY KNIFE ADJUSTING BLOCK (UPPPER) ECCENTRIC PIN
73	544207-011	—	*	*	—	*	*	1	STATIONARY KNIFE ADJUSTING BLOCK (UPPER) ECENTRIC PIN SET SCREW
74	281058	—	*	*	—	*	*	1	STATIONARY KNIFE
75	374476	—	*	*	—	*	*	2	STATIONARY KNIFE SET SCREW
76	281050-001	—	*	*	—	*	*	1	THREAD PULLER
77	544088	—	*	*	—	*	*	2	THREAD PULLER SCREW
78	281051	—	*	*	—	*	*	1	THREAD PULLER RETAINER BRACKET COMP.
79	281064	—	*	*	—	*	*	1	THREAD PULLER RETAINER BRACKET SHAFT COLLAR COMP.
80	544207-011	—	*	*	—	*	*	2	THREAD PULLER RETAINER BRACKET SHAFT COLLAR SET SCREW
81	552891	*	*	*	*	*	*	1	HOOK DRIVING PINION OIL FELT,OIL FELT BRACKET COMP.
82	552892	*	*	*	*	*	*	1	HOOK DRIVING PINION OIL FELT,OIL PACKING (WICK) COMP.
83	552894	*	*	*	*	*	*	1	HOOK DRIVING PINION OIL FELT
84	552895	*	*	*	*	*	*	1	HOOK DRIVING PINION OIL PACKING (WICK)
85	552893	*	*	*	*	*	*	1	HOOK DRIVING PINION OIL FELT BRACKET
86	544211-002	*	*	*	*	*	*	1	HOOK DRIVING PINION OIL FELT BRACKET SCREW
87	282793	*	*	*	*	*	*	1	BOBBIN CASE OPENER
88	549027	*	*	*	*	*	*	1	BOBBIN CASE OPENER SCREW
89	282762	*	*	*	—	—	—	1	BOBBIN
89	282763	—	—	—	*	—	—	1	BOBBIN
89	282764	—	—	—	—	*	*	1	BOBBIN
90	412115	*	*	*	*	*	*	1	PINCH SLEEVE (UPPER)
91	267139	*	*	*	*	*	*	1	PINCH SLEEVE (LOWER)
92	544364	*	*	*	*	*	*	1	PINCH SLEEVE SCREW
93	544334	*	*	*	*	*	*	1	HOOK SADDLE (RIGHT) SCREW
94	225585	*	*	*	*	*	*	1	HOOK SADDLE (RIGHT) SCREW WASHER

HOOK SADDLE (LEFT), HOOK

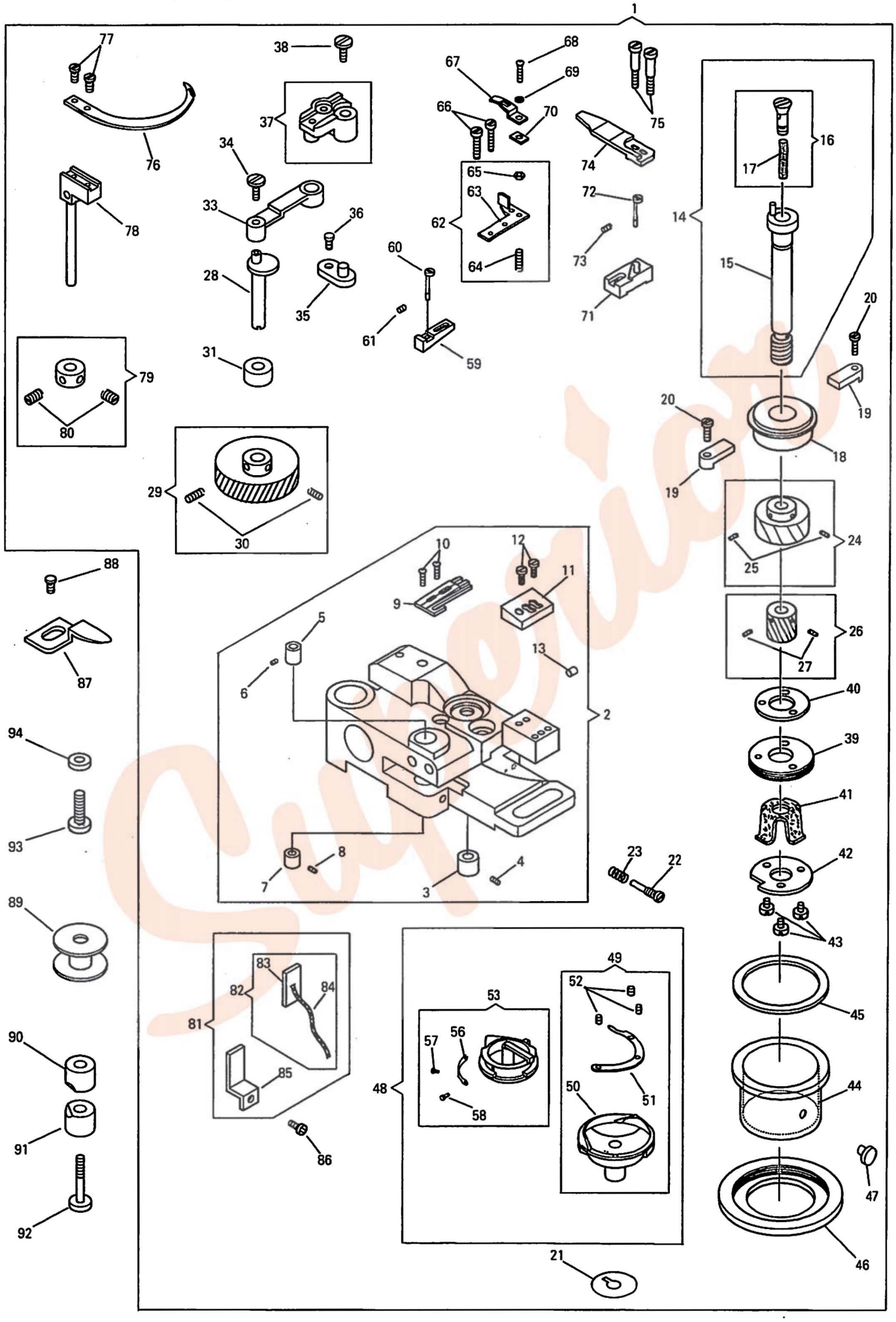

Superior

NO.	PART NO.	141A	141B	141G	541A	541B	541G	QTY	DESCRIPTION
1	554462	—	*	*	—	—	—	1	HOOK SADDLE (LEFT) WITH HOOK COMP.
1	554703	*	—	—	—	—	—	1	HOOK SADDLE (LEFT) WITH HOOK COMP.
1	554708	—	—	—	*	—	—	1	HOOK SADDLE (LEFT) WITH HOOK COMP.
1	554714	—	—	—	—	*	*	1	HOOK SADDLE (LEFT) WITH HOOK COMP.
2	554463	—	*	*	—	—	—	1	HOOK SADDLE (LEFT) COMP.
2	554704	*	—	—	—	—	—	1	HOOK SADDLE (LEFT) COMP.
2	554709	—	—	—	*	—	—	1	HOOK SADDLE (LEFT) COMP.
2	554715	—	—	—	—	*	*	1	HOOK SADDLE (LEFT) COMP.
3	554643-001	*	*	*	—	—	—	1	HOOK SHAFT BUSHING (LOWER)
3	554643-002	—	—	—	*	*	*	1	HOOK SHAFT BUSHING (LOWER)
4	504020	*	*	*	*	*	*	1	HOOK SHAFT BUSHING (LOWER) SET SCREW
5	282784-001	*	*	*	*	*	*	1	BOBBIN CASE OPENER CAM SHAFT BUSHING (UPPER)
6	544207-011	*	*	*	*	*	*	1	BOBBIN CASE OPENER CAM SHAFT BUSHING (UPPER) SET SCREW
7	282797	*	*	*	*	*	*	1	BOBBIN CASE OPENER CAM SHAFT BUSHING (LOWER)
8	544207-011	*	*	*	*	*	*	1	BOBBIN CASE OPENER CAM SHAFT BUSHING (LOWER) SET SCREW
9	281039	—	*	*	—	*	*	1	THREAD PULLER SUPPORT ADJUSTING BLOCK (LOWER)
10	544211-052	—	*	*	—	*	*	2	THREAD PULLER SUPPORT ADJUSTING BLOCK (LOWER) SET SCREW
11	281040	—	*	*	—	*	*	1	STATIONARY KNIFE ADJUSTING BLOCK (LOWER)
12	544211-052	—	*	*	—	*	*	2	STATIONARY KNIFE ADJUSTING BLOCK (LOWER) SET SCREW
13	554641	*	*	*	*	*	*	1	HOOK SADDLE PLUG
14	554646	*	*	*	*	*	*	1	HOOK SHAFT ,HOOK SHAFT OIL WICK HOLDER COMP.
15	554647	*	*	*	*	*	*	1	HOOK SHAFT COMP.
16	554648	*	*	*	*	*	*	1	HOOK SHAFT OIL WICK HOLDER COMP.
17	502928	*	*	*	*	*	*	1	HOOK SHAFT OIL FELT
18	267053	*	*	*	*	*	*	1	HOOK BALL BEARING
19	514173	*	*	*	*	*	*	2	HOOK BALL BEARING RETAINER
20	504010-452	*	*	*	*	*	*	2	HOOK BALL BEARING RETAINER SCREW
21	514170	*	*	*	*	*	*	4	HOOK SPACER
22	554839	*	*	*	*	*	*	1	OIL REGULATING SCREW
23	544958	*	*	*	*	*	*	1	OIL REGULATING SCREW SPRING
24	554644	*	*	*	*	*	*	1	HOOK DRIVING PINION COMP.
25	544325	*	*	*	*	*	*	2	HOOK DRIVING PINION SET SCREW
26	554645	*	*	*	*	*	*	1	BOBBIN CASE OPENER CAM SHAFT ACTUATING GEAR COMP.
27	544207-011	*	*	*	*	*	*	2	BOBBIN CASE OPENER CAM SHAFT ACTUATING GEAR SET SCREW
28	282788	*	*	*	*	*	*	1	BOBBIN CASE OPENER CAM SHAFT
29	282789	*	*	*	*	*	*	1	BOBBIN CASE OPENER CAM SHAFT GEAR COMP.
30	544207-011	*	*	*	*	*	*	2	BOBBIN CASE OPENER SHAFT GEAR SET SCREW
31	282798	*	*	*	*	*	*	1	BOBBIN CASE OPENER SHAFT SPACER
33	282791	*	*	*	—	—	—	1	BOBBIN CASE OPENER CRANK LINK
33	282802	—	—	—	*	*	*	1	BOBBIN CASE OPENER CRANK LINK
34	544356	*	*	*	*	*	*	1	BOBBIN CASE OPENER CRANK LINK CAP SCREW
35	412283	*	*	*	*	*	*	1	BOBBIN CASE OPENER CRANK HINGE STUD
36	544383	*	*	*	*	*	*	1	BOBBIN CASE OPENER CRANK HINGE STUD SCREW
37	282792	*	*	*	*	*	*	1	BOBBIN CASE OPENER CRANK COMP.
38	544356	*	*	*	*	*	*	1	BOBBIN CASE OPENER CRANK CAP SCREW
39	554659	*	*	*	*	*	*	1	HOOK SADDLE OIL RESERVOIR BRACKET
40	554668	*	*	*	*	*	*	1	HOOK SADDLE OIL RESERVOIR BRACKET GASKET
41	281046	*	*	*	*	*	*	1	HOOK OIL FELT
42	554608	*	*	*	*	*	*	1	HOOK OIL FELT RETAINER
43	544211-003	*	*	*	*	*	*	3	HOOK OIL FELT RETAINER SCREW
44	554658	*	*	*	*	*	*	1	HOOK SADDLE OIL RESERVOIR
45	554661	*	*	*	*	*	*	1	HOOK SADDLE OIL RESERVOIR GASKET
46	554660	*	*	*	*	*	*	1	HOOK SADDLE OIL RESERVOIR RING
47	367314	*	*	*	*	*	*	1	HOOK SADDLE OIL RESERVOIR PLUG
48	554824	*	*	*	—	—	—	1	HOOK AND BOBBIN CASE COMP.
48	554825	—	—	—	*	*	*	1	HOOK AND BOBBIN CASE COMP.

NO.	PART NO.	141A	141B	141G	541A	541B	541G	QTY	DESCRIPTION
49	554606	*	*	*	—	—	—	1	HOOK COMP.
49	554611	—	—	—	*	*	*	1	HOOK COMP.
50	554607	*	*	*	—	—	—	1	HOOK (BODY)
50	554612	—	—	—	*	*	*	1	HOOK (BODY)
51	281135	*	*	*	—	—	—	1	HOOK GIB
51	412311	—	—	—	*	*	*	1	HOOK GIB
52	201253	*	*	*	—	—	—	2	HOOK GIB SCREW
52	500520	—	—	—	*	*	*	3	HOOK GIB SCREW
53	281136	*	*	*	—	—	—	1	BOBBIN CASE COMP.
53	281146	—	—	—	*	*	*	1	BOBBIN CASE COMP.
56	236083	*	*	*	—	—	—	1	BOBBIN CASE TENSION SPRING
56	510011	—	—	—	*	*	*	1	BOBBIN CASE TENSION SPRING
57	201016	*	*	*	—	—	—	1	BOBBIN CASE TENSION SPRING REGULATING SCREW
57	500519	—	—	—	*	*	*	1	BOBBIN CASE TENSION SPRING REGULATING SCREW
58	200594	*	*	*	—	—	—	1	BOBBIN CASE TENSION SPRING SCREW
58	500518	—	—	—	*	*	*	1	BOBBIN CASE TENSION SPRING SCREW
59	281056	—	*	*	—	*	*	1	THREAD PULLER SUPPORT ADJUSTING BLOCK (UPPER)
60	543376	—	*	*	—	*	*	1	THREAD PULLER SUPPORT ADJUSTING BLOCK (UPPER) ECCENTRIC PIN
61	544207-011	—	*	*	—	*	*	1	THREAD PULLER SUPPORT ADJUSTING BLOCK (UPPER) ECCENTRIC PIN SET SCREW
62	281054	—	*	*	—	*	*	1	THREAD PULLER SUPPORT COMP.
63	281055	—	*	*	—	*	*	1	THREAD PULLER SUPPORT
64	374475	—	*	*	—	*	*	1	TRAPPER ADJUSTING SCREW
65	541159	—	*	*	—	*	*	1	TRAPPER ADJUSTING SCREW NUT
66	374478	—	*	*	—	*	*	2	THREAD PULLER SUPPORT SCREW
67	281057	—	*	*	—	*	*	1	TRAPPER
68	544413	—	*	*	—	*	*	1	TRAPPER SET SCREW
69	408386	—	*	*	—	*	*	1	TRAPPER SET SCREW WASHER
70	548228	—	*	*	—	*	*	1	TRAPPER ADJUSTING WASHER (t=0.13M/M)
71	281059	—	*	*	—	*	*	1	STATIONARY KNIFE ADJUTING BLOCK (UPPER)
72	281060	—	*	*	*	—	*	1	STATIONARY KNIFE ADJUSTING BLOCK (UPPPER) ECCENTRIC PIN
73	544207-011	—	*	*	—	*	*	1	STATIONARY KNIFE ADJUSTING BLOCK (UPPER) ECENTRIC PIN SET SCREW
74	281058	—	*	*	—	*	*	1	STATIONARY KNIFE
75	374476	—	*	*	—	*	*	2	STATIONARY KNIFE SET SCREW
76	281050-001	—	*	*	—	*	*	1	THREAD PULLER
77	544088	—	*	*	—	*	*	2	THREAD PULLER SCREW
78	281051	—	*	*	—	*	*	1	THREAD PULLER RETAINER BRACKET COMP.
79	281064	—	*	*	—	*	*	1	THREAD PULLER RETAINER BRACKET SHAFT COLLAR COMP.
80	544207-011	—	*	*	—	*	*	2	THREAD PULLER RETAINER BRACKET SHAFT COLLAR SET SCREW
81	552891	*	*	*	*	*	*	1	HOOK DRIVING PINION OIL FELT,OIL FELT BRACKET COMP.
82	552892	*	*	*	*	*	*	1	HOOK DRIVING PINION OIL FELT,OIL PACKING (WICK) COMP.
83	552894	*	*	*	*	*	*	1	HOOK DRIVING PINION OIL FELT
84	552895	*	*	*	*	*	*	1	HOOK DRIVING PINION OIL PACKING (WICK)
85	552893	*	*	*	*	*	*	1	HOOK DRIVING PINION OIL FELT BRACKET
86	544211-002	*	*	*	*	*	*	1	HOOK DRIVING PINION OIL FELT BRACKET SCREW
87	282793	*	*	*	*	*	*	1	BOBBIN CASE OPENER
88	549027	*	*	*	*	*	*	1	BOBBIN CASE OPENER SCREW
89	282762	*	*	*	—	—	—	1	BOBBIN
89	282763	—	—	—	*	—	—	1	BOBBIN
89	282764	—	—	—	—	*	*	1	BOBBIN
90	412115	*	*	*	*	*	*	1	PINCH SLEEVE (UPPER)
91	267139	*	*	*	*	*	*	1	PINCH SLEEVE (LOWER)
92	544364	*	*	*	*	*	*	1	PINCH SLEEVE SCREW
93	414742	*	*	*	*	*	*	1	HOOK SADDLE (LEFT) SCREW
94	225585	*	*	*	*	*	*	1	HOOK SADDLE (LEFT) SCREW WASHER

LUBRICATION (PLUNGER PUMP)

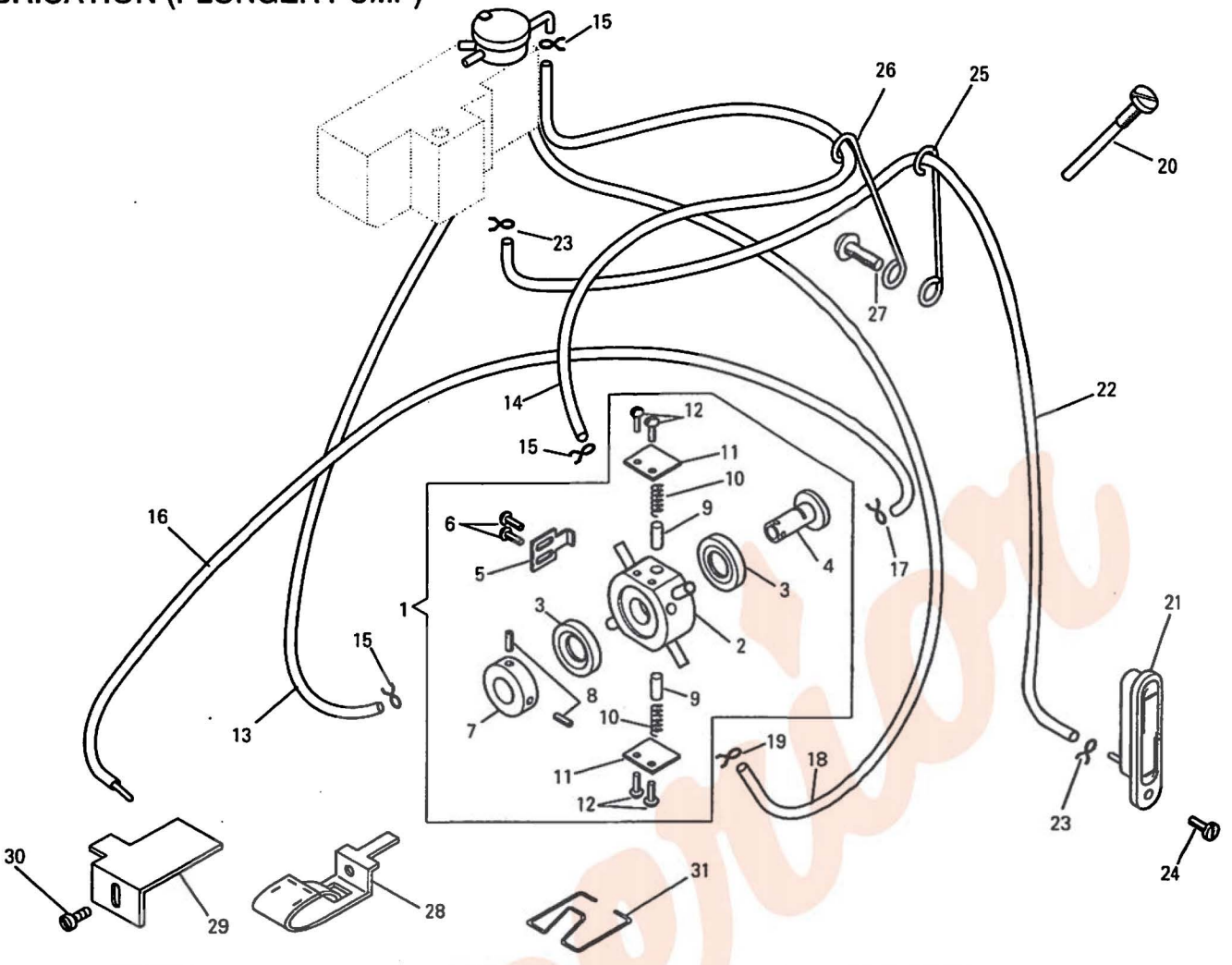

NO.	PART NO.	141A	141B	141G	541A	541B	541G	QTY	DESCRIPTION
1	554346	*	*	*	*	*	*	1	PLUNGER PUMP COMP.
2	554347	*	*	*	*	*	*	1	PLUNGER PUMP (BODY) COMP.
3	554349	*	*	*	*	*	*	2	OIL SEAL.
4	554351	*	*	*	*	*	*	1	PLUNGER PUMP ROTOR
5	554353	*	*	*	*	*	*	1	PLUNGER PUMP ROTER RETAINER
6	544211-002	*	*	*	*	*	*	2	PLUNGER PUMP ROTER RETAINER SCREW
7	554352	*	*	*	*	*	*	1	PLUNGER PUMP ROTOR COLLAR
8	549293	*	*	*	*	*	*	2	PLUNGER PUMP ROTOR COLLAR SET SCREW
9	540556	*	*	*	*	*	*	2	PLUNGER PUMP PISTON
10	410710	*	*	*	*	*	*	2	PLUNGER PUMP PISTON SPRING
11	554354	*	*	*	*	*	*	2	PLUNGER PUMP PISTON SPRING RETAINER
12	544211-002	*	*	*	*	*	*	4	PLUNGER PUMP PISTON SPRING RETAINER SCREW
13	552826	*	*	*	*	*	*	1	OIL TUBE (SUCTION)
14	552827	*	*	*	*	*	*	1	OIL TUBE (DISCHARGE)
15	552809	*	*	*	*	*	*	3	OIL TUBE CLIP
16	552833	*	*	*	*	*	*	1	OIL REMOVING TUBE (SUCTION) COMP.
17	552810	*	*	*	*	*	*	1	OIL REMOVING TUBE CLIP
18	554464	*	*	*	*	*	*	1	OIL REMOVING TUBE (DISCHARGE)
19	552810	*	*	*	*	*	*	1	OIL REMOVING TUBE (DISCHARGE) CLIP
20	374543	*	*	*	*	*	*	1	PLUNGER PUMP SUPPORT SCREW
21	552546-401	*	*	*	*	*	*	1	OIL GAUGE COMP.
22	552828	*	*	*	*	*	*	1	OIL TUBE (FOR OIL GAUGE)
23	552809	*	*	*	*	*	*	2	OIL TUBE (FOR OIL GAUGE) CLIP
24	545071	*	*	*	*	*	*	1	OIL GAUGE SCREW
25	554537	*	*	*	*	*	*	1	OIL TUBE RETAINER (FOR OIL GAUGE)
26	552829	*	*	*	*	*	*	1	OIL TUBE RETAINER (FOR DISCHARGE)
27	544217-052	*	*	*	*	*	*	1	OIL TUBE RETAINER SCREW
28	554306	*	*	*	*	*	*	1	OIL REMOVING LINT SCREEN
29	554433	*	*	*	*	*	*	1	OIL REMOVING LINT SCREEN BRACKET

NO.	PART NO.	141A	141B	141G	541A	541B	541G	QTY	DESCRIPTION
30	544269	*	*	*	*	*	*	1	OIL REMOVING LINT SCREEN BRACKET SCREW
31	554860	*	*	*	*	*	*	1	OIL REMOVING LINT SCREEN RETAINER

LUBRICATION (OIL RESERVOIR)

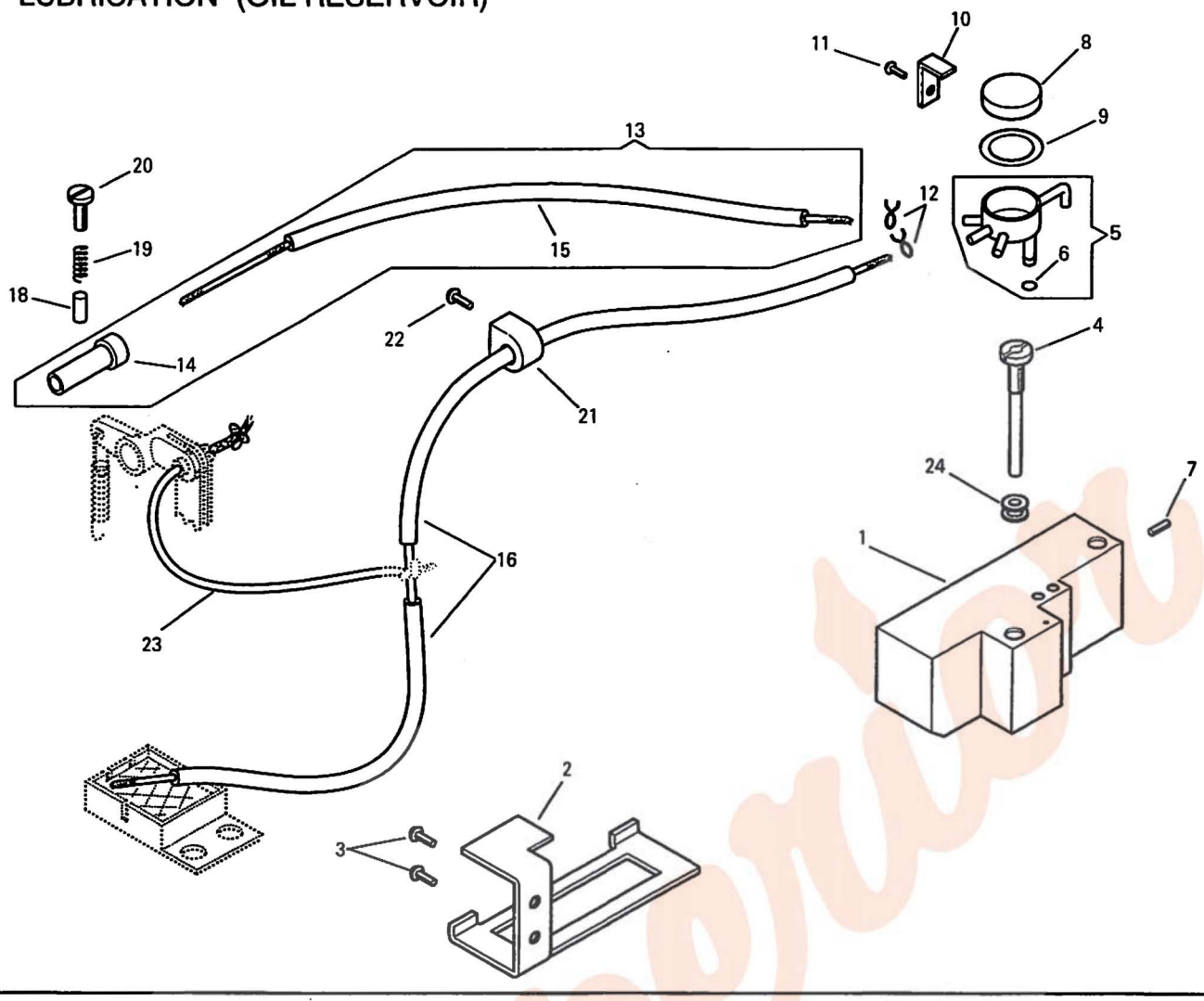

NO.	PART NO.	141A	141B	141G	541A	541B	541G	QTY	DESCRIPTION
1	552548	*	*	*	*	*	*	1	OIL RESERVOIR
2	552550	*	*	*	*	*	*	1	OIL RESERVOIR BRACKET
3	374399-002	*	*	*	*	*	*	2	OIL RESERVOIR BRACKET SCREW
4	374560	*	*	*	*	*	*	1	OIL SUPPLY SLEEVE SCREW
5	554362	*	*	*	*	*	*	1	OIL DISTRIBUTOR AND O-RING COMP.
6	543871-006	*	*	*	*	*	*	1	OIL DISTRIBUTOR O-RING
7	544202-002	*	*	*	*	*	*	1	OIL DISTRIBUTOR SCREW
8	552507	*	*	*	*	*	*	1	OIL DISTRIBUTOR CAP
9	554439	*	*	*	*	*	*	1	OIL DISTRIBUTOR CAP O-RING
10	552476	*	*	*	*	*	*	1	OIL DISTRIBUTOR CAP RETAINER
11	544216-001	*	*	*	*	*	*	1	OIL DISTRIBUTOR CAP RETAINER SCREW
12	552809	*	*	*	*	*	*	2	OIL DISTRIBUTOR TUBE CLIP
13	554314	*	*	*	*	*	*	1	TAKE-UP LEVER OIL TUBE, OIL FLOW ADJUSTING RUBBER SLEEVE COMP.
14	554313	*	*	*	*	*	*	1	TAKE-UP LEVER OIL FLOW ADJUSTING RUBBER SLEEVE
15	552830	*	*	*	*	*	*	1	TAKE-UP LEVER OIL TUBE AND WICK COMP.
16	552831	*	*	*	*	*	*	1	OIL TUBE (FOR BED) COMP.
18	554311	*	*	*	*	*	*	1	TAKE-UP LEVER OIL FLOW ADJUSTING PIN
19	554863	*	*	*	*	*	*	1	TAKE-UP LEVER OIL FLOW ADJUSTING SCREW SPRING
20	544290	*	*	*	*	*	*	1	TAKE-UP LEVER OIL FLOW ADJUSTING SCREW
21	554528	*	*	*	*	*	*	1	OIL FLOW ADJUSTING COLLAR
22	545136-452	*	*	*	*	*	*	1	OIL FLOW ADJUSTING COLLAR SCREW
23	554523	*	*	*	*	*	*	1	FEED REGULATOR SHAFT ARM STUD OIL WICK
24	543883	*	*	*	*	*	*	1	OIL RESERVOIR GROMMETS

NO.	PART NO.	141A	141B	141G	541A	541B	541G	QTY	DESCRIPTION

LUBRICATION (BED AREA)

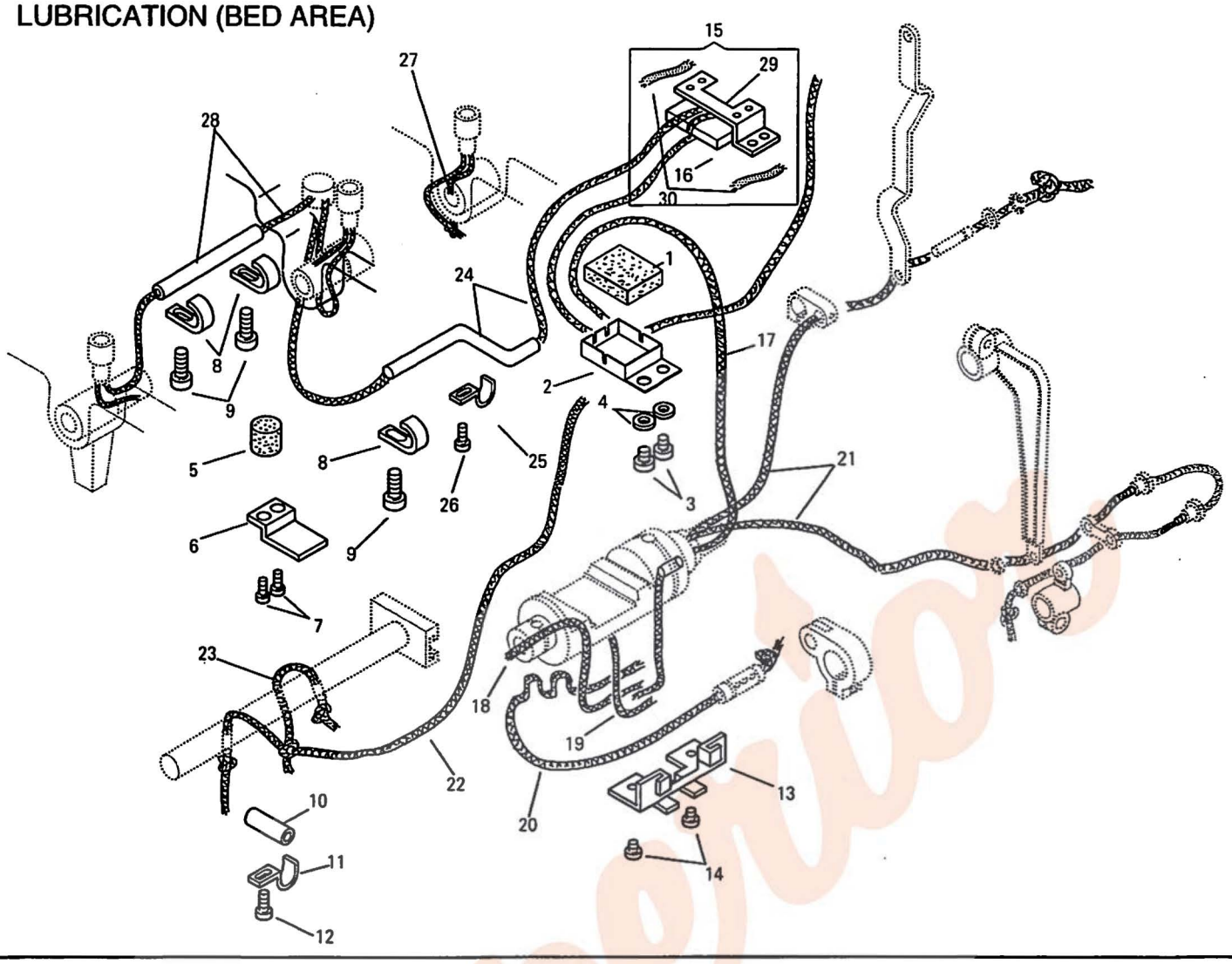

NO.	PART NO.	141A	141B	141G	541A	541B	541G	QTY	DESCRIPTION
1	552551	*	*	*	*	*	*	1	BED OIL FELT
2	552552	*	*	*	*	*	*	1	BED OIL FELT BARCKET
3	544212-052	*	*	*	*	*	*	2	BED OIL FELT BRACKET SCREW
4	543803-003	*	*	*	*	*	*	2	BED OIL FELT BRACKET SCREW WASHER
5	552553	*	*	*	*	*	*	1	HOOK DRIVING SHAFT OIL FELT
6	552554	*	*	*	*	*	*	1	HOOK DRIVING SHAFT OIL FELT BRACKET
7	544212-051	*	*	*	*	*	*	2	HOOK DRIVING SHAFT OIL FELT BRACKET SCREW
8	552555	*	*	*	*	*	*	3	HOOK DRIVING SHAFT OIL WICK TUBE RETAINER
9	544212-051	*	*	*	*	*	*	3	HOOK DRIVING SHAFT OIL WICK TUBE RETAINER SCREW
10	552556	*	*	*	*	*	*	1	FEED ROCK SHAFT OIL WICK TUBE
11	418604	*	*	*	*	*	*	1	FEED ROCK SHAFT OIL WICK TUBE RETAINER
12	544212-051	*	*	*	*	*	*	1	FEED ROCK SHAFT OIL WICK TUBE RETAINER SCREW
13	552557	*	*	*	*	*	*	1	FEED ROCK SHAFT DRIVING FRAME OIL WICK BRACKET
14	544212-001	*	*	*	*	*	*	2	FEED ROCK SHAFT DRIVING FRAME OIL WICK BRACKET SCREW
15	554440	*	*	*	*	*	*	1	FEED DRIVING ECCENTRIC CONNECTION FELT COMP.
16	554441	*	*	*	*	*	*	1	FEED DRIVING ECCENTRIC CONNECTION FELT
17	554465-006	*	*	*	*	*	*	1	FEED ROCK SHAFT DRIVING FRAME OIL WICK (LONG)
18	554465-011	*	*	*	*	*	*	1	FEED ROCK SHAFT DRIVING FRAME OIL WICK (SHORT)
19	554524	*	*	*	*	*	*	1	FEED ROCK SHAFT DRIVING LINK OIL WICK
20	554465-007	*	*	*	*	*	*	1	FEED ROCK SHAFT CRANK PIN OIL WICK
21	554465-005	*	*	*	*	*	*	1	NEEDLE BAR ROCK FRAME ROCK SHAFT CRANK OIL WICK
22	554465-013	*	*	*	*	*	*	1	FEED ROCK SHAFT OIL WICK
23	554465-012	*	*	*	*	*	*	1	FEED ROCK SHAFT OIL WICK (RIGHT)
24	554467	*	*	*	*	*	*	1	HOOK DRIVING SHAFT OIL TUBE AND WICK
25	418604	*	*	*	*	*	*	1	HOOK DRIVING SHAFT OIL TUBE RETAINER (SMALL)
26	544212-051	*	*	*	*	*	*	1	HOOK DRIVING SHAFT OIL TUBE RETAINER (SMALL) SCREW
27	554465-010	*	*	*	*	*	*	1	HOOK DRIVING SHAFT BUSHING (CENTER) OIL WICK
28	554468	*	*	*	*	*	*	1	HOOK DRIVING SHAFT BUSHING (FRONT) OIL TUBE COMP.
29	554442	*	*	*	*	*	*	1	FEED DRIVING ECCENTRIC CONNECTION FELT BRACKET
30	554781	*	*	*	*	*	*	1	FEED DRIVING ECCENTRIC CONNECTION FELT CORD.

TENSION

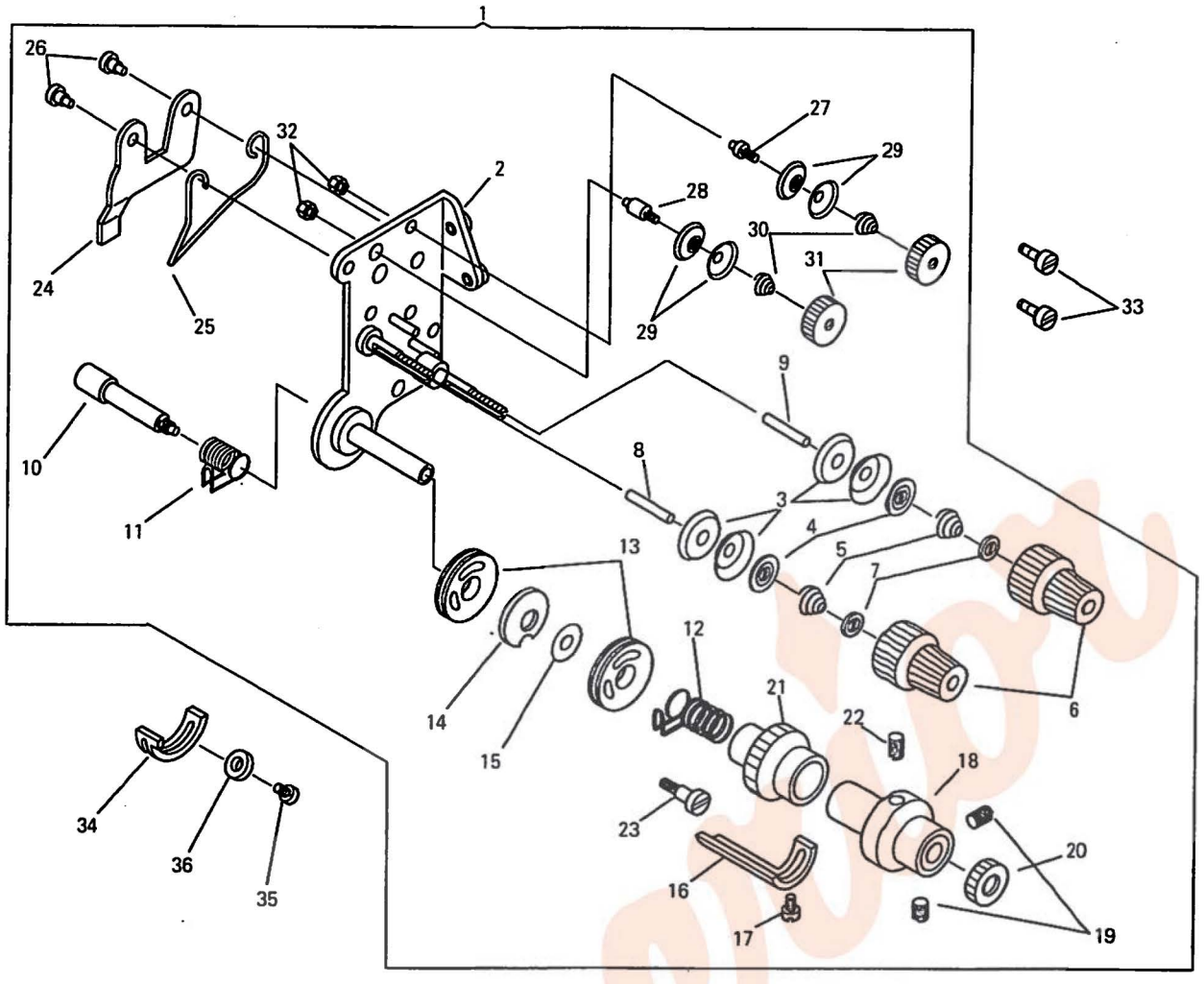

NO.	PART NO.	141A	141B	141G	541A	541B	541G	QTY	DESCRIPTION
1	552558	*	*	*	*	*	*	1	TENSION BRACKET COMP.
2	552559	*	*	*	*	*	*	1	TENSION BRACKET BODY COMP.
3	2102	*	*	*	*	*	*	4	TENSION DISC
4	414273	*	*	*	*	*	*	2	TENSION RELEASE WASHER
5	552836	*	*	*	*	*	*	2	TENSION SPRING
6	552838	*	*	*	*	*	*	2	TENSION REGULATING THUMB NUT
7	411154	*	*	*	*	*	*	2	TENSION REGULATING THUMB NUT WASHER
8	552563-001	*	*	*	*	*	*	1	TENSION RELEASE PLUNGER (SHORT)
9	552563-003	*	*	*	*	*	*	1	TENSION RELEASE PLUNGER (LONG)
10	552843	*	*	*	*	*	*	1	THREAD CONTROLLER STUD
11	552565	*	*	*	*	*	*	1	THREAD CONTROLLER SPRING (BACK)
12	552842	*	*	*	*	*	*	1	THREAD CONTROLLER SPRING (FRONT)
13	412202	*	*	*	*	*	*	2	THREAD CONTROLLER DISC
14	552900	*	*	*	*	*	*	1	THREAD CONTROLLER DISC WASHER (LARGE)
15	367380	*	*	*	*	*	*	1	THREAD CONTROLLER DISC WASHER (SMALL)
16	552839	*	*	*	*	*	*	1	THREAD CONTROLLER SPRING (FRONT) STOP
17	544211-001	*	*	*	*	*	*	1	THREAD CONTROLLER SPRING (FRONT) STOP SCREW
18	552840	*	*	*	*	*	*	1	THREAD CONTROLLER SPRING HOLDER SLEEVE
19	544202-002	*	*	*	*	*	*	2	THREAD CONTROLLER SPRING HOLDER SLEEVE SCREW
20	552841	*	*	*	*	*	*	1	THREAD CONTROLLER STUD NUT
21	552845	*	*	*	*	*	*	1	THREAD CONTROLLER SPRING HOLDER
22	544203-001	*	*	*	*	*	*	1	THREAD CONTROLLER SPRING HOLDER SCREW
23	414770	*	*	*	*	*	*	1	THREAD CONTROLLER DISC SCREW
24	417124	*	*	*	*	*	*	1	TENSION RELEASE PLATE
25	412200	*	*	*	*	*	*	1	TENSION RELEASE PLATE SPRING
26	544343	*	*	*	*	*	*	2	TENSION RELEASE PLATE SCREW

NO.	PART NO.	141A	141B	141G	541A	541B	541G	QTY	DESCRIPTION
27	552567	*	*	*	*	*	*	1	PRE-TENSION STUD (SHORT)
28	552568	*	*	*	*	*	*	1	PRE-TENSION STUD (LONG)
29	417122	*	*	*	*	*	*	4	PRE-TENSION DISC
30	417123	*	*	*	*	*	*	2	PRE-TENSION SPRING
31	414784	*	*	*	*	*	*	2	PRE-TENSION THUMB NUT
32	414783	*	*	*	*	*	*	2	PRE-TENSION STUD LOCK NUT
33	549168	*	*	*	*	*	*	2	TENSION BRACKET SCREW
34	412419	*	*	*	*	*	*	1	THREAD CONTROLLER SPRING (BACK) STOP
35	545092	*	*	*	*	*	*	1	THREAD CONTROLLER SPRING (BACK) STOP SCREW
36	543805-003	*	*	*	*	*	*	1	THREAD CONTROLLER SPRING (BACK) STOP SCREW WASHER

BOBBIN WINDER

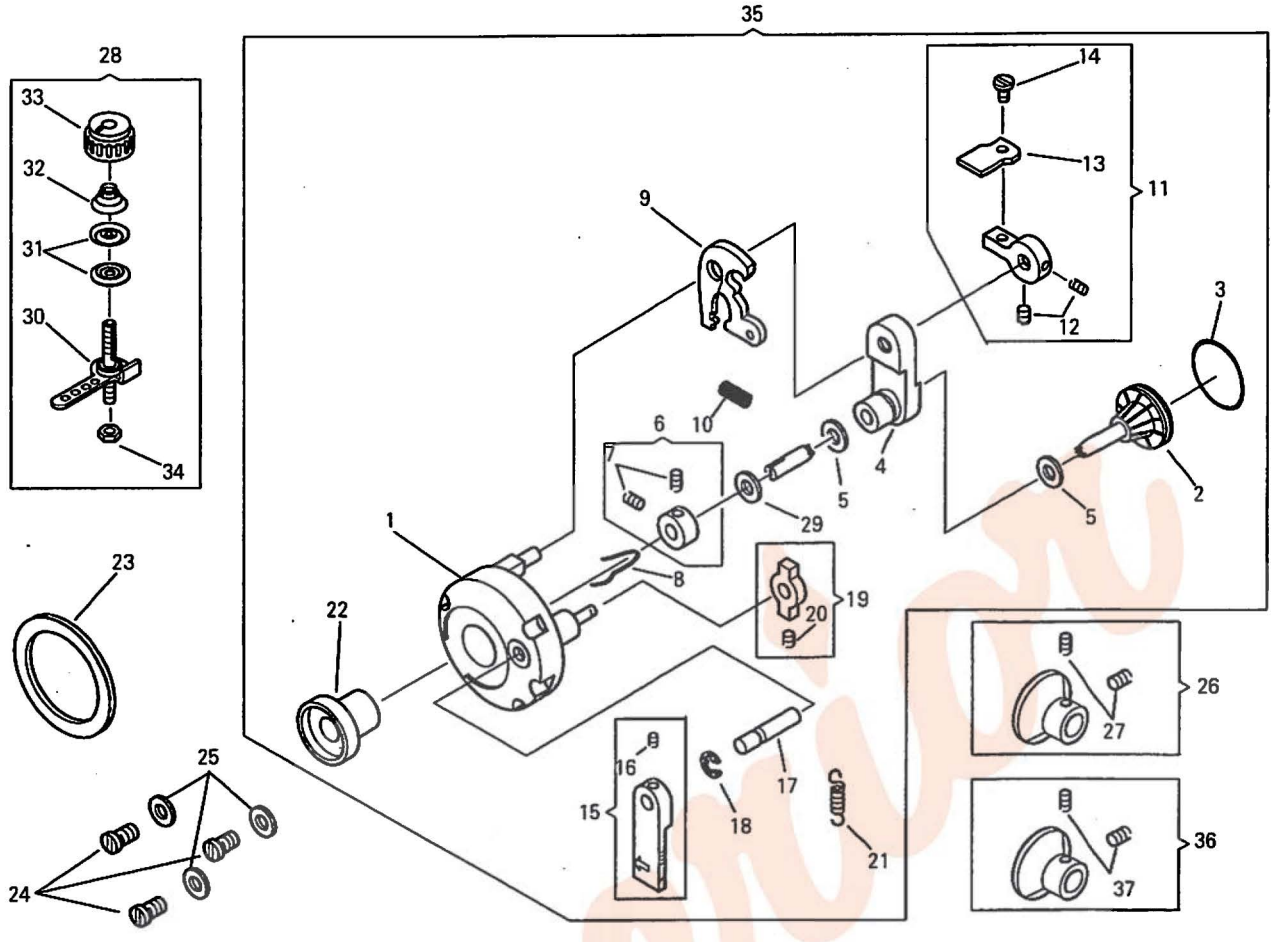

NO.	PART NO.	141A	141B	141G	541A	541B	541G	QTY	DESCRIPTION
1	552570	*	*	*	*	*	*	2	BOBBIN WINDER (BODY)
2	552573	*	*	*	*	*	*	2	BOBBIN WINDER PULLEY
3	543871-020	*	*	*	*	*	*	2	BOBBIN WINDER PULLEY RING
4	552575	*	*	*	*	*	*	2	BOBBIN WINDER BRACKET
5	546844	*	*	*	*	*	*	4	BOBBIN WINDER SPINDLE THRUST WASHER
6	282758	*	*	*	*	*	*	2	BOBBIN WINDER SPINDLE STOP COLLAR COMPLETE
7	544206-011	*	*	*	*	*	*	4	BOBBIN WINDER SPINDLE STOP COLLAR SET SCREW
8	282995	*	*	*	*	*	*	2	BOBBIN WINDER SPINDLE SPRING
9	282757	*	*	*	*	*	*	2	BOBBIN WINDER BRACKET ACTUATING PLATE
10	282994	*	*	*	*	*	*	2	BOBBIN WINDER BRACKET SPRING
11	552576	*	*	*	*	*	*	2	BOBBIN WINDER STOPPER BRACKET COMP.
12	544207-013	*	*	*	*	*	*	4	BOBBIN WINDER STOPPER BRACKET SCREW
13	552577	*	*	*	*	*	*	2	BOBBIN WINDER STOPPER
14	374398-002	*	*	*	*	*	*	2	BOBBIN WINDER STOPPER SCREW
15	552578	*	*	*	*	*	*	2	BOBBIN WINDER STOP LATCH COMPLETE
16	544208-005	*	*	*	*	*	*	2	BOBBIN WINDER STOP LATCH SET SCREW
17	368025	*	*	*	*	*	*	2	BOBBIN WINDER STOP LATCH STUD
18	543860-005	*	*	*	*	*	*	2	BOBBIN WINDER STOP LATCH STUD SNAP RING
19	368026	*	*	*	*	*	*	2	BOBBIN WINDER REGULATOR COMPLETE
20	544208-005	*	*	*	*	*	*	2	BOBBIN WINDER REGULATOR SET SCREW
21	544865	*	*	*	*	*	*	2	BOBBIN WINDER SPRING
22	282759-451	*	*	*	*	*	*	2	BOBBIN WINDER SPINDLE THREAD GUARD
23	554312	*	*	*	*	*	*	2	BOBBIN WINDER PACKING
24	544217-001	*	*	*	*	*	*	6	BOBBIN WINDER SCREW
25	543803-003	*	*	*	*	*	*	6	BOBBIN WINDER SCREW WASHER

NO.	PART NO.	141A	141B	141G	541A	541B	541G	QTY	DESCRIPTION
26	554409	*	*	*	*	*	*	1	BOBBIN WINDER DRIVING WHEEL (RIGHT) COMPLETE
27	544207-012	*	*	*	*	*	*	2	BOBBIN WINDER DRIVING WHEEL (RIGHT) SET SCREW
28	552579	*	*	*	*	*	*	2	BOBBIN WINDER TENSION COMPLETE
29	543804-005	*	*	*	—	—	—	2	BOBBIN WINDER BRACKET THRUST WASHER
30	552580	*	*	*	*	*	*	2	BOBBIN WINDER TENSION STUD COMP.
31	547247	*	*	*	*	*	*	4	BOBBIN WINDER TENSION DISC
32	547246	*	*	*	*	*	*	2	BOBBIN WINDER TENSION SPRING
33	368033	*	*	*	*	*	*	2	BOBBIN WINDER TENSION REGULATINGTHUMB NUT
34	541186	*	*	*	*	*	*	2	BOBBIN WINDER TENSION STUD,LOCK NUT
35	554669-385	*	*	*	—	—	—	2	BOBBIN WINDER COMP.
35	552569	—	—	—	*	*	*	2	BOBBIN WINDER COMP.
36	554853	*	*	*	*	*	*	1	BOBBIN WINDER DRIVING WHEEL (LEFT) COMPLETE
37	544207-012	*	*	*	*	*	*	2	BOBBIN WINDER DRIVING WHEEL (LEFT) SET SCREW

THREAD TRIMMER 1

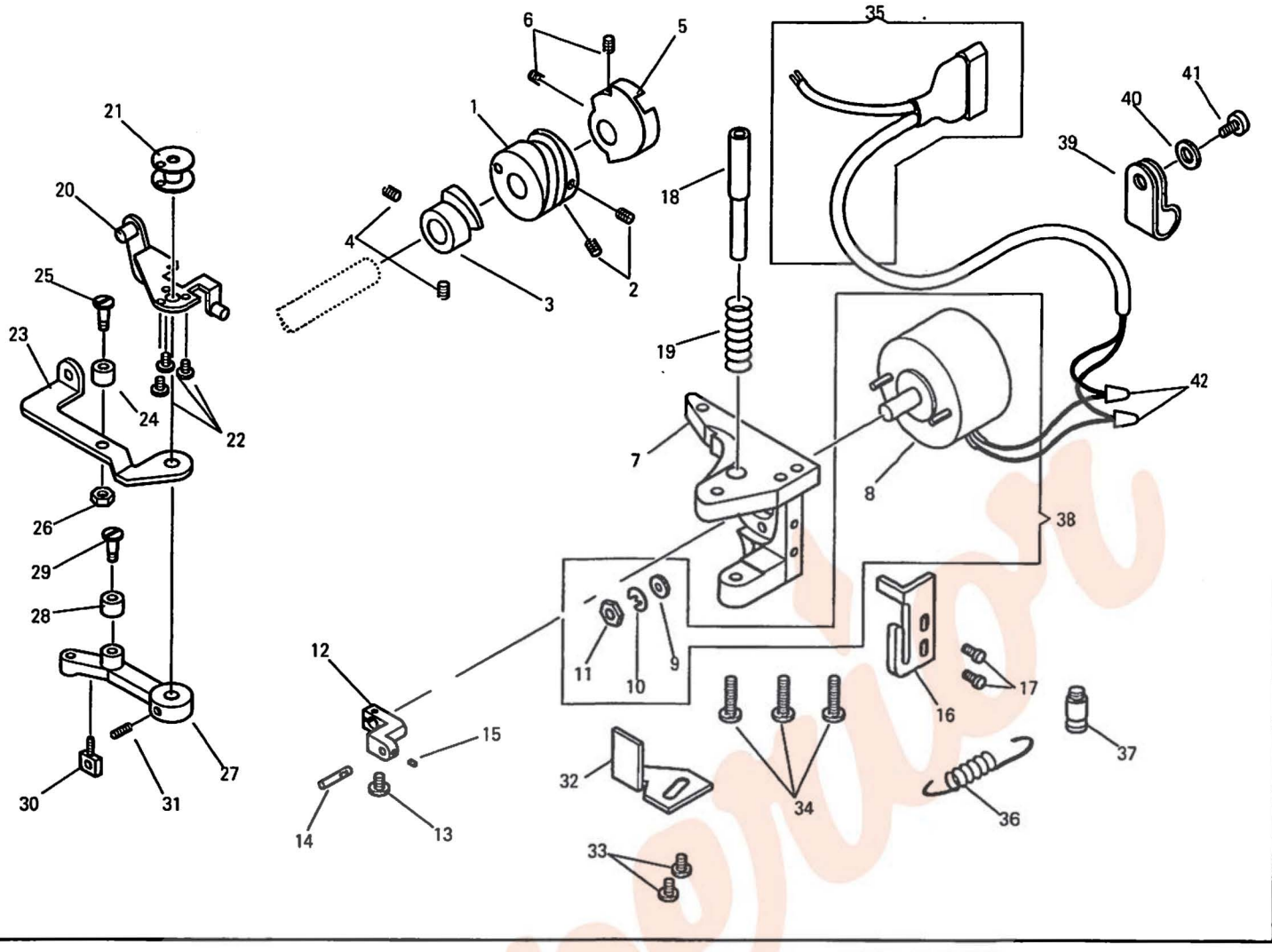

NO.	PART NO.	141A	141B	141G	541A	541B	541G	QTY	DESCRIPTION
1	281184	—	*	*	—	*	*	1	TRIMMER CAM
2	374029	—	*	*	—	*	*	2	TRIMMER CAM SET SCREW
3	281013	—	*	*	—	*	*	1	TENSION RELEASING CAM
4	504028	—	*	*	—	*	*	2	TENSION RELEASING CAM SET SCREW
5	281014	—	*	*	—	*	*	1	TRIMMER POSITIVE MOTION CAM
6	544208-005	—	*	*	—	*	*	2	TRIMMER POSITIVE MOTION CAM SET SCREW
7	552585	—	*	*	—	*	*	1	TRIMMER SOLENOID BRACKET
8	369334	—	*	*	—	*	*	1	TRIMMER SOLENOID
9	543804-003	—	*	*	—	*	*	2	TRIMMER SOLENOID WASHER
10	543805-003	—	*	*	—	*	*	2	TRIMMER SOLENOID SPRING WASHER
11	541165-003	—	*	*	—	*	*	2	TRIMMER SOLENOID NUT
12	552586	—	*	*	—	*	*	1	TRIMMER SOLENOID ARM
13	545095	—	*	*	—	*	*	1	TRIMMER SOLENOID ARM SCREW
14	416772	—	*	*	—	*	*	1	TRIMMER SOLENOID ARM PIN
15	545072	—	*	*	—	*	*	1	TRIMMER SOLENOID ARM PIN SCREW
16	281020	—	*	*	—	*	*	1	TRIMMER SOLENOID ARM STOPPER
17	190-850	—	*	*	—	*	*	2	TRIMMER SOLENOID ARM STOPPER SCREW
18	281021	—	*	*	—	*	*	1	TRIMMER LEVER SHAFT
19	281096	—	*	*	—	*	*	1	TRIMMER LEVER SHAFT SPRING
20	281023	—	*	*	—	*	*	1	TRIMMER POSITIVE MOTION BRACKET COMPLETE
21	416777	—	*	*	—	*	*	1	TRIMMER POSITIVE MOTION BRACKET BOSS
22	549120	—	*	*	—	*	*	3	TRIMMER POSITIVI MOTION BRACKET BOSS SCREW
23	552588	—	*	*	—	*	*	1	TENSION RELEASE DRIVING LEVER
24	416780	—	*	*	—	*	*	1	TENSION RELEASING CAM ROLLER
25	414773-451	—	*	*	—	*	*	1	TENSION RELEASING CAM ROLLER SCREW
26	545409	—	*	*	—	*	*	1	TENSION RELEASING CAM ROLLER SCREW LOCK NUT
27	552590	—	*	*	—	*	*	1	TRIMMER LEVER
28	416780	—	*	*	—	*	*	1	TRIMMER CAM ROLLER
29	414773-451	—	*	*	—	*	*	1	TRIMMER CAM ROLLER SCREW
30	545264	—	*	*	—	*	*	1	TRIMMER LEVER RETURN SPRING HOOK

NO.	PART NO.	141A	141B	141G	541A	541B	541G	QTY	DESCRIPTION
31	544208-005	—	*	*	—	*	*	1	TRIMMER LEVER SET SCREW
32	552591	—	*	*	—	*	*	1	TRIMMER LEVER STOPPER
33	414508	—	*	*	—	*	*	2	TRIMMER LEVER STOPPER SCREW
34	544352	—	*	*	—	*	*	3	TRIMEMR SOLENOID BRACKET SCREW
35	554469	—	—	*	—	—	*	1	TRIMMER,BACK TACK SOLENOID CORD COMP.
35	554723	—	*	—	—	*	—	1	TRIMMER SOLENOID CORD COMP.
36	552592	—	*	*	—	*	*	1	TRIMMER LEVER RETURN SPRING
37	374307	—	*	*	—	*	*	1	TRIMMER LEVER RETURN SPRING STUD
38	369333	—	*	*	—	*	*	1	TRIMMER SOLENOID COMP.
39	542766-002	—	*	*	—	*	*	4	TRIMMER SOLENOID CORD RETAINER
40	543803-002	—	*	*	—	*	*	4	TRIMMER SOLENOID CORD WASHER
41	504010-452	—	*	*	—	*	*	4	TRIMMER SOLENOID CORD SCREW
42	417142-001	—	*	*	—	*	*	2	TRIMMER SOLENOID WIRE CONNECTOR

THREAD TRIMMER 2

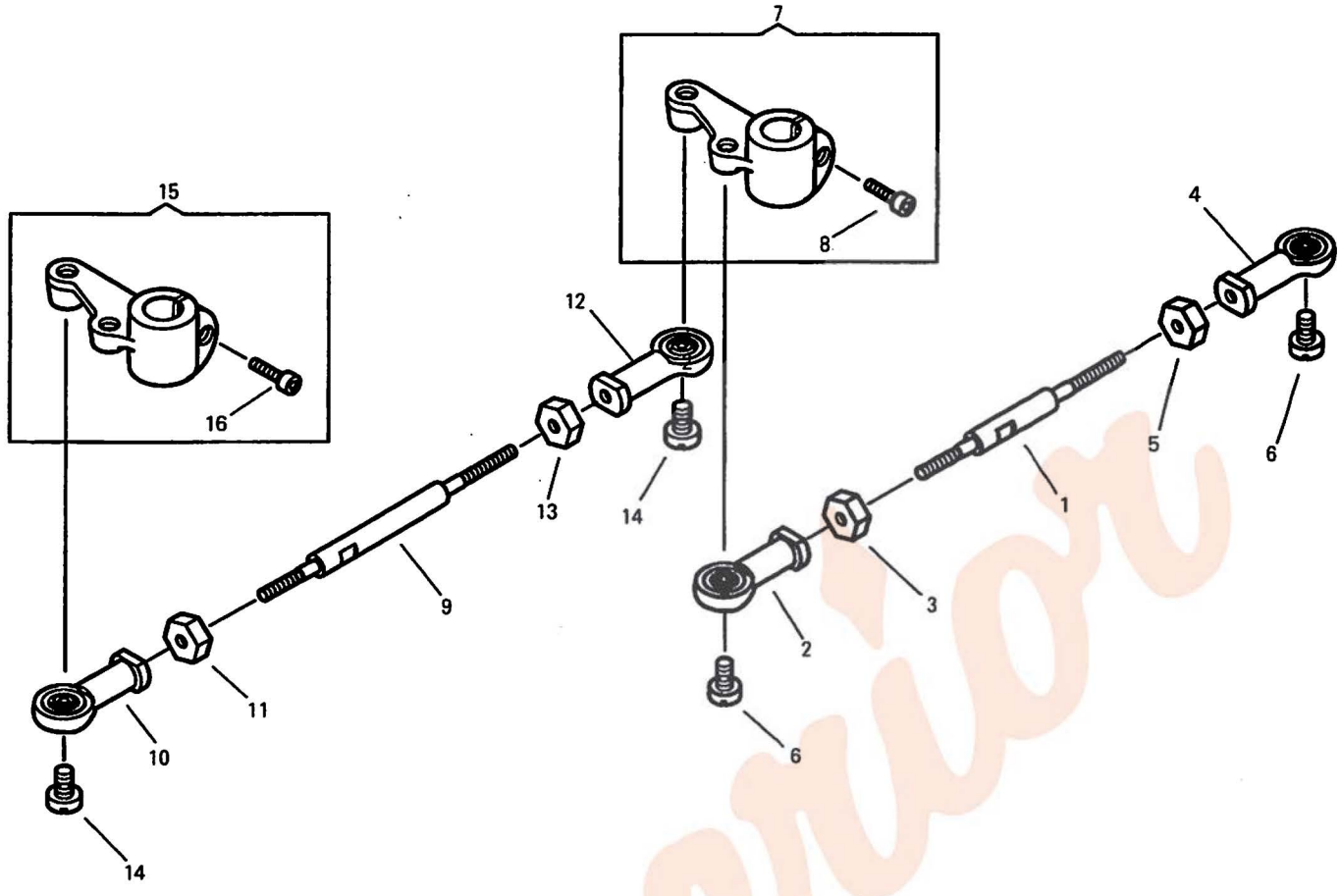

NO.	PART NO.	141A	141B	141G	541A	541B	541G	QTY	DESCRIPTION
1	554654-001	—	*	*	—	*	*	1	TRIMMER ROD FOR DRIVING ARM (RIGHT)
2	416781-101	—	*	*	—	*	*	1	TRIMMER ROD END (LEFT)
3	414774	—	*	*	—	*	*	1	TRIMMER ROD END (LEFT) NUT
4	416781-001	—	*	*	—	*	*	1	TRIMMER ROD END (RIGHT)
5	541166-001	—	*	*	—	*	*	1	TRIMMER ROD END (RIGHT) NUT
6	414775	—	*	*	—	*	*	2	TRIMMER ROD END SCREW
7	281074	—	*	*	—	*	*	1	THREAD PULLER DRIVING ARM (RIGHT) COMPLETE
8	374107-004	—	*	*	—	*	*	1	THREAD PULLER DRIVING ARM (RIGHT) SCREW
9	416783-007	—	*	*	—	*	*	1	TRIMMER ROD FOR DRIVING ARM (LEFT)
10	416781-101	—	*	*	—	*	*	1	TRIMMER ROD END (LEFT)
11	414774	—	*	*	—	*	*	1	TRIMMER ROD END (LEFT) NUT
12	416781-001	—	*	*	—	*	*	1	TRIMMER ROD END (RIGHT)
13	541166-001	—	*	*	—	*	*	1	TRIMMER ROD END (RIGHT) NUT
14	414775	—	*	*	—	*	*	2	TRIMMER ROD END SCREW
15	281074	—	*	*	—	*	*	1	THREAD PULLER DRIVING ARM (LEFT) COMPLETE
16	374107-004	—	*	*	—	*	*	1	THREAD PULLER DRIVING ARM (LEFT) SCREW

NO.	PART NO.	141A	141B	141G	541A	541B	541G	QTY	DESCRIPTION

TENSION RELEASING

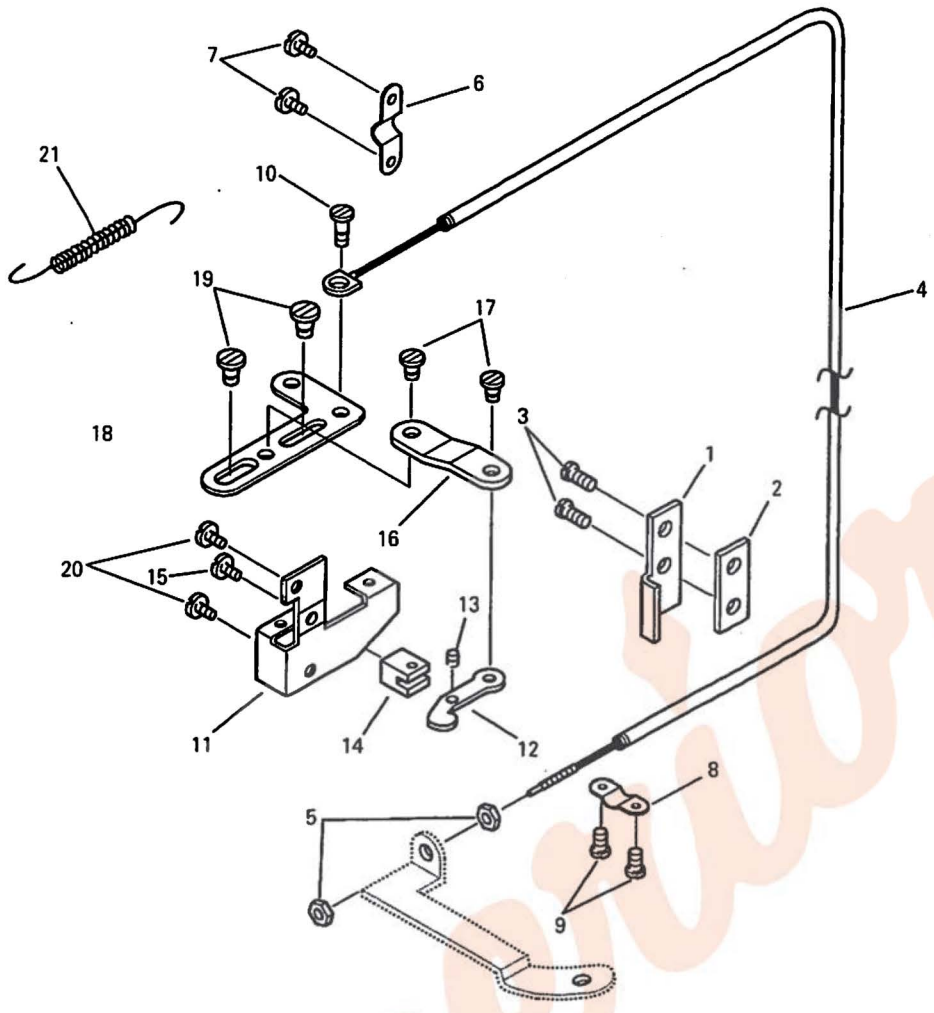

NO.	PART NO.	141A	141B	141G	541A	541B	541G	QTY	DESCRIPTION
1	552593	—	*	*	—	*	*	1	TENSION RELEASE DRIVING LEVER STOPPER
2	552594	—	*	*	—	*	*	1	TENSION RELEASE DRIVING LEVER STOPPER RETAINING PLATE
3	414780	—	*	*	—	*	*	2	TENSION RELEASE DRIVING LEVER STOPPER SCREW
4	552595	—	*	*	—	*	*	1	TENSION RELEASE WIRE GUIDE, TUBE COMPLETE
5	541166-003	—	*	*	—	*	*	2	TENSION RELEASE WIRE STAKING PIPE LOCK NUT
6	543327	—	*	*	—	*	*	1	TENSION RELEASE WIRE GUIDE TUBE CLAMPING PLATE (UPPER)
7	504010-452	—	*	*	—	*	*	2	TENSION RELEASE WIRE GUIDE TUBE CLAMPING PLATE (UPPER) SCREW
8	543327	—	*	*	—	*	*	1	TENSION RELEASE WIRE GUIDE TUBE CLAMPING PLATE (LOWER)
9	504010-452	—	*	*	—	*	*	2	TENSION RELEASE WIRE GUIDE TUBE CLAMPING PLATE (LOWER) SCREW
10	544144	—	*	*	—	*	*	1	TENSION RELEASE WIRE SHEAVE SCREW
11	552601	—	*	*	—	*	*	1	TENSION RELEASE LEVER BRACKET
12	552602	—	*	*	—	*	*	1	TENSION RELEASE LEVER
13	552603	—	*	*	—	*	*	1	TENSION RELEASE LEVER PIN
14	552604	—	*	*	—	*	*	1	TENSION RELEASE LEVER BLOCK
15	544256	—	*	*	—	*	*	1	TENSION RELEASE LEVER BLOCK SCREW
16	552605	—	*	*	—	*	*	1	TENSION RELEASE LEVER LINK
17	368247	—	*	*	—	*	*	2	TENSION RELEASE LEVER LINK HINGE SCREW
18	552606	—	*	*	—	*	*	1	TENSION RELEASE ACTUATING SLIDE PLATE
19	368247	—	*	*	—	*	*	2	TENSION RELEASE ACTUATING SLIDE PLATE HINGE SCREW
20	544111-452	—	*	*	—	*	*	2	TENSION RELEASE LEVER BRACKET SCREW
21	281593	—	*	*	—	*	*	1	TENSION RELEASE ACTUATING SLIDE PLATE SPRING

NO.	PART NO.	141A	141B	141G	541A	541B	541G	QTY	DESCRIPTION

BACK TACK MECHANISM

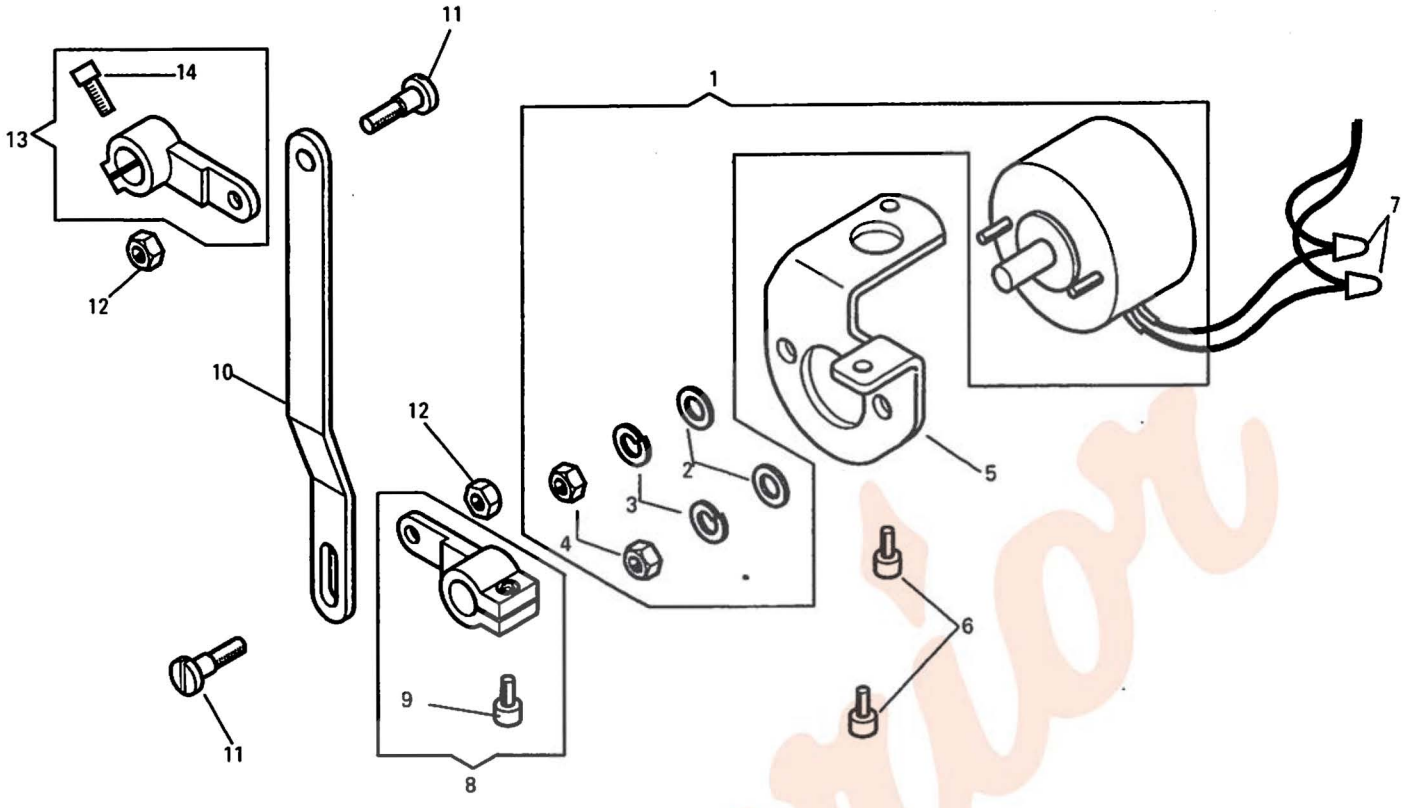

NO.	PART NO.	141A	141B	141G	541A	541B	541G	QTY	DESCRIPTION
1	369335	–	–	*	–	–	*	1	BACK TACK SOLENOID COMPLETE
2	543804-005	–	–	*	–	–	*	2	BACK TACK SOLENOID WASHER
3	543805-005	–	–	*	–	–	*	2	BACK TACK SOLENOID SPRING WASHER
4	541167-003	–	–	*	–	–	*	2	BACK TACK SOLENOID NUT
5	552609	–	–	*	–	–	*	1	BACK TACK SOLENOID BRACKET
6	544214-002	–	–	*	–	–	*	2	BACK TACK SOLENOID BRACKET SCREW
7	417142-001	–	–	*	–	–	*	2	BACK TACK SOLENOID WIRE CONNECTOR
8	552610	–	–	*	–	–	*	1	BACK TACK SOLENOID ARM COMPLETE
9	549183	–	–	*	–	–	*	1	BACK TACK SOLENOID ARM PINCH SCREW
10	552612	–	–	*	–	–	*	1	BACK TACK SOLENOID LINK
11	374546	–	–	*	–	–	*	2	BACK TACK SOLENOID LINK HINGE SCREW
12	417410	–	–	*	–	–	*	2	BACK TACK SOLENOID LINK HINGE SCREW NUT
13	552613	–	–	*	–	–	*	1	FEED REVERSE LEVER SHAFT ACTUATING ARM COMPLETE
14	374107-004	–	–	*	–	–	*	1	FEED REVERSE LEVER SHAFT ACTUATING ARM PINCH SCREW

NO.	PART NO.	141A	141B	141G	541A	541B	541G	QTY	DESCRIPTION

BACK TACK SWITCH

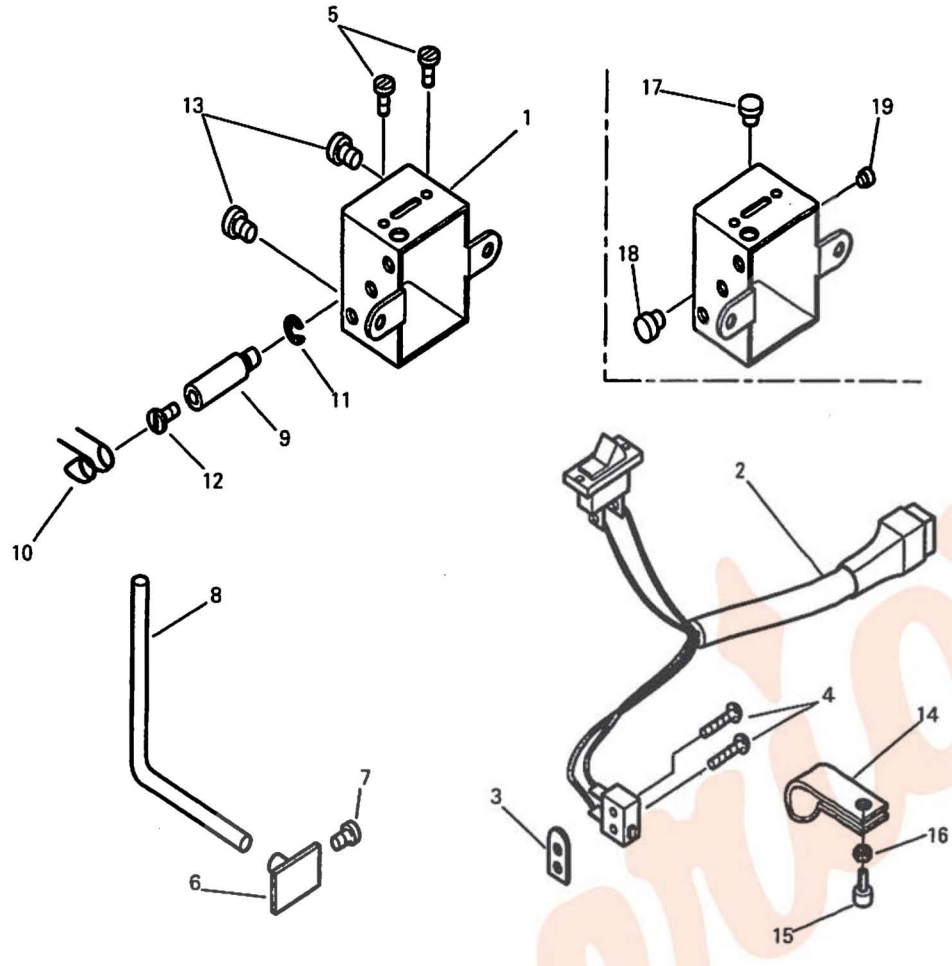

NO.	PART NO.	141A	141B	141G	541A	541B	541G	QTY	DESCRIPTION
1	552616	—	*	*	—	*	*	1	WIPER, BACK TACK SWITCH BOX
2	419009	—	*	*	—	*	*	1	WIPER, BACK TACK SWITCH CORD, CONNECTOR COMP.
3	368467	—	*	*	—	*	*	1	BACK TACK SWITCH PLATE
4	544211-056	—	*	*	—	*	*	2	BACK TACK SWITCH PLATE SCREW
5	544211-001	—	*	*	—	*	*	2	WIPER SWITCH SCREW
6	376146	—	—	*	—	—	*	1	BACK TACK SWITCH LEVER BUTTON
7	374110-002	—	—	*	—	—	*	1	BACK TACK SWITCH LEVER BUTTON SCREW
8	552618	—	—	*	—	—	*	1	BACK TACK SWITCH LEVER
9	375733	—	—	*	—	—	*	1	BACK TACK SWITCH LEVER SHAFT
10	375732	—	—	*	—	—	*	1	BACK TACK SWITCH LEVER SPRING
11	543801-015	—	—	*	—	—	*	1	BACK TACK SWITCH LEVER SHAFT SNAP RING
12	545246-452	—	—	*	—	—	*	1	BACK TACK SWITCH LEVER SCREW
13	544217-052	—	*	*	—	*	*	2	WIPER, BACK TACK SWITCH BOX SCREW
14	542766-005	—	*	*	—	*	*	1	WIPER, BACK TACK SWITCH CORD CLIP
15	504010-452	—	*	*	—	*	*	1	WIPER, BACK TACK SWITCH CORD CLIP SCREW
16	543803-002	—	*	*	—	*	*	1	WIPER, BACK TACK SWITCH CORD CLIP SCREW WASHER
17	414245	—	*	—	—	*	—	1	WIPER SWITCH BOX RUBBER PLUG (MIDDLE)
18	420255	—	*	—	—	*	—	1	WIPER SWITCH BOX RUBBER PLUG (LARGE)
19	418400	—	*	—	—	*	—	1	WIPER SWITCH BOX RUBBER PLUG (SMALL)

NO.	PART NO.	141A	141B	141G	541A	541B	541G	QTY	DESCRIPTION

WIPER

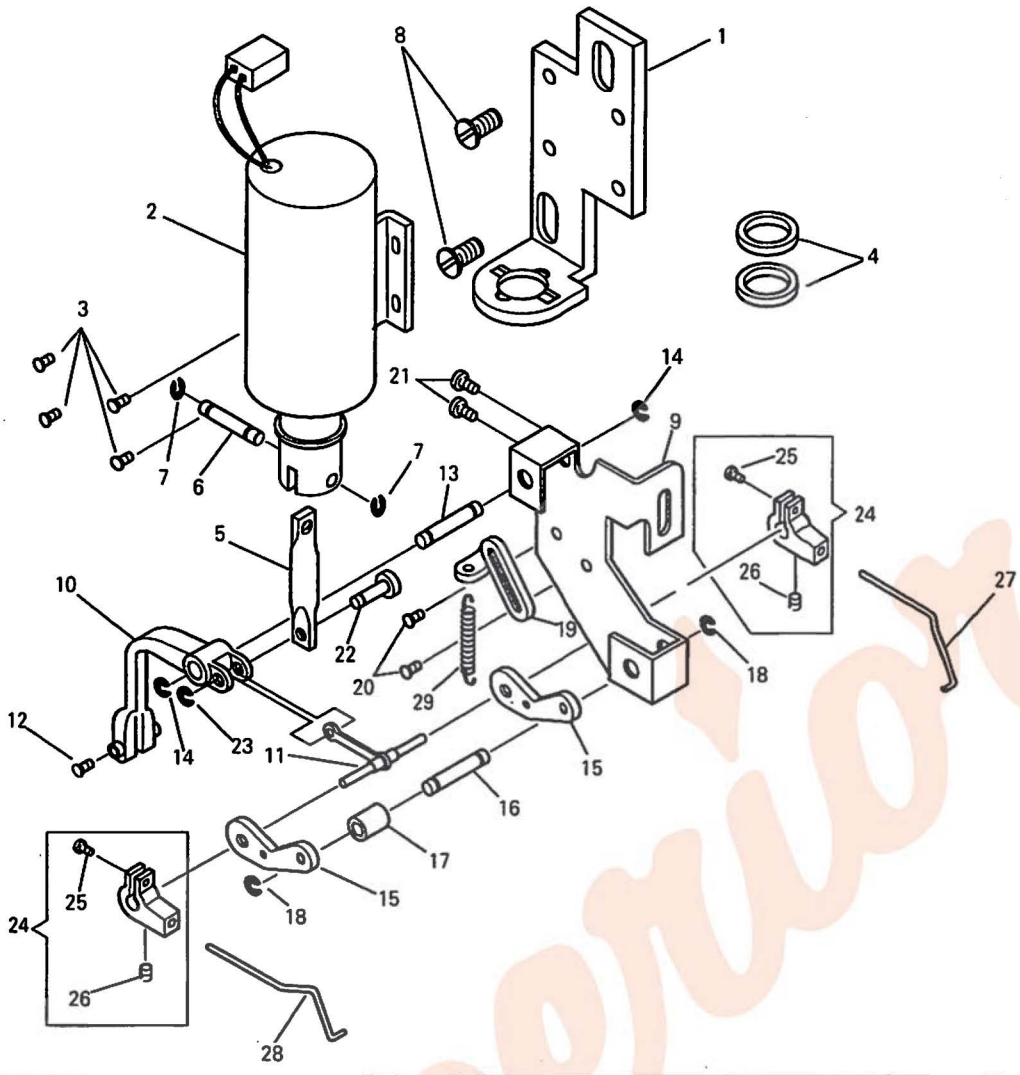

NO.	PART NO.	141A	141B	141G	541A	541B	541G	QTY	DESCRIPTION
1	552620	—	*	*	—	*	*	1	WIPER SOLENOID BRACKET
2	369336	—	*	*	—	*	*	1	WIPER SOLENOID COMPLETE
3	544211-001	—	*	*	—	*	*	4	WIPER SOLENOID SCREW
4	552621	—	*	*	—	*	*	2	WIPER SOLENOID RUBBER CUSHION
5	552622	—	*	*	—	*	*	1	WIPER SOLENOID LINK
6	552623	—	*	*	—	*	*	1	WIPER SOLENOID PIN
7	543801-002	—	*	*	—	*	*	2	WIPER SOLENOID PIN RETAINING RING
8	414508	—	*	*	—	*	*	2	WIPER SOLENOID BRACKET SCREW
9	552625	—	*	*	—	*	*	1	WIPER BRACKET
10	552627	—	*	*	—	*	*	1	WIPER ARM
11	552628	—	*	*	—	*	*	1	WIPER ARM LINK COMP.
12	552631	—	*	*	—	*	*	1	WIPER ARM LINK HING PIN
13	552632	—	*	*	—	*	*	1	WIPER ARM STUD
14	543801-006	—	*	*	—	*	*	2	WIPER ARM STUD RETAINING RING
15	552633	—	*	*	—	*	*	2	WIPER LEVER
16	552632	—	*	*	—	*	*	1	WIPER LEVER STUD
17	552635	—	*	*	—	*	*	1	WIPER LEVER STUD COLLAR
18	543801-006	—	*	*	—	*	*	2	WIPER LEVER STUD RETAINING RING
19	552637	—	*	*	—	*	*	1	WIPER LEVER RETURN SPRING BRACKET
20	544212-051	—	*	*	—	*	*	2	WIPER LEVER RETURN SPRING BRACKET SCREW
21	414508	—	*	*	—	*	*	2	WIPER BRACKET SCREW
22	552638	—	*	*	—	*	*	1	WIPER SOLENOID LINK PIN
23	543860-003	—	*	*	—	*	*	1	WIPER SOLENOID LINK PIN RETAINING RING
24	552639	—	*	*	—	*	*	2	WIPER HOLDER COMPLETE
25	414749-001	—	*	*	—	*	*	2	WIPER HOLDER SCREW
26	544206-011	—	*	*	—	*	*	2	WIIPER SET SCREW
27	552811	—	*	*	—	*	*	1	WIPER (RIGHT)
28	552641	—	*	*	—	*	*	1	WIPER (LEFT)
29	544665	—	*	*	—	*	*	1	WIPER LEVER RETURN SPRING

NO.	PART NO.	141A	141B	141G	541A	541B	541G	QTY	DESCRIPTION

GAUGE PARTS

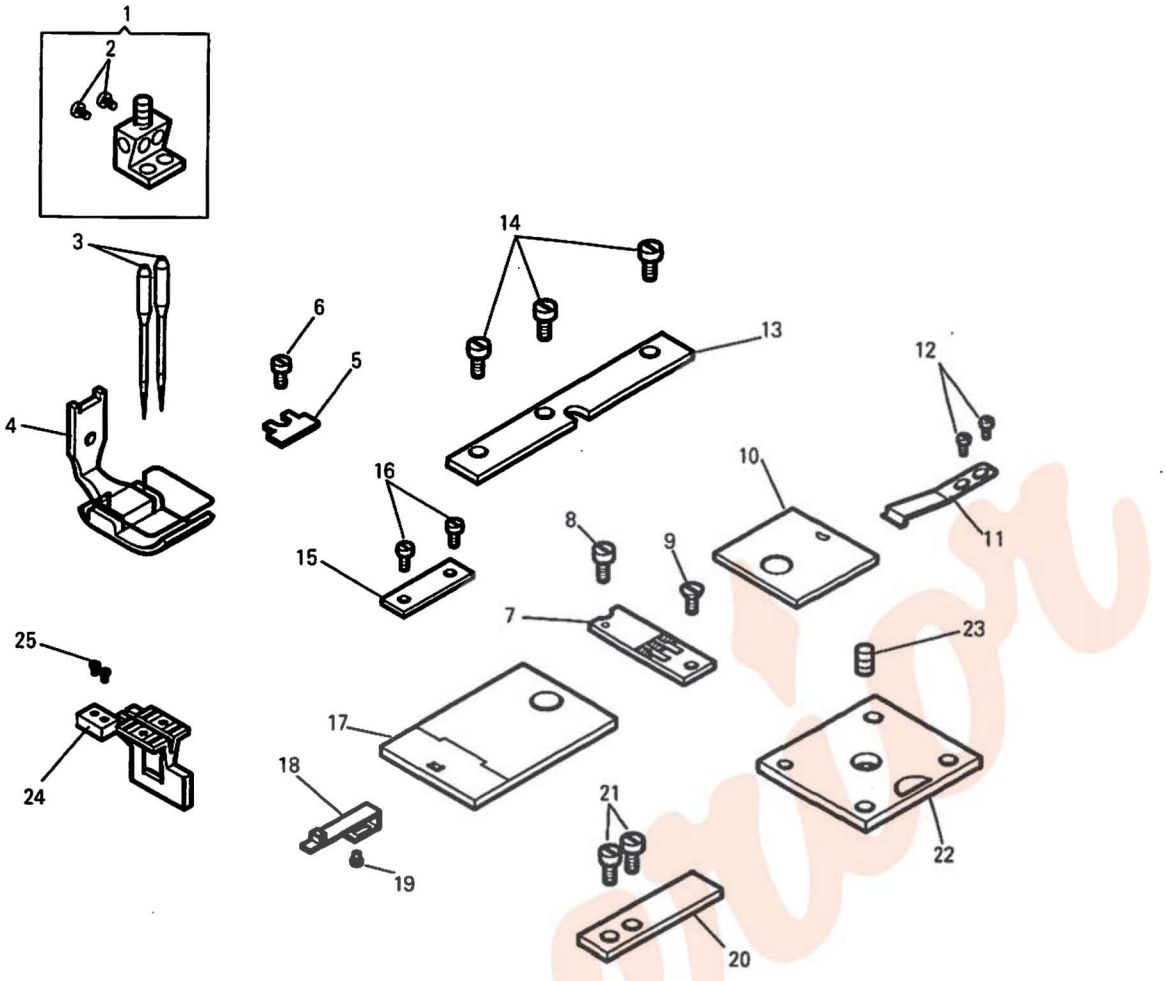

NO.	PART NO.	141A	141B	141G	541A	541B	541G	QTY	DESCRIPTION
1	412040-008	*	*	*	*	*	*	1	NEEDLE HOLDER COMP.(1/ 8" , 3.2mm)
1	412040-012	*	*	*	*	*	*	1	NEEDLE HOLDER COMP.(3/16", 4.8mm) (STANDARD)
1	412040-016	*	*	*	*	*	*	1	NEEDLE HOLDER COMP.(1/ 4", 6.4mm) (STANDARD)
1	412040-020	*	*	*	*	*	*	1	NEEDLE HOLDER COMP.(5/16", 7.9mm)
1	412040-024	*	*	*	*	*	*	1	NEEDLE HOLDER COMP.(3/ 8", 9.5mm)
1	412040-100	*	*	*	*	*	*	1	NEEDLE HOLDER COMP.(1" , 25.4mm)
2	374456	*	*	*	*	*	*	2	NEEDLE SET SCREW
3	N19550-114	*	*	*	—	—	—	2	NEEDLE (CAT. NO. 1955-01 #14)
3	N19550-121	—	—	—	*	*	*	2	NEEDLE (CAT. NO. 1955-01 #21)
4	554670-008	*	*	*	*	*	*	1	PRESSER FOOT COMP.(1/ 8" ,3.2mm)
4	554670-012	*	*	*	*	*	*	1	PRESSER FOOT COMP.(3/16" ,4.8mm) (STANDARD)
4	554670-016	*	*	*	*	*	*	1	PRESSER FOOT COMP.(1/ 4" ,6.4mm) (STANDARD)
4	554670-020	*	*	*	*	*	*	1	PRESSER FOOT COMP.(5/16" ,7.9mm)
4	554670-024	*	*	*	*	*	*	1	PRESSER FOOT COMP.(3/ 8" ,9.5mm)
4	554670-100	*	*	*	*	*	*	1	PRESSER FOOT COMP.(1" ,25.4mm)
5	416604	—	*	*	—	*	*	1	THREAD GAURD (1/8",3/16",1/4",5/16",3/8",1")
6	544450	—	*	*	—	*	*	1	THREAD GUARD SCREW
7	412039-008	*	—	—	*	—	—	1	THROAT PLATE (1/ 8" ,3.2mm)
7	412039-012	*	—	—	*	—	—	1	THROAT PLATE (3/16" ,4.8mm) (STANDARD)
7	412039-016	*	—	—	*	—	—	1	THROAT PLATE (1/ 4" ,6.4mm) (STANDARD)
7	412039-020	*	—	—	*	—	—	1	THROAT PLATE (5/16" ,7.9mm)
7	412039-024	*	—	—	*	—	—	1	THROAT PLATE (3/ 8" ,9.5mm)
7	412039-100	*	—	—	*	—	—	1	THROAT PLATE (1" ,25.4mm)
7	281068-008	—	*	*	—	*	*	1	THROAT PLATE (1/ 8" ,3.2mm)
7	281068-012	—	*	*	—	*	*	1	THROAT PLATE (3/16" ,4.8mm) (STANDARD)
7	281068-016	—	*	*	—	*	*	1	THROAT PLATE (1/ 4" ,6.4mm) (STANDARD)
7	281068-020	—	*	*	—	*	*	1	THROAT PLATE (5/16" ,7.9mm)
7	281068-024	—	*	*	—	*	*	1	THROAT PLATE (3/ 8" ,9.5mm)
7	281068-100	—	*	*	—	*	*	1	THROAT PLATE (1" ,25.4mm)

NO.	PART NO.	141A	141B	141G	541A	541B	541G	QTY	DESCRIPTION
8	544382-452	*	*	*	*	*	*	1	THROAT PLATE CLAMP SCREW
9	691-845	*	*	*	*	*	*	1	THROAT PLATE SCREW
10	552814	*	*	*	*	*	*	1	BED SLIDE (RIGHT) (1/8",3/16",1/4",5/16",3/8")
10	552816	*	*	*	*	*	*	1	BED SLIDE (RIGHT) (1")
11	552419	*	*	*	*	*	*	1	BED SLIDE (RIGHT) SPRING PLATE
12	544269	*	*	*	*	*	*	2	BED SLIDE (RIGHT) SPRING PLATE SCREW
13	554453	—	*	*	—	*	*	1	BED COVER PLATE (RIGHT)
14	545137	—	*	*	—	*	*	3	BED COVER PLATE (RIGHT) SCREW
15	554651	*	—	—	*	—	—	1	BED COVER PLATE
16	414659	*	—	—	*	—	—	2	BED COVER PLATE SCREW
17	554615	*	*	*	*	*	*	1	BED SLIDE (LEFT) (1/8",3/16",1/4",5/16",3/8",1")
18	554666	*	*	*	*	*	*	1	BED SLIDE (LEFT) SPRING PLATE
19	544419	*	*	*	*	*	*	1	BED SLIDE (LEFT) SPRING PLATE SCREW
20	281069	—	*	*	—	*	*	1	BED COVER PLATE (LEFT)
21	545137	—	*	*	—	*	*	2	BED COVER PLATE (LEFT) SCREW
22	416756-452	*	—	—	*	—	—	1	ATTACHMENT SLIDE PLATE
22	281072	—	*	*	—	*	*	1	ATTACHMENT SLIDE PLATE
23	544389	*	*	*	*	*	*	1	ATTACHMENT SLIDE PLATE LOCK SCREW
24	412266-008	*	—	—	*	—	—	1	FEED DOG (1/ 8" ,3.2mm)
24	412253-012	*	—	—	*	—	—	1	FEED DOG (3/16" ,4.8mm)(STANDARD)
24	412254-016	*	—	—	*	—	—	1	FEED DOG (1/ 4" ,6.4mm)(STANDARD)
24	412254-020	*	—	—	*	—	—	1	FEED DOG (5/16" ,7.9mm)
24	412254-024	*	—	—	*	—	—	1	FEED DOG (3/ 8" ,9.5mm)
24	412255-100	*	—	—	*	—	—	1	FEED DOG (1" ,25.4mm)
24	281191-008	—	*	*	—	*	*	1	FEED DOG (1/ 8" ,3.2mm)
24	281192-012	—	*	*	—	*	*	1	FEED DOG (3/16" ,4.8mm)(STANDARD)
24	281193-016	—	*	*	—	*	*	1	FEED DOG (1/ 4" ,6.4mm)(STANDARD)
24	281193-020	—	*	*	—	*	*	1	FEED DOG (5/16" ,7.9mm)
24	281193-024	—	*	*	—	*	*	1	FEED DOG (3/ 8" ,9.5mm)
24	281195-100	—	*	*	—	*	*	1	FEED DOG (1" ,25.4mm)
25	544399	*	*	*	*	*	*	2	FEED DOG SCREW

ACCESSORIES AND ATTACHMENTS 1

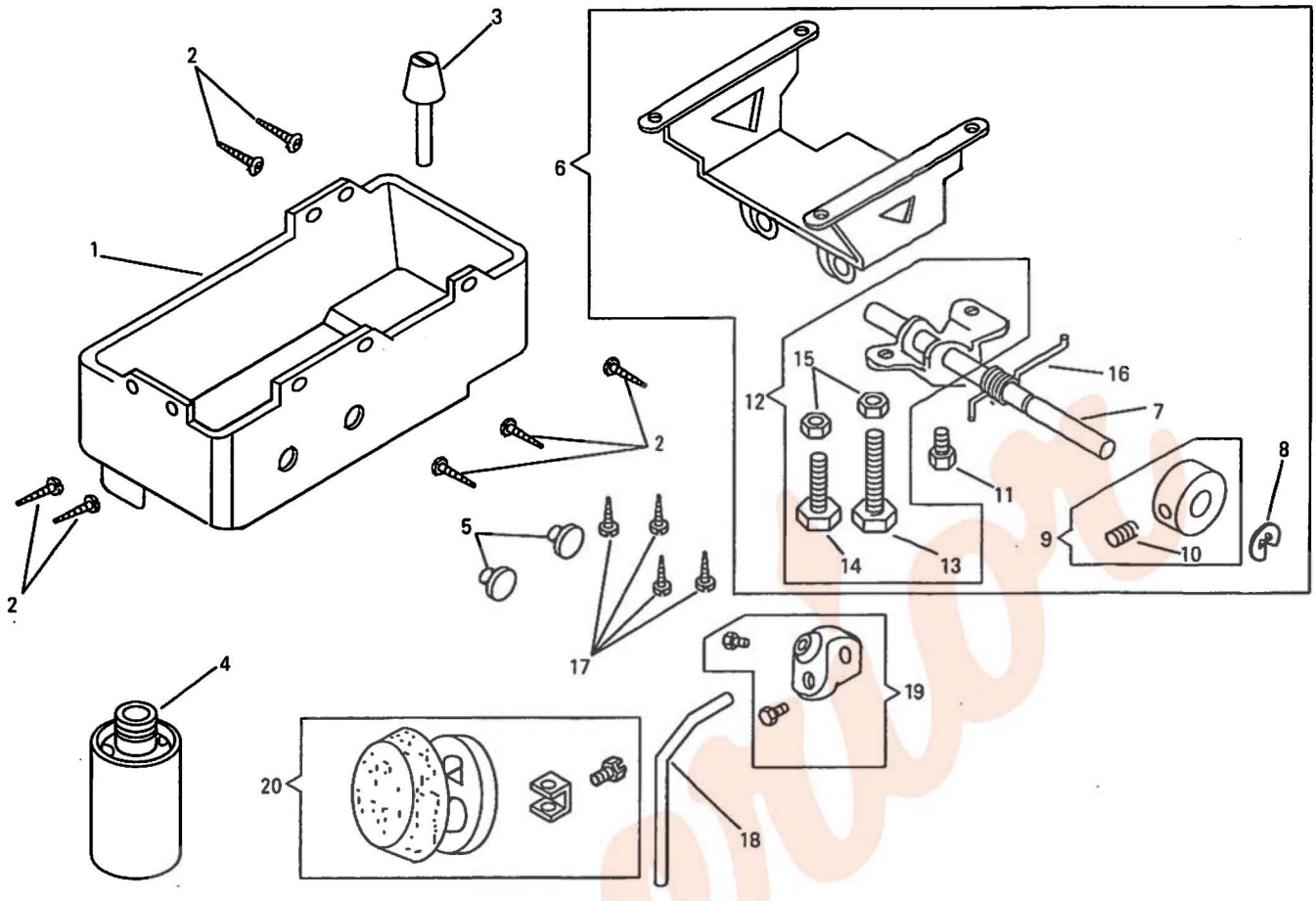

NO.	PART NO.	141A	141B	141G	541A	541B	541G	QTY	DESCRIPTION
1	552647	*	*	*	*	*	*	1	DRIP PAN
2	350708	*	*	*	*	*	*	7	DRIP PAN NAIL
3	552648	*	*	*	*	*	*	1	KNEE LIFTER PLUNGER COMP.
4	167448	*	*	*	*	*	*	1	DRIP PAN DRAIN JAR
5	544886-451	*	*	*	*	*	*	2	DRIP PAN RUBBER PLUG
6	552875	*	*	*	*	*	*	1	KNEE LIFTER ROCK SHAFT BRACKET COMP.
7	552644	*	*	*	*	*	*	1	KNEE LIFTER ROCK SHAFT
8	543801-011	*	*	*	*	*	*	1	KNEE LIFTER ROCK SHAFT RETAINING RING
9	540633	*	*	*	*	*	*	1	KNEE LIFTER ROCK SHAFT COLLAR
10	504134	*	*	*	*	*	*	1	KNEE LIFTER ROCK SHAFT COLLAR SET SCREW
11	544499-003	*	*	*	*	*	*	1	KNEE LIFTER ROCK SHAFT LIFTING ARM SCREW
12	552645	*	*	*	*	*	*	1	KNEE LIFTER ROCK SHAFT LIFTING ARM COMP.
13	544499-008	*	*	*	*	*	*	1	KNEE LIFTER ROCK SHAFT LIFTING ARM STOP SCREW (LONG)
14	544499-006	*	*	*	*	*	*	1	KNEE LIFTER ROCK SHAFT LIFTING ARM STOP SCREW (SMALL)
15	541167-001	*	*	*	*	*	*	2	KNEE LIFTER ROCK SHAFT LIFTING ARM STOP SCREW NUT
16	552646	*	*	*	*	*	*	1	KNEE LIFTER ROCK SHAFT LIFTING ARM SPRING
17	549296	*	*	*	*	*	*	4	KNEE LIFTER ROCK SHAFT BRACKET SCREW
18	544895	*	*	*	*	*	*	1	KNEE LIFTER ROCK SHAFT
19	545918	*	*	*	*	*	*	1	KNEE LIFTER ROCK SHAFT HUB COMP.
20	414115	*	*	*	*	*	*	1	KNEE LIFTER KNEE PLATE COMP.

NO.	PART NO.	141A	141B	141G	541A	541B	541G	QTY	DESCRIPTION

ACCESSORIES AND ATTACHMENTS 2

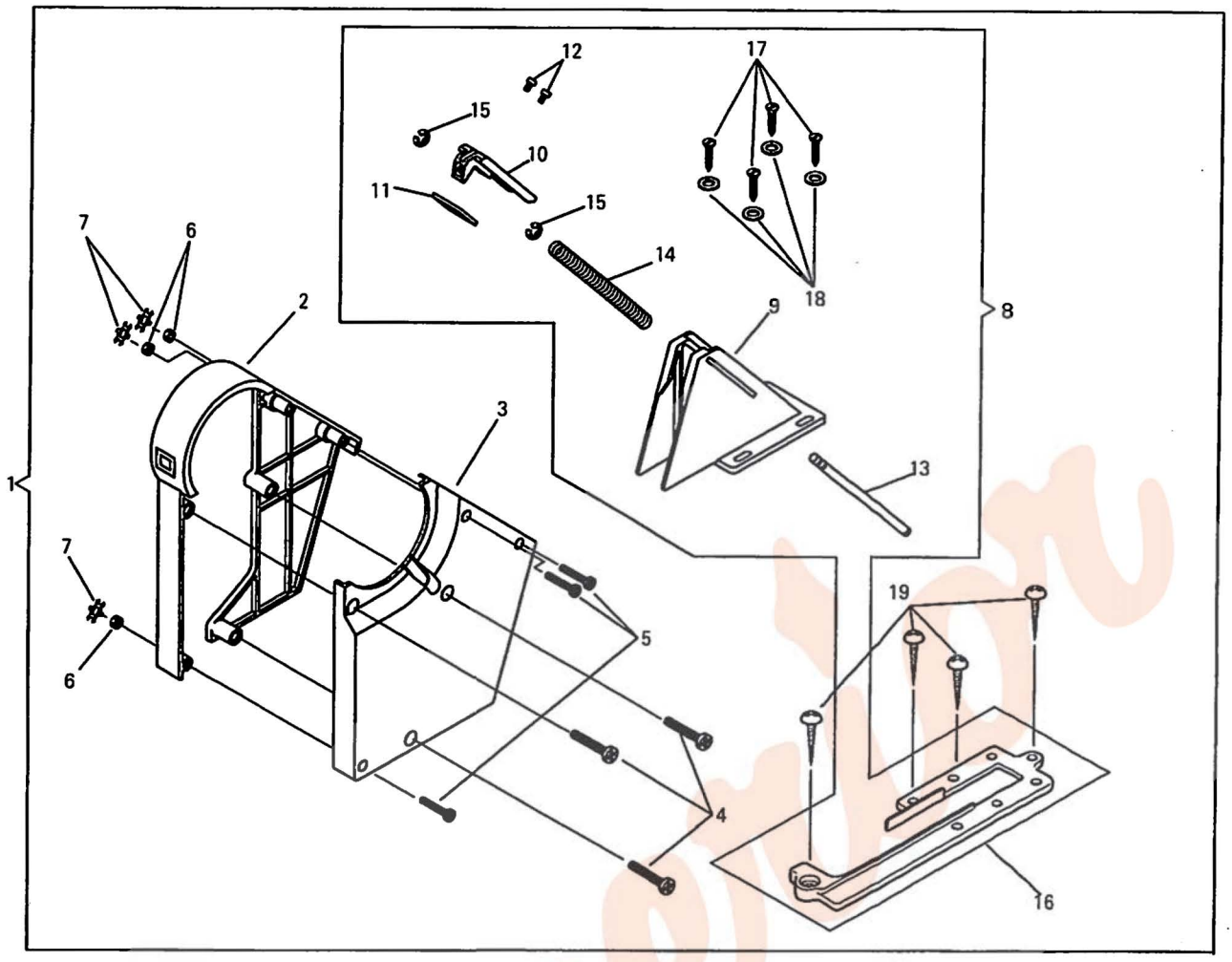

NO.	PART NO.	141A	141B	141G	541A	541B	541G	QTY	DESCRIPTION
1	552643-383	*	*	*	*	*	*	1	BELT GUARD COMP.
2	550163-451	*	*	*	*	*	*	1	BELT GUARD (LEFT)
3	550164-451	*	*	*	*	*	*	1	BELT GUARD (RIGHT)
4	544213-058	*	*	*	*	*	*	3	BELT GUARD SCREW
5	544212-007	*	*	*	*	*	*	3	BELT GUARD SCREW
6	541165-001	*	*	*	*	*	*	3	BELT GUARD SCREW NUT
7	543880-004	*	*	*	*	*	*	3	BELT GUARD SCREW NUT RING
8	552822-383	*	*	*	*	*	*	1	BELT GUARD (LOWER) COMP.
9	550166-451	*	*	*	*	*	*	1	BELT GUARD (LOWER)
10	552820-383	*	*	*	*	*	*	1	BELT GUARD SLIDE
11	552821	*	*	*	*	*	*	1	BELT GUARD SLIDE PLATE
12	544211-053	*	*	*	*	*	*	2	BELT GUARD SLIDE SCREW
13	550169	*	*	*	*	*	*	1	BELT GUARD SLIDE SHAFT
14	368279	*	*	*	*	*	*	1	BELT GUARD SLIDE SPRING
15	408913	*	*	*	*	*	*	2	BELT GUARD SLIDE SHAFT SNAP RING
16	552819-383	*	*	*	*	*	*	1	BELT GUARD (LOWER) SPACER
17	412697-002	*	*	*	*	*	*	4	BELT GUARD (LOWER) WOOD SCREW
18	543804-003	*	*	*	*	*	*	4	BELT GUARD (LOWER) WOOD SCREW WASHER
19	549398	*	*	*	*	*	*	4	BELT GUARD (LOWER) SPACER WOOD SCREW

NO.	PART NO.	141A	141B	141G	541A	541B	541G	QTY	DESCRIPTION

ACCESSORIES AND ATTACHMENTS 3

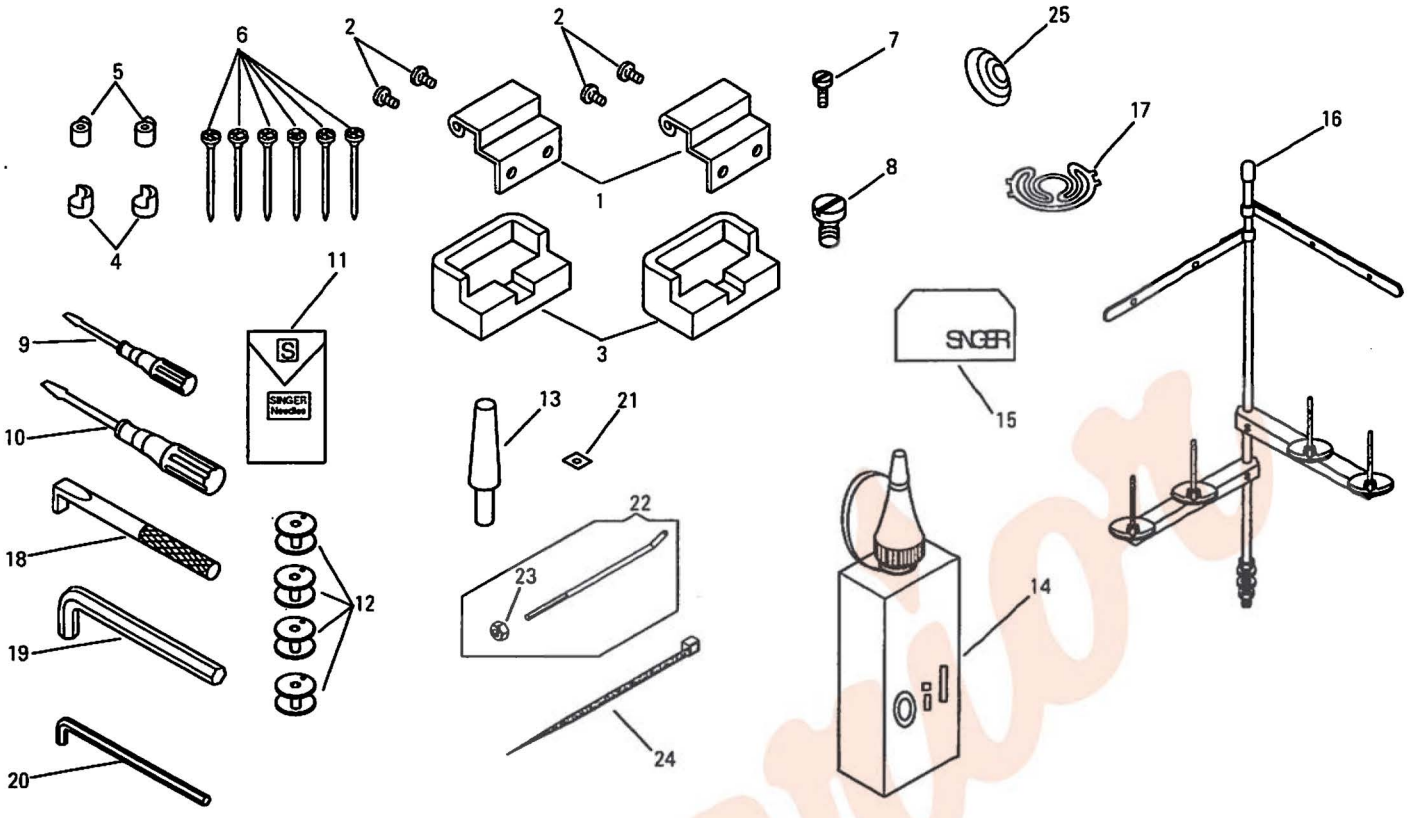

NO.	PART NO.	141A	141B	141G	541A	541B	541G	QTY	DESCRIPTION
1	412212	*	*	*	*	*	*	2	MACHINE HINGE CONNECTION
2	544381	*	*	*	*	*	*	4	MACHINE HINGE CONNECTION SCREW
3	540523	*	*	*	*	*	*	2	MACHINE HINGE CONNECTION CUSHION
4	410570	*	*	*	*	*	*	2	MACHINE REST (FRONT)
5	410571	*	*	*	*	*	*	2	MACHINE REST (BACK)
6	546920-002	*	*	*	*	*	*	6	NAIL
7	545295	*	*	*	*	*	*	1	ATTACHMENT SCREW (SMALL)
8	544388	*	*	*	*	*	*	1	ATTACHMENT SCREW (LARGE)
9	541514	*	*	*	*	*	*	1	SCREW DRIVER (SMALL)
10	548701	*	*	*	*	*	*	1	SCREW DRIVER (LONG)
11	N19550-114	*	*	*	—	—	—	5	NEEDLE (CAT.NO.1955-01 #14
11	N19550-121	—	—	—	*	*	*	5	NEEDLE (CAT.NO.1955-01 #21)
12	282762	*	*	*	—	—	—	4	BOBBIN
12	282763	—	—	—	*	—	—	4	BOBBIN
12	282764	—	—	—	—	*	*	4	BOBBIN
13	411313	*	*	*	*	*	*	1	MACHINE REST PIN
14	412181	*	*	*	*	*	*	1	OILER (250CC, C-TYPE)
15	414407	*	*	*	*	*	*	1	MACHINE COVER
16	554471-453	*	*	*	*	*	*	1	THREAD UNWINDER COMP.
17	417195	—	*	*	—	—	—	2	ANTI SPILL SPRING
17	417269	—	—	—	—	*	*	2	ANTI SPILL SPRING
18	368444	—	*	*	—	*	*	1	SCREW DRIVER
19	543066-001	*	*	*	*	*	*	1	WRENCH (FOR M4)
20	418441-001	—	*	*	—	*	*	1	WRENCH (FOR M3)
21	548228	—	*	*	—	*	*	2	TRAPPER ADJUSTING WASHER
22	281199	—	*	*	—	*	*	1	SENSOR RETAINER COMP.
23	541196	—	*	*	—	*	*	1	SENSOR RETAINER LOCK NUT
24	540899	—	*	*	—	*	*	1	CORD RETAINER
25	554741	*	*	*	*	*	*	2	TENSION SPRING

NO.	PART NO.	141A	141B	141G	541A	541B	541G	QTY	DESCRIPTION

PARTS AVAILABLE AT EXTRA CHARGE

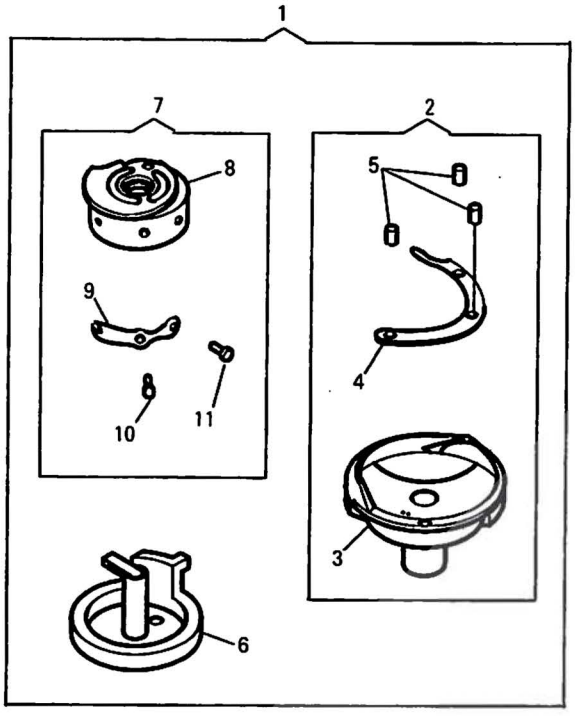

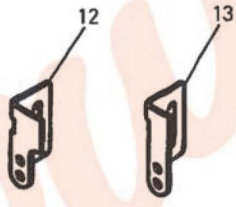

NO.	PART NO.	141A	141B	141G	541A	541B	541G	QTY	DESCRIPTION
1	554605	*	*	*	—	—	—	1	HOOK AND BOBBIN CASE COMP.
1	554610	—	—	—	*	*	*	1	HOOK AND BOBBIN CASE COMP.
2	554606	*	*	*	—	—	—	1	HOOK COMP.
2	554611	—	—	—	*	*	*	1	HOOK COMP.
3	554607	*	*	*	—	—	—	1	HOOK (BODY)
3	554612	—	—	—	*	*	*	1	HOOK (BODY)
4	281135	*	*	*	—	—	—	1	HOOK GIB
4	412311	—	—	—	*	*	*	1	HOOK GIB
5	201253	*	*	*	—	—	—	2	HOOK GIB SCREW
5	500520	—	—	—	*	*	*	3	HOOK GIB SCREW
6	281138	*	*	*	—	—	—	1	BOBBIN CASE COMP.
6	281148	—	—	—	*	*	*	1	BOBBIN CASE COMP.
7	552878	*	*	*	—	—	—	1	BOBBIN CASE CAP COMP.
7	554613	—	—	—	*	*	*	1	BOBBIN CASE CAP COMP.
8	552879	*	*	*	—	—	—	1	BOBBIN CASE CAP
8	554614	—	—	—	*	*	*	1	BOBBIN CASE CAP
9	281143	*	*	*	—	—	—	1	BOBBIN CASE CAP TENSION SPRING
9	281149	—	—	—	*	*	*	1	BOBBIN CASE CAP TENSION SPRING
10	200984	*	*	*	—	—	—	1	BOBBIN CASE CAP TENSION SPRING REGULATING SCREW
10	500519	—	—	—	*	*	*	1	BOBBIN CASE CAP TENSION SPRING REGULATING SCREW
11	200594	*	*	*	—	—	—	1	BOBBIN CASE TENSION SPRING SCREW
11	500518	—	—	—	*	*	*	1	BOBBIN CASE TENSION SPRING SCREW
12	554681	*	*	*	—	—	—	1	ARM THREAD GUIDE
13	554082	—	—	—	*	*	*	1	ARM THREAD GUIDE

NO.	PART NO.	141A	141B	141G	541A	541B	541G	QTY	DESCRIPTION

Superior