Form 2152w-Rev.
(750)
Printed in U. S. A.

LIST
OF
PARTS

SINGER** SEWING MACHINES

MACHINES
Nos. 47w61 and 47w66

** A TRADE MARK OF
THE SINGER MANUFACTURING COMPANY

From the library of: Superior Sewing Machine & Supply LLC

INSTRUCTIONS FOR OILING

To ensure easy running and prevent unnecessary wear of the parts which are in movable contact, the machine requires oiling and when in continuous use, "TYPE B" or "TYPE D" OIL, sold only by Singer Sewing Machine Company, should be applied at least twice each day to all oil holes marked "OIL", as instructed in Form 2220w.

"TYPE D" OIL is stainless.

Use "TYPE E" Stainless Thread Lubricant in the thread lubricator attached to the face plate of the Machine.

Copyright, U. S. A., 1939, 1940 and 1950
by The Singer Manufacturing Co.
All Rights Reserved for all Countries

From the library of: Superior Sewing Machine & Supply LLC

INDEX

	PAGE
ACCESSORIES	20
BINDERS	22
BOBBIN WINDER	20
FEED DOGS	23
FOOT LIFTER	21
MACHINE No. 47w61	5
MACHINE No. 47w66	13
NUMERICAL LIST OF PARTS	27
PRESSER FEET	24
THROAT PLATES	26

From the library of: Superior Sewing Machine & Supply LLC

INSTRUCTIONS FOR ORDERING

In ordering from this list, use ONLY the PART number in the FIRST column.

The number stamped on a Sewing Machine Part is the number of the Single Part only, except when the part includes Set Screws, Clamping Screws, Studs and Rollers Spun on, Small Wires riveted, or Parts soldered together, etc., which it is necessary to furnish in combination.

Every combination of parts sent out has its specific number which, although not stamped on Parts (except in above case), must be used when ordering the combination.

Each number always indicates the SAME PART in whatever list it appears, or for whatever Machine.

The letters after some of the numbers indicate the style of finish only, as follows:

A. Hardened, Polished, Nickel Plated and Buffed.
B. Polished, Nickel Plated and Buffed.
C. Hardened only.
D. Polished only.
E. Soft, not polished.
F. Hardened and Polished.
H. Blued.
J. Nickel Plated only.
R. Merlized.
X. Black Oxide, for Iron and Steel.
XC. Hardened and Black Oxide, for Iron or Steel.
Y. Black Nickel Plated only.

These letters MUST BE USED when they appear in the list and AFTER the number, as in the list.

In this series
1 to 1500, 200001 to 201500 and 350001 to 351500 are Screw Numbers.
1501 to 1800, 201501 to 201800 and 351501 to 351800 are Nut Numbers.
1801 to 2000, 201801 to 202000 and 351801 to 352000 are Roller Numbers.
2001 to 50000 and 202001 to 350000 are Numbers of Machine Parts.

The figures in the second column refer only to the plate in which the illustration of the part is shown and are NOT TO BE USED in ordering.

Two or more numbers over a cut indicate that the difference between such parts is not visible in an illustration.

Parts marked with an asterisk (*) are furnished only when repairs are made at the factory.

From the library of: Superior Sewing Machine & Supply LLC

LIST OF PARTS COMPLETE

FOR

MACHINE No. 47w61

HIGH SPEED. DROP FEED. ROLLER PRESSER.

CYLINDER BED. MECHANICAL OPENER.

MAXIMUM STITCH 8 TO THE INCH.

FOR LEATHER AND GLOVES.

No.	Plate	Name
*233757	-----	Arm with 202135
203091	17030	" Cap
200278H	17030	" " Screw
202248	17030	" " " Washer
203089	17030	" " Spool Holder Base
203090	17030	" " " " " 203089 with 200079H and 204296

From the library of: Superior Sewing Machine & Supply LLC

No.	Plate	Name
200585H	17030	Arm Cap Spool Holder Base Screw
204296	17030	" " " " Wire
200079H	17030	" " " " " Hinge Screw
203092	17030	Arm Cap and Spool Holder complete,Nos. 203090,203091 and two 200585H
204235	17002	Arm Position Pin (2)
200010E	17002	" Screw (3)
202005	17002	" " Washer (3)
233691	17030	" Shaft with 224392 and 350431E
240802	17030	" " Bushing (back) with 202244
202244	17030	" " " " Oil Packing (wick)
200338C	17030	Arm Shaft Bushing (back) Set Screw
207080	17030	" " " (front) with 202244
202244	17030	" " " " Oil Packing (wick)
200502H	17030	Arm Shaft Bushing (front) Oil Packing Thumb Screw
200338C	17030	Arm Shaft Bushing (front) Set Screw
235003	17002	" " Connection Belt
224200	17002	" " " " Pulley with 200327C,200602C and two 202253
200602C	17002	Arm Shaft Connection Belt Pulley Position Screw
200327C	17002	Arm Shaft Connection Belt Pulley Set Screw
202253	17002	Arm Shaft Connection Belt Pulley Spring Flange
233692	17003	Arm Shaft Connection Belt Timing Plate
200164B	17003	Arm Shaft Connection Belt Timing Plate Screw (2)
224392	17030	Arm Shaft Oil Packing (wick)
350431E	17030	" " " " Stop Screw
241561	17030	Balance Wheel (disc) (belt groove 2-3/4 in. diam.) with 200328C and 200335C
200328C	17030	Balance Wheel Position Screw
200335C	17030	" " " Set Screw
*233693	-----	Bed (cylinder) with 201461C and 213380
233607	17053	" " Cap
222404	17053	" " " Position Pin (2)
200100D	17053	" " " Screw (2)
213787	17053	" " End Cover
213890	17053	" Base (4 in. high)
203184	17053	" Clamp
200262H	17053	" " Hinge Screw
202622	17053	" " Packing Washer
200728B	17053	" " Thumb Screw
203185	17053	" " Washer
202618	17053	" Hinge
200030H	17053	" " Screw (6)
221174	17053	" Slide (back)
233643	17053	" " Clamp Plate (back)
233609	17053	" " " " (front)
200580H	17053	" " " " Screw (4)
203470	17052	Bobbin

From the library of: Superior Sewing Machine & Supply LLC

No.	Plate	Name
*233764	-----	Bobbin Case
203648	17052	" " Latch
*202056	-----	" " " Pin
203473	17052	" " " Plunger
203474	17052	" " " Spring
233636	17052	" " Lever
*233640	-----	" " " Eccentric
221147	17052	" " " " Position Pin
203576	17052	" " " Fulcrum with 203579
200110D	17052	" " " " Screw
203578	17052	" " " Slide
203579	17052	" " " " Stud
241674	17052	" " Oiling Felt
241675	17052	" " " " Retainer
350405C	17052	" " " " " Screw
203214	17052	" " Tension Spring
200984C	17052	" " " " Regulating Screw
200594C	17052	Bobbin Case Tension Spring Screw
203216	17052	" " Washer (cloth)
233765	17052	Bobbin Case complete,Nos.200594C, 200984C,202056,203214,203216,203473, 203474,203648,233764,241674,241675 and two 350405C
241753	17053	Face Plate with 201650H and 350432XC
202135	17053	" " Position Pin
200462H	17053	" " Thumb Screw
233694	17051	Feed Bar with 213610
213298	17051	" " Connecting Link with two 350411C
350411C	17051	Feed Bar Connecting Link Pinch Screw
200935F	17051	" " " " Screw Stud
201531E	17051	" " " " " " Nut
213610	17051	Feed Bar Connecting Link Stud
211943	17051	" Dog,for 223801
350149E	17051	" " Screw,for use with Platform Throat Plates
221163	17051	Feed Dog Stop Washer,for use with Platform Throat Plates
235082	17002	Feed Driving Eccentric Regulating Bracket
233612	17002	Feed Driving Eccentric Regulating Bracket 235082 with 224200,two each 201408C and 201525E
201408C	17002	Feed Driving Eccentric Regulating Bracket Hinge Screw
201525E	17002	Feed Driving Eccentric Regulating Bracket Hinge Screw Nut
202301	17002	Feed Driving Eccentric Regulating Bracket Plunger
202595	17002	Feed Driving Eccentric Regulating Bracket Plunger Spring
200607C	17002	Feed Driving Eccentric Regulating Bracket Plunger Spring Stop Screw
201408C	17002	Feed Driving Eccentric Regulating Bracket Stop Screw

From the library of: Superior Sewing Machine & Supply LLC

No.	Plate	Name
201525E	17002	Feed Driving Eccentric Regulating Bracket Stop Screw Nut
200429F	17002	Feed Driving Eccentric Regulating Screw
200383C	17002	Feed Driving Eccentric Regulating Screw Check Screw
235011	17051	Feed Driving Rock Shaft
233614	17051	" " " " Bearing
201525E	17051	" " " " " Nut
235066	17051	" " " " Bushing
200346C	17051	" " " " " Set Screw
203244	17051	Feed Driving Rock Shaft Collar with two 200393C
200393C	17051	Feed Driving Rock Shaft Collar Set Screw
235842	17002	Feed Driving Rock Shaft Connection with 200054E and 202277
200919C	17002	Feed Driving Rock Shaft Connection Hinge Screw
201522E	17002	Feed Driving Rock Shaft Connection Hinge Screw Nut
202277	17002	Feed Driving Rock Shaft Connection Oil Packing (wick)
200054E	17002	Feed Driving Rock Shaft Connection Pinch Screw
210559	17030	Feed Driving Rock Shaft Connection Stop Collar with two 200378C
200378C	17030	Feed Driving Rock Shaft Connection Stop Collar Set Screw
221164	17051	Feed Driving Rock Shaft Crank with 200038C
200038C	17051	Feed Driving Rock Shaft Crank Pinch Screw
233695	17051	Feed Lifting Cam with 200392C and 200447C
200447C	17051	Feed Lifting Cam Position Screw
233696	17051	" " " Retainer
200583H	17051	" " " " Screw
200392C	17051	" " " Set Screw
233615	17030	" Regulating Spindle with 202311, 202443 and 202619
*202311	-----	Feed Regulating Spindle Head
202443	17030	" " " " Pin
202619	17030	" " " " Position Pin
203061	17053	Foot Lifter Lifting Lever
200262H	17053	" " " " Hinge Screw
233390	17053	" " " " " Screw Washer
233361	17053	Foot Lifter Lifting Lever Position Spring
200273D	17053	Foot Lifter Lifting Lever Position Spring Screw
*203482	-----	Hook (sewing)
237726	17052	" 203482 with 201253F,201376C and 221148

From the library of: Superior Sewing Machine & Supply LLC

No.	Plate	Name
233767	17052	Hook and Bobbin Case complete,Nos. 233765 and 237726
233697	17052	Hook Bevel Gear Socket,18 teeth
200556H	17052	" " " " Screw
233698	17003	" " Pinion with two 200386C
200386C	17003	" " " Set Screw
235015	17003	" Driving Counter Shaft
235016	17003	" " " " Bushing (back)
200346C	17003	Hook Driving Counter Shaft Bushing (back) Set Screw
235017	17003	Hook Driving Counter Shaft Bushing (front)
200346C	17003	Hook Driving Counter Shaft Bushing (front) Set Screw
235018	17003	Hook Driving Counter Shaft Gear with 200382C and 200398C
200398C	17003	Hook Driving Counter Shaft Gear Position Screw
200382C	17003	Hook Driving Counter Shaft Gear Set Screw
235019	17051	Hook Driving Counter Shaft Oil Tube (brass)
233699	17003	Hook Driving Shaft
235021	17003	" " " Bushing (back)
200346C	17003	" " " " " Set Screw
213380	17003	Hook Driving Shaft Bushing (front)
201461C	17003	" " " " (front) Position Screw
203244	17003	Hook Driving Shaft Collar (front) with two 200393C
200393C	17003	Hook Driving Shaft Collar (front) Set Screw
235064	17003	Hook Driving Shaft Connection Belt Pulley with 202253 and two 201254C
201254C	17003	Hook Driving Shaft Connection Belt Pulley Set Screw
202253	17003	Hook Driving Shaft Connection Belt Pulley Spring Flange
235018	17003	Hook Driving Shaft Gear with 200382C and 200398C
200398C	17003	Hook Driving Shaft Gear Position Screw
200382C	17003	" " " " Set Screw
221148	17052	" Gib
201376C	17052	" " Hinge Screw
201253F	17052	" " Screw
233707	17052	" Saddle with 206758 and two 233708
206758	17052	" " Oil Packing (wick)
233708	17052	" " Oiling Felt
200541E	17052	" " Screw (2)
225837	17052	" " " Washer (2)
233700	17052	Hook Saddle complete,Nos.200110D, 200556H,203576,203578,233636,233637, 233697,233707 and 233767
233637	17052	Hook Washer with 233640 and three 221147

From the library of: Superior Sewing Machine & Supply LLC

No.	Plate	Name
233625	17007	Needle Bar with 200125F,200175D and 204250
233626	17007	Needle Bar Bushing
200352C	17007	" " " Set Screw
238251	17007	" " Connecting Link
264718	17007	" " " " Oil Guard
200161D	17007	" " " " " Guard Screw
202333	17007	Needle Bar Connecting Link Stud with 202254
202254	17007	Needle Bar Connecting Link Stud Oil Packing (wick)
200383C	17007	Needle Bar Connecting Link Stud Set Screw
200374C	17007	Needle Bar Connecting Link Stud Set Screw
264714	17007	Needle Bar Connecting Stud with 200072C and 202277
202277	17007	Needle Bar Connecting Stud Oil Packing (wick)
200072C	17007	Needle Bar Connecting Stud Pinch Screw
202692	17007	" " Crank with 200335C,200374C, 200383C,200428C and 202333
203172	17007	Needle Bar Crank Friction Washer
200428C	17007	" " " Position Screw
200335C	17007	" " " Set Screw
204250	17007	" " Thread Guide
200175D	17007	" " " " Screw
200125F	17007	" Set Screw
208260	17050	Presser Bar Bushing
200363AL	17050	" " " Set Screw
208313	17050	" " Lifter
200653C	17050	" " " Hinge Screw
244004	17050	" " Lifting Releasing Lever Bracket
200260D	17050	Presser Bar Lifting Releasing Lever Bracket Guide Screw
206608	17050	Presser Bar Lifting Releasing Lever Bracket Spring
202337	17050	Presser Bar Position Guide
202338	17050	" " " " Lever with 200086F
200086F	17050	Presser Bar Position Guide Lever Pinch Screw
200352C	17050	Presser Bar Position Guide Set Screw
202378	17050	Presser Bar Spring
202346	17050	" " " Stop Rod
200492H	17050	" " Thumb Screw (pressure regulating)
200475H	17050	Presser Bar Thumb Screw Thumb Set Screw
244084	17050	Presser Bar Thumb Screw Thumb Set Screw Packing (fibre)
201928	17050	Roller Presser,1-1/4 in. diam.,3/16 in. face (fine) with 1528J,1766C, 50553C and twenty-four 16232

From the library of: Superior Sewing Machine & Supply LLC

No.	Plate	Name
203426	17050	Roller Presser Arm
203427	17050	" " " 203426 with 201928
233807	17050	" " " Bracket
235088	17050	" " " " Position Collar with 200362C
200117F	17050	Roller Presser Arm Bracket Position Collar Position Screw
200362C	17050	Roller Presser Arm Bracket Position Collar Set Screw
202558	17050	Roller Presser Arm Bracket Spring
202559	17050	" " " " Spring Stop
200141F	17050	Roller Presser Arm Bracket Spring Stop Screw
200096D	17050	Roller Presser Arm Screw
16232	17050	" " Ball,3/32 in. diameter
1766C	17050	" " " Cone
202557	17050	" " Bar (hollow)
50553C	17050	" " Hinge Screw
1528J	17050	" " " " Nut
233808	17050	Roller Presser and Bar complete,Nos. 200096D,200117F,202557 to 202559, 203427,233807,235088 and two 200141F
224372	17007	Take-up Lever
202399	17007	" " Driving Stud with 202277
202277	17007	" " " " Oil Packing (wick)
202400	17007	Take-up Lever Hinge Stud with 202423
202423	17007	" " " " Oil Packing (wick)
200374C	17007	Take-up Lever Hinge Stud Set Screw
202401	17050	" " Oiling Felt
200132E	17050	" " " " Screw
244048	17054	Tension Disc (back)
244049	17054	" " (front)
202404	17050	" Release Plunger
244061	17054	" " Washer
202407	17054	" Spring
263106	17054	" " Washer
200625F	17054	" Stud with 204925
200061C	17054	" " Set Screw
204925	17054	" " Washer
201572H	17054	" Thumb Nut
244062	17054	Tension complete,Nos.200625F,201572H, 202407,202410,244048,244049,244061 and 263106
202410	17054	Thread Controller Spring
241443	17054	" " " Stop
200132E	17054	" " " " Screw
202412	17030	" Guide (on top of Arm)
202413	17054	" Guide
202414	17054	" Guide
202417	17054	" Guide
200355H	17054	" " Set Screw
200397H	17054	" " " Screw
241755	17053	" Lubricator Oil Pad (felt)
241756	17053	" " " " Holder

From the library of: Superior Sewing Machine & Supply LLC

No.	Plate	Name
240439	17053	Thread Lubricator Oil Pad Retainer
241758	17053	" " " Reservoir
241759	17053	" " " Wick
350432XC	17053	" " Screw
201650H	17053	" " " Nut
214838	17053	" " " Washer
241760	17053	Thread Lubricator complete,Nos.214838, 240439,241755,241756,241758 and 241759
202091	17054	Thread Retainer Sleeve
202092	17054	" " Spring
204058	17054	" " Stud
200368H	17054	" " " Set Screw
204059	17054	Thread Retainer complete,Nos.202091, 202092 and 204058
233801	17051	Throat Plate,50 needle hole,for needle sizes 14 and 15,for 211943
200577AL	17051	Throat Plate Screw (2)

SINGER Needles should be used
in SINGER Machines.
These Needles and their Containers
are marked with the
Company's Trade Mark "SIMANCO.**" 1

Needles in Containers marked
"FOR SINGER MACHINES"
are NOT **SINGER** made needles. 2

From the library of: Superior Sewing Machine & Supply LLC

LIST OF PARTS COMPLETE

FOR

MACHINE No. 47w66

HIGH SPEED. DROP FEED. ALTERNATING PRESSERS.

CYLINDER BED. MECHANICAL OPENER.

MAXIMUM STITCH 8 TO THE INCH.

FOR LEATHER AND GLOVES.

No.	Plate	Name
*233690	-----	Arm
203091	17030	" Cap
200278H	17030	" " Screw
202248	17030	" " " Washer
203089	17030	" " Spool Holder Base
203090	17030	" " " " " 203089 with 200079H and 204296
200585H	17030	Arm Cap Spool Holder Base Screw
204296	17030	" " " " Wire
200079H	17030	" " " " " Hinge Screw
203092	17030	Arm Cap and Spool Holder complete, Nos.203090,203091 and two 200585H
204235	17002	Arm Position Pin (2)
200010E	17002	" Screw (3)
202005	17002	" " Washer (3)
233691	17030	" Shaft with 224392 and 350431E
240802	17030	" " Bushing (back) with 202244
202244	17030	" " " " Oil Packing (wick)
200338C	17030	Arm Shaft Bushing (back) Set Screw
207080	17030	" " " (front) with 202244
202244	17030	" " " " Oil Packing (wick)
200502H	17030	Arm Shaft Bushing (front) Oil Packing Thumb Screw
200338C	17030	Arm Shaft Bushing (front) Set Screw
235003	17002	" " Connection Belt
224200	17002	" " " " Pulley with 200327C,200602C and two 202253
200602C	17002	Arm Shaft Connection Belt Pulley Position Screw
200327C	17002	Arm Shaft Connection Belt Pulley Set Screw
202253	17002	Arm Shaft Connection Belt Pulley Spring Flange
233692	17003	Arm Shaft Connection Belt Timing Plate

From the library of: Superior Sewing Machine & Supply LLC

No.	Plate	Name
200164B	17003	Arm Shaft Connection Belt Timing Plate Screw (2)
224392	17030	Arm Shaft Oil Packing (wick)
350431E	17030	" " " " Stop Screw
241561	17030	Balance Wheel (disc) (belt groove 2-3/4 in. diam.) with 200328C and 200335C
200328C	17030	Balance Wheel Position Screw
200335C	17030	" " Set Screw
*233693	-----	Bed (cylinder) with 201461C and 213380
233607	17056	Bed (cylinder) Cap
222404	17056	" " " Position Pin (2)
200100D	17056	" " " Screw (2)
213787	17056	" " End Cover
213890	17056	" Base (4 in. high)
203184	17056	" Clamp
200262H	17056	" " Hinge Screw
202622	17056	" " Packing Washer
200728B	17056	" " Thumb Screw
203185	17056	" " Washer
202618	17056	" Hinge
200030H	17056	" " Screw (6)
221174	17056	" Slide (back)
233643	17056	" " Clamp Plate (back)
233609	17056	" " " " (front)
200580H	17056	" " " " Screw (4)
200459D	17056	" " " " (back) Thumb Screw
226071	17056	Bed Slide Clamp Plate (back) Thumb Screw Washer
203470	17052	Bobbin
*233764	-----	" Case
203648	17052	" " Latch
*202056	-----	" " " Pin
203473	17052	" " " Plunger
203474	17052	" " " Spring
233636	17052	" " Lever
*233640	-----	" " " Eccentric
221147	17052	" " " " Position Pin
203576	17052	" " " Fulcrum with 203579
200110D	17052	" " " " Screw
203578	17052	" " " Slide
203579	17052	" " " " Stud
241674	17052	" " Oiling Felt
241675	17052	" " " " Retainer
350405C	17052	" " " " " Screw
203214	17052	" " Tension Spring
200984C	17052	" " " " Regulating Screw
200594C	17052	Bobbin Case Tension Spring Screw
203216	17052	" " Washer (cloth)
233765	17052	Bobbin Case complete,Nos.200594C, 200984C,202056,203214,203216,203473, 203474,203648,233764,241674,241675 and two 350405C
233649	17056	Face Plate with 201650H and 350432XC
200462H	17056	" " Thumb Screw

From the library of: Superior Sewing Machine & Supply LLC

No.	Plate	Name
233694	17059	Feed Bar with 213610
213298	17059	" " Connecting Link with two 350411C
350411C	17059	Feed Bar Connecting Link Pinch Screw
200935F	17059	" " " " Screw Stud
201531E	17059	" " " " " Stud Nut
213610	17059	Feed Bar Connecting Link Stud
212307	17059	" Dog,for 233701
350149E	17059	" " Screw,for use with Platform Throat Plates
221163	17059	Feed Dog Stop Washer,for use with Platform Throat Plates
235082	17002	Feed Driving Eccentric Regulating Bracket
233612	17002	Feed Driving Eccentric Regulating Bracket 235082 with 224200,two each 201408C and 201525E
201408C	17002	Feed Driving Eccentric Regulating Bracket Hinge Screw
201525E	17002	Feed Driving Eccentric Regulating Bracket Hinge Screw Nut
202301	17002	Feed Driving Eccentric Regulating Bracket Plunger
202595	17002	Feed Driving Eccentric Regulating Bracket Plunger Spring
200607C	17002	Feed Driving Eccentric Regulating Bracket Plunger Spring Stop Screw
201408C	17002	Feed Driving Eccentric Regulating Bracket Stop Screw
201525E	17002	Feed Driving Eccentric Regulating Bracket Stop Screw Nut
200429F	17002	Feed Driving Eccentric Regulating Screw
200383C	17002	Feed Driving Eccentric Regulating Screw Check Screw
235011	17059	Feed Driving Rock Shaft
233614	17059	" " " " Bearing
201525E	17059	" " " " " Nut
235066	17059	" " " " Bushing
200346C	17059	" " " " " Set Screw
203244	17059	Feed Driving Rock Shaft Collar with two 200393C
200393C	17059	Feed Driving Rock Shaft Collar Set Screw
235842	17002	Feed Driving Rock Shaft Connection with 200054E and 202277
200919C	17002	Feed Driving Rock Shaft Connection Hinge Screw
201522E	17002	Feed Driving Rock Shaft Connection Hinge Screw Nut
202277	17002	Feed Driving Rock Shaft Connection Oil Packing (wick)
200054E	17002	Feed Driving Rock Shaft Connection Pinch Screw

From the library of: Superior Sewing Machine & Supply LLC

No.	Plate	Name
210559	17030	Feed Driving Rock Shaft Connection Stop Collar with two 200378C
200378C	17030	Feed Driving Rock Shaft Connection Stop Collar Set Screw
221164	17059	Feed Driving Rock Shaft Crank with 200038C
200038C	17059	Feed Driving Rock Shaft Crank Pinch Screw
233695	17059	Feed Lifting Cam with 200392C and 200447C
200447C	17059	Feed Lifting Cam Position Screw
233696	17059	" " " Retainer
200583H	17059	" " " " Screw
200392C	17059	" " " Set Screw
233615	17030	" Regulating Spindle with 202311, 202443 and 202619
*202311	-----	Feed Regulating Spindle Head
202443	17030	" " " " Pin
202619	17030	" " " " Position Pin
203061	17056	Foot Lifter Lifting Lever
200262H	17056	" " " " Hinge Screw
233390	17056	" " " " " Screw Washer
233361	17056	Foot Lifter Lifting Lever Position Spring
200273D	17056	Foot Lifter Lifting Lever Position Spring Screw
*203482	-----	Hook (sewing)
237726	17052	" 203482 with 201253F,201376C and 221148
233767	17052	Hook and Bobbin Case complete,Nos. 233765 and 237726
233697	17052	Hook Bevel Gear Socket,18 teeth
200556H	17052	" " " " Screw
233698	17003	" " Pinion with two 200386C
200386C	17003	" " " Set Screw
235015	17003	" Driving Counter Shaft
235016	17003	" " " " Bushing (back)
200346C	17003	Hook Driving Counter Shaft Bushing (back) Set Screw
235017	17003	Hook Driving Counter Shaft Bushing (front)
200346C	17003	Hook Driving Counter Shaft Bushing (front) Set Screw
235018	17003	Hook Driving Counter Shaft Gear with 200382C and 200398C
200398C	17003	Hook Driving Counter Shaft Gear Position Screw
200382C	17003	Hook Driving Counter Shaft Gear Set Screw
235019	17059	Hook Driving Counter Shaft Oil Tube (brass)
233699	17003	Hook Driving Shaft
235021	17003	" " " Bushing (back)

From the library of: Superior Sewing Machine & Supply LLC

No.	Plate	Name
200346C	17003	Hook Driving Shaft Bushing (back)
		Set Screw
213380	17003	Hook Driving Shaft Bushing (front)
201461C	17003	" " " " (front)
		Position Screw
203244	17003	Hook Driving Shaft Collar (front) with two 200393C
200393C	17003	Hook Driving Shaft Collar (front) Set Screw
235064	17003	Hook Driving Shaft Connection Belt Pulley with 202253 and two 201254C
201254C	17003	Hook Driving Shaft Connection Belt Pulley Set Screw
202253	17003	Hook Driving Shaft Connection Belt Pulley Spring Flange
235018	17003	Hook Driving Shaft Gear with 200382C and 200398C
200398C	17003	Hook Driving Shaft Gear Position Screw
200382C	17003	" " " " Set Screw
221148	17052	" Gib
201376C	17052	" " Hinge Screw
201253F	17052	" " Screw
233707	17052	" Saddle with 206758 and two 233708
206758	17052	" " Oil Packing (wick)
233708	17052	" " Oiling Felt
200541E	17052	" " Screw (2)
225837	17052	" " " Washer (2)
233700	17052	Hook Saddle complete,Nos.200110D, 200556H,203576,203578,233636, 233637,233697,233707 and 233767
233637	17052	Hook Washer with 233640 and three 221147
208545	17058	Lifting Bell Crank
233624	17057	" " " Driving Crank
208547	17057	" " " " " Link
201012C	17057	Lifting Bell Crank Driving Crank Position Screw
200383C	17057	Lifting Bell Crank Driving Crank Set Screw
200996C	17058	Lifting Bell Crank Stop Screw
204603	17058	" Presser Foot
200074F	17058	" " " Screw
233647	17057	Needle Bar with 200166F,200587D and 233648
233626	17057	Needle Bar Bushing
200352C	17057	" " " Set Screw
233642	17057	" " Connecting Link
264714	17057	" " " Stud with 200072C and 202277
202277	17057	Needle Bar Connecting Stud Oil Packing (wick)
200072C	17057	Needle Bar Connecting Stud Pinch Screw
233627	17057	" " Crank with 200335C,200383C, 200428C and 201012C
203172	17057	Needle Bar Crank Friction Washer
200428C	17057	" " " Position Screw
200335C	17057	" " " Set Screw

From the library of: Superior Sewing Machine & Supply LLC

No.	Plate	Name
233648	17057	Needle Bar Thread Guide
200587D	17057	" " " " Screw
200166F	17057	" Set Screw
238246	17058	Presser Bar (hollow) with 200074F
233763	17058	" " Bushing
200363AL	17058	" " " Set Screw
202554	17058	" " Lifter
200653C	17058	" " " Hinge Screw
233628	17058	" " Lifting Bracket with 200054E
200975F	17058	Presser Bar Lifting Bracket Guide Screw
200054E	17058	Presser Bar Lifting Bracket Pinch Screw
233634	17058	Presser Bar Position Guide
202338	17058	" " " " Lever with 200086F
200086F	17058	Presser Bar Position Guide Lever Pinch Screw
200352C	17058	Presser Bar Position Guide Set Screw
233646	17058	" " Spring
202346	17058	" " " Stop Rod
200492H	17058	" " Thumb Screw (pressure regulating)
200475H	17058	Presser Bar Thumb Screw Thumb Set Screw
244084	17058	Presser Bar Thumb Screw Thumb Set Screw Packing (fibre)
224372	17057	Take-up Lever
208557	17057	" " Driving Stud with 202277
202277	17057	" " " " Oil Packing (wick)
202400	17057	Take-up Lever Hinge Stud with 202423
202423	17057	" " " " Oil Packing (wick)
200383C	17057	Take-up Lever Hinge Stud Set Screw
208558	17057	" " Oil Guard with 223655 and 224572
200161H	17057	Take-up Lever Oil Guard Screw
208568	17057	" " " Leader
202254	17057	" " " " Packing (wick)
223655	17057	" " Oiling Felt
224572	17057	" " " " Rivet
244048	17055	Tension Disc (back)
244049	17055	" " (front)
202404	17058	" Release Plunger
233629	17058	" " Slide
208560	17058	" " " Spring
244061	17055	" " Washer
202407	17055	" Spring
263106	17055	" " Washer
200625F	17055	" Stud with 204925
200061C	17055	" " Set Screw
204925	17055	" " Washer
201572H	17055	" Thumb Nut

From the library of: Superior Sewing Machine & Supply LLC

No.	Plate	Name
244062	17055	Tension complete,Nos.200625F,201572H, 202407,202410,244048,244049,244061 and 263106
202410	17055	Thread Controller Spring
241443	17055	" " " Stop
200132E	17055	" " " " Screw
202412	17030	" Guide (on top of Arm)
202413	17055	" Guide
202414	17055	" Guide
202417	17055	" Guide
200355H	17055	" " Set Screw
200368H	17055	" " " Screw
241755	17056	" Lubricator Oil Pad (felt)
241756	17056	" " " " Holder
240439	17056	" " " " Retainer
241758	17056	" " " Reservoir
241759	17056	" " " Wick
350432XC	17056	" " Screw
201650H	17056	" " " Nut
214838	17056	" " " Washer
241760	17056	Thread Lubricator complete,Nos.214838, 240439,241755,241756,241758 and 241759
202091	17055	Thread Retainer Sleeve
202092	17055	" " Spring
204058	17055	" " Stud
200368H	17055	" " " Set Screw
204059	17055	Thread Retainer complete,Nos.202091, 202092 and 204058
233701	17059	Throat Plate,50 needle hole,for needle sizes 14 and 15,for 212307
200577AL	17059	Throat Plate Screw (2)
233630	17058	Vibrating Presser Bar
233631	17058	" " " Hinge Bracket
233632	17058	" " " Position Stop
200190D	17058	" " " " Stop Screw
200066D	17058	Vibrating Presser Bar Screw (2)
204493	17058	" " " Spring
206707	17058	" " Foot
200098F	17058	" " " Screw
203357	17058	" " " " Washer

From the library of: Superior Sewing Machine & Supply LLC

ACCESSORIES

FOR MACHINE NO. 47w61

No.	Plate	Name
203470	17052	Bobbin (5)
202803	17060	Presser Foot
4822	17060	Roller Presser Hinge Screw Nut Wrench
228476	17060	Screw Driver (Bobbin Case)
204033	17060	Wrench
128 x 4	-----	Needles,two each,sizes 11,12 and 13
227104	16762	Drip Pan (cast iron,square) with one wood screw 1-1/2 in.,No.14,R.H.B.
51078	17060	Machine Bolt (4)
6055	17060	" " Washer (4)
41401	17060	" Rest Pin (wood)
120342	17060	Oiler (copper plated) with 120343
120343	17060	" Spout,3-1/2 in. long
225498	17060	Screw Driver,7-1/4 in. long
225554	17060	Wrench (steel)

BOBBIN WINDER

(SWINGING AUTOMATIC, RIGHT HAND)

FOR 5/16 INCH ROUND BELT DRIVE

259428	16615	Brake (leather)
259429	16615	" Clamp
200113F	16615	" " Screw
225453	16615	Frame with 202277 and 259660
225454	16615	" Hinge Pin
202277	16615	" Oil Packing (wick)
259660	16615	" " Well Washer
225455	16615	" Spring
225456	16615	" " Plunger
225368	16615	Pulley with 200380C
200380C	16615	" Set Screw
225381	16615	Spindle
225444	16615	Stop Latch
200056E	16615	" " Screw
225458	16615	" " Thumb Lever
225459	16615	" " " " Hinge Stud
225459	16615	" " " " Joint Stud
202478	16615	" " Trip Lever

From the library of: Superior Sewing Machine & Supply LLC

No.	Plate	Name
200299H	16615	Stop Latch Trip Lever Hinge Screw
225461	16615	Tension Bracket with 201499H
200082D	16615	" " Screw
228026	16615	" " " Washer
2102	16615	" Disc
13710	16615	" Spring
201499H	16615	" Stud
201572H	16615	" " Thumb Nut
225462	16615	Bobbin Winder Tension Bracket complete,Nos.13710,201572H,225461 and two 2102
259430	16615	Bobbin Winder and Tension Bracket Base
259431	16615	Universal Bobbin Winder complete,Nos. 200056E,200082D,200113F,200299H, 202478,225368,225381,225444,225453 to 225456,225458,225462,228026, 259428 to 259430,two each 225459 and wood screws 3/4 in.,No.12,R.H.B.

FOOT LIFTER

227952	16762	Foot Lifter Lever with 227954
227678	16762	" " " Chain,48 in. long with 202784
227954	16762	Foot Lifter Lever Chain Hook (lower)
202784	16762	" " " " " (upper)
225016	16762	" " " Hinge Pin
227939	16762	" " " Stand with two wood screws 1 in.,No.12
227955	16762	Foot Lifter Lever complete,Nos.225016, 227678,227939 and 227952

(Other Foot Lifter Parts are listed with parts of machine head)

FOR MACHINE NO. 47w66

Same as for Machine No.47w61 with the following exceptions

(4822 Wrench and 202803 Presser Foot not used)

126 x 2	-----	Needles,two each,sizes 11,12 and 13, in place of 128 x 4 Needles

From the library of: Superior Sewing Machine & Supply LLC

BINDERS

BINDER

FOR BINDING SHOES, ETC.

FOR MACHINE NO. 47w66

No.	Plate	Name
230251	17042	Binder Clamp Washer
259090	17042	" Head,for tapes or folded strips in widths from 7/32 to 3/4 in.,in steps of 1/32 in.
231263	17042	Binder Plate Slide with 231202,two 231203 and five 226015
230845	17042	Binder Plate Slide Stop (adjustable)
203077	17042	" " " " Clamp Washer
200184B	17042	" " " " " Washer Screw
230846	17042	Binder Plate Slide Stop Swing Base
350472H	17042	" " " " " Base Hinge Screw
201525E	17042	Binder Plate Slide Stop Swing Base Hinge Screw Nut
225708	17042	Binder Plate Slide Stop Swing Base Spring
230847	17042	Binder Plate Slide Stop complete,Nos. 201525E,203077,225708,230845,230846, 350472H and two 200184B
200099D	17042	Binder Screw
226015	17042	" Tape Tension Pin
231202	17042	" " " Pin
231203	17042	" " " Pin
231093	17042	Tape Reel Base with 200755D
231094	17042	" " " 231093 with 201570D, 202491 and 230654
200077D	17042	Tape Reel Base Screw
200755D	17042	" " " " Stud
201570D	17042	" " Tension Adjusting Thumb Nut
230654	17042	" " " Spring
202491	17042	" " " Washer
259091	17042	Binder and Tape Reel complete,Nos. 230251,230847,231094,231263,259090, two each 200077D and 200099D
212220	17061	Feed Dog,for 233783
204601	17063	Lifting Presser Foot
206707	17058	Vibrating Presser Foot
233783	17061	Throat Plate,50 needle hole,for needle sizes 14 and 15,for 212220

From the library of: Superior Sewing Machine & Supply LLC

BINDER

FOR BINDING SLIPPERS, PUMPS, SANDALS

AND STRAPS WITH 3/8 IN. BINDING

FOR MACHINE NO. 47w66

No.	Plate	Name
230251	17043	Binder Clamp Washer
231114	17043	" Folder on Shank,for 5/16 in. binding,3/32 in. fold or 3/8 in. binding,1/8 in. fold
200190D	17043	Binder Folder Screw
231115	17043	" Guard Wire
259090	17043	" Head,for 7/32 or 1/4 in. binding
200099D	17043	Binder Head Screw
231116	17043	" Plate Slide with 231202 and two 231203
231202	17043	Binder Tape Tension Pin
231203	17043	" " " Pin
259092	17043	Binder complete,for 5/16 or 3/8 in. binding,Nos.230251,231114 to 231116,259090,two each 200099D and 200190D
212220	17061	Feed Dog,for 233783
204601	17063	Lifting Presser Foot
206707	17058	Vibrating Presser Foot
233783	17061	Throat Plate,50 needle hole,for needle sizes 14 and 15,for 212220

FEED DOGS

FOR MACHINE NO. 47w61

211407	17061	Feed Dog,for 233801
211943	17051	" " " 233801

FOR MACHINE NO. 47w66

212220	17061	Feed Dog,for 233783 and 233784
212221	17061	" " " 233783 and 233784
212307	17059	" " " 233701 and 233702

From the library of: Superior Sewing Machine & Supply LLC

PRESSER FEET

FOR MACHINE NO. 47w66

No.	Plate	Name
204595	17063	Lifting Presser Foot,for 204620
204601	17063	" " " " 206707 and 206716
204602	17048	Lifting Presser Foot,for 206672, 206673,206707 and 206715 to 206717
204603	17058	Lifting Presser Foot,for 206672, 206673,206707 and 206715 to 206717
204604	17047	Lifting Presser Foot,for 206668, 206675,206678,206714 and 206719
204605	17047	Lifting Presser Foot,for 206668, 206675,206678,206714 and 206719
204606	17063	Lifting Presser Foot,for 206676, 206699 and 206700
204607	17063	Lifting Presser Foot,for 206707 and 206716
204609	17046	Lifting Presser Foot,for 206672, 206673,206681,206707 and 206715 to 206717
204610	17063	Lifting Presser Foot,for 206676,206699 and 206700
204611	17062	Lifting Presser Foot,for 204620, 204634,206698,206705,206706 and 229620
204612	17062	Lifting Presser Foot,for 204620, 204634,206698,206705,206706 and 229620
204640	17062	Lifting Presser Foot,for 204620, 204634,206698 and 229620
206662	17046	Lifting Presser Foot,46 needle hole, for 206663
206664	17046	Lifting Presser Foot (grooved) 46 needle hole,for heavy cord covering, for 206665
206674	17047	Lifting Presser Foot,40 needle hole, for 206668,206675,206678,206714 and 206719
206694	17048	Lifting Presser Foot,for 204621,206692 and 206693
206695	17062	Lifting Presser Foot,for 204620, 204634,206698 and 229620
206696	17062	Lifting Presser Foot,46 needle hole, for 204620,204634,206698 and 229620
206697	17062	Lifting Presser Foot,for 204620, 204634,206698,206701 and 229620
206702	17046	Lifting Presser Foot,for 206703 and 206704
229625	17062	Lifting Presser Foot,for 204620, 204634,206698,206705,206706 and 229620

From the library of: Superior Sewing Machine & Supply LLC

No.	Plate	Name
229626	17062	Lifting Presser Foot,for 204620, 204634,206698 and 229620
229628	17048	Lifting Presser Foot,for 204621, 206692 and 206693
229629	17046	Lifting Presser Foot,for 206691 and 229630
229633	17048	Lifting Presser Foot,for 206672, 206673,206707 and 206715 to 206717
231276	17063	Lifting Presser Foot,53 Needle hole, for 231277
204620	17062	Vibrating Presser Foot,for 204595, 204611,204612,204640,206695 to 206697,229625 and 229626
204621	17048	Vibrating Presser Foot,for 206694 and 229628
204634	17062	Vibrating Presser Foot,for 204611, 204612,204640,206695 to 206697, 229625 and 229626
206663	17046	Vibrating Presser Foot,for 206662
206665	17046	" " " " 206664
206668	17047	" " " " 204604, 204605 and 206674
206672	17046	Vibrating Presser Foot,for 204602, 204603,204609 and 229633
206673	17046	Vibrating Presser Foot,for 204602, 204603,204609 and 229633
206675	17047	Vibrating Presser Foot,for 204604, 204605 and 206674
206676	17063	Vibrating Presser Foot,for 204606 and 204610
206678	17047	Vibrating Presser Foot,for 204604, 204605 and 206674
206681	17046	Vibrating Presser Foot,for 204609
206691	17046	" " " " 229629
206692	17048	" " " " 206694 and 229628
206693	17048	Vibrating Presser Foot,for 206694 and 229628
206698	17062	Vibrating Presser Foot,for 204611, 204612,204640,206695 to 206697, 229625 and 229626
206699	17063	Vibrating Presser Foot,for 204606 and 204610
206700	17063	Vibrating Presser Foot,for 204606 and 204610
206701	17062	Vibrating Presser Foot,for binding slippers,for 206697
206703	17046	Vibrating Presser Foot,for 206702
206704	17046	" " " " 206702
206705	17062	" " " " 204611, 204612 and 229625
206706	17062	Vibrating Presser Foot,for 204611, 204612 and 229625
206707	17058	Vibrating Presser Foot,for 204601 to 204603,204607,204609 and 229633
206714	17047	Vibrating Presser Foot,for 204604, 204605 and 206674

From the library of: Superior Sewing Machine & Supply LLC

No.	Plate	Name
206715	17046	Vibrating Presser Foot,for 204602, 204603,204609 and 229633
206716	17046	Vibrating Presser Foot,for 204601 to 204603,204607,204609 and 229633
206717	17046	Vibrating Presser Foot,for 204602, 204603,204609 and 229633
206719	17047	Vibrating Presser Foot,for 204604, 204605 and 206674
229620	17062	Vibrating Presser Foot,for 204611, 204612,204640,206695 to 206697, 229625 and 229626
229630	17046	Vibrating Presser Foot,for 229629
231277	17063	" " " " 231276

THROAT PLATES

FOR MACHINE NO. 47w61

233801	17051	Throat Plate,50 needle hole,for needle sizes 14 and 15,for 211407 and 211943

FOR MACHINE NO. 47w66

233701	17059	Throat Plate,50 needle hole,for needle sizes 14 and 15,for 212307
233702	17059	Throat Plate,46 needle hole,for needle sizes 16 and 18,for 212307
233783	17061	Throat Plate,50 needle hole,for needle sizes 14 and 15,for 212220 and 212221
233784	17061	Throat Plate,46 needle hole,for needle sizes 16 and 18,for 212220 and 212221

From the library of: Superior Sewing Machine & Supply LLC

NUMERICAL LIST OF PARTS

From the library of: Superior Sewing Machine & Supply LLC

From the library of: Superior Sewing Machine & Supply LLC

NUMERICAL LIST OF PARTS

No.	Plate	Name
1528J	17050	Roller Presser Hinge Screw Nut,for 201928
1766C	17050	Roller Presser Ball Cone,for 201928
2102	16615	Bobbin Winder Tension Disc,for 225462
4822	17060	Roller Presser Hinge Screw Nut Wrench, for Machine No.47w61
6055	17060	Machine Bolt Washer
13710	16615	Bobbin Winder Tension Spring,for 225462
16232	17050	Roller Presser Ball, 3/32 in. diam., for 201928
41401	17060	Machine Rest Pin (wood)
50553C	17050	Roller Presser Hinge Screw,for 201928
51078	17060	Machine Bolt
120342	17060	Oiler (copper plated) with 120343
120343	17060	" Spout,3-1/2 in. long,for 120342
200010E	17002	Arm Screw
200030H	17053	Bed Hinge Screw
200038C	17051	Feed Driving Rock Shaft Crank Pinch Screw,for 221164
200054E	17002	Feed Driving Rock Shaft Connection Pinch Screw,for 235842
200054E	17058	Presser Bar Lifting Bracket Pinch Screw,for 233628
200056E	16615	Bobbin Winder Stop Latch Screw,for 259431
200061C	17054	Tension Stud Set Screw
200066D	17058	Vibrating Presser Bar Screw,for Machine No.47w66
200072C	17007	Needle Bar Connecting Stud Pinch Screw,for 264714
200074F	17058	Lifting Presser Foot Screw,for 238246
200077D	17042	Tape Reel Base Screw,for 259091
200079H	17030	Arm Cap Spool Holder Wire Hinge Screw, for 203090
200082D	16615	Bobbin Winder Tension Bracket Screw, for 259431
200086F	17050	Presser Bar Position Guide Lever Pinch Screw,for 202338
200096D	17050	Roller Presser Arm Screw,for 233808
200098F	17058	Vibrating Presser Foot Screw,for Machine No.47w66
200099D	17043	Binder Head Screw,for 259092
200099D	17042	" Screw,for 259091
200100D	17053	Bed (cylinder) Cap Screw
200110D	17052	Bobbin Case Lever Fulcrum Screw,for 233700

From the library of: Superior Sewing Machine & Supply LLC

No.	Plate	Name
200113F	16615	Bobbin Winder Brake Clamp Screw,for 259431
200117F	17050	Roller Presser Arm Bracket Position Collar Position Screw,for 233808
200125F	17007	Needle Set Screw,for 233625
200132E	17050	Take-up Lever Oiling Felt Screw,for Machine No.47w61
200132E	17054	Thread Controller Spring Stop Screw
200141F	17050	Roller Presser Arm Bracket Spring Stop Screw,for 233808
200161D	17007	Needle Bar Connecting Link Oil Guard Screw,for Machine No.47w61
200161H	17057	Take-up Lever Oil Guard Screw,for Machine No.47w66
200164B	17003	Arm Shaft Connection Belt Timing Plate Screw
200166F	17057	Needle Set Screw,for 233647
200175D	17007	Needle Bar Thread Guide Screw,for 233625
200184B	17042	Binder Plate Slide Stop Clamp Washer Screw,for 230847
200190D	17043	Binder Folder Screw,for 259092
200190D	17058	Vibrating Presser Bar Position Stop Screw,for Machine No.47w66
200260D	17050	Presser Bar Lifting Releasing Lever Bracket Guide Screw,for Machine No. 47w61
200262H	17053	Bed Clamp Hinge Screw
200262H	17053	Foot Lifter Lifting Lever Hinge Screw
200273D	17053	" " " " Position Spring Screw
200278H	17030	Arm Cap Screw
200299H	16615	Bobbin Winder Stop Latch Trip Lever Hinge Screw,for 259431
200327C	17002	Arm Shaft Connection Belt Pulley Set Screw,for 224200
200328C	17030	Balance Wheel Position Screw,for 241561
200335C	17030	Balance Wheel Set Screw ,for 241561
200335C	17007	Needle Bar Crank Set Screw,for 202692 and 233627
200338C	17030	Arm Shaft Bushing (back) Set Screw
200338C	17030	" " " (front) Set Screw
200346C	17051	Feed Driving Rock Shaft Bushing Set Screw
200346C	17003	Hook Driving Counter Shaft Bushing (back) Set Screw
200346C	17003	Hook Driving Counter Shaft Bushing (front) Set Screw
200346C	17003	Hook Driving Shaft Bushing (back) Set Screw
200352C	17007	Needle Bar Bushing Set Screw
200352C	17050	Presser Bar Position Guide Set Screw
200355H	17054	Thread Guide Set Screw
200362C	17050	Roller Presser Arm Bracket Position Collar Set Screw,for 235088
200363AL	17050	Presser Bar Bushing Set Screw

From the library of: Superior Sewing Machine & Supply LLC

No.	Plate	Name
200368H	17055	Thread Guide Set Screw,for Machine No.47w66
200368H	17054	Thread Retainer Stud Set Screw
200374C	17007	Needle Bar Connecting Link Stud Set Screw,for 202692
200374C	17007	Take-up Lever Hinge Stud Set Screw, for Machine No.47w61
200378C	17030	Feed Driving Rock Shaft Connection Stop Collar Set Screw,for 210559
200380C	16615	Bobbin Winder Pulley Set Screw,for 225368
200382C	17003	Hook Driving Counter Shaft Gear Set Screw,for 235018
200382C	17003	Hook Driving Shaft Gear Set Screw,for 235018
200383C	17002	Feed Driving Eccentric Regulating Screw Check Screw
200383C	17057	Lifting Bell Crank Driving Crank Set Screw,for 233627
200383C	17007	Needle Bar Connecting Link Stud Set Screw,for 202692
200383C	17057	Take-up Lever Hinge Stud Set Screw,for Machine No.47w66
200386C	17003	Hook Bevel Pinion Set Screw,for 233698
200392C	17051	Feed Lifting Cam Set Screw,for 233695
200393C	17051	" Driving Rock Shaft Collar Set Screw,for 203244
200393C	17003	Hook Driving Shaft Collar (front) Set Screw,for 203244
200397H	17054	Thread Guide Set Screw,for Machine No.47w61
200398C	17003	Hook Driving Counter Shaft Gear Position Screw,for 235018
200398C	17003	Hook Driving Shaft Gear Position Screw,for 235018
200428C	17007	Needle Bar Crank Position Screw,for 202692 and 233627
200429F	17002	Feed Driving Eccentric Regulating Screw
200447C	17051	Feed Lifting Cam Position Screw,for 233695
200459D	17056	Bed Slide Clamp Plate (back) Thumb Screw,for Machine No.47w66
200462H	17053	Face Plate Thumb Screw
200475H	17050	Presser Bar Thumb Screw Thumb Set Screw
200492H	17050	Presser Bar Thumb Screw (pressure regulating)
200502H	17030	Arm Shaft Bushing (front) Oil Packing Thumb Screw
200541E	17052	Hook Saddle Screw
200556H	17052	Hook Bevel Gear Socket Screw,for 233700
200577AL	17051	Throat Plate Screw
200580H	17053	Bed Slide Clamp Plate Screw
200583H	17051	Feed Lifting Cam Retainer Screw

From the library of: Superior Sewing Machine & Supply LLC

No.	Plate	Name
200585H	17030	Arm Cap Spool Holder Base Screw,for 203092
200587D	17057	Needle Bar Thread Guide Screw,for 233647
200594C	17052	Bobbin Case Tension Spring Screw,for 233765
200602C	17002	Arm Shaft Connection Belt Pulley Position Screw,for 224200
200607C	17002	Feed Driving Eccentric Regulating Bracket Plunger Spring Stop Screw
200625F	17054	Tension Stud with 204925,for 244062
200653C	17050	Presser Bar Lifter Hinge Screw
200728B	17053	Bed Clamp Thumb Screw
200755D	17042	Tape Reel Base Screw Stud,for 231093
200919C	17002	Feed Driving Rock Shaft Connection Hinge Screw
200935F	17051	Feed Bar Connecting Link Screw Stud
200975F	17058	Presser Bar Lifting Bracket Guide Screw,for Machine No.47w66
200984C	17052	Bobbin Case Tension Spring Regulating Screw,for 233765
200996C	17058	Lifting Bell Crank Stop Screw,for Machine No.47w66
201012C	17057	Lifting Bell Crank Driving Crank Position Screw,for 233627
201253F	17052	Hook Gib Screw,for 237726
201254C	17003	" Driving Shaft Connection Belt Pulley Set Screw,for 235064
201376C	17052	Hook Gib Hinge Screw,for 237726
201408C	17002	Feed Driving Eccentric Regulating Bracket Hinge Screw,for 233612
201408C	17002	Feed Driving Eccentric Regulating Bracket Stop Screw,for 233612
201461C	17003	Hook Driving Shaft Bushing (front) Position Screw,for 233693
201499H	16615	Bobbin Winder Tension Stud,for 225461
201522E	17002	Feed Driving Rock Shaft Connection Hinge Screw Nut
201525E	17042	Binder Plate Slide Stop Swing Base Hinge Screw Nut,for 230847
201525E	17002	Feed Driving Eccentric Regulating Bracket Hinge Screw Nut,for 233612
201525E	17002	Feed Driving Eccentric Regulating Bracket Stop Screw Nut,for 233612
201525E	17051	Feed Driving Rock Shaft Bearing Nut
201531E	17051	" Bar Connecting Link Screw Stud Nut
201570D	17042	Tape Reel Tension Adjusting Thumb Nut, for 231094
201572H	16615	Bobbin Winder Tension Stud Thumb Nut, for 225462
201572H	17054	Tension Thumb Nut,for 244062
201650H	17053	Thread Lubricator Screw Nut,for 233649 and 241753
201928	17050	Roller Presser,1-1/4 in. diam.,3/16 in. face (fine) with 1528J,1766C, 50553C and twenty-four 16232,for 203427

From the library of: Superior Sewing Machine & Supply LLC

No.	Plate	Name
202005	17002	Arm Screw Washer
*202056	-----	Bobbin Case Latch Pin,for 233765
202091	17054	Thread Retainer Sleeve,for 204059
202092	17054	" " Spring,for 204059
202135	17053	Face Plate Position Pin,for 233757
202244	17030	Arm Shaft Bushing (back) Oil Packing (wick),for 240802
202244	17030	Arm Shaft Bushing (front) Oil Packing (wick),for 207080
202248	17030	Arm Cap Screw Washer
202253	17002	" Shaft Connection Belt Pulley Spring Flange,for 224200
202253	17003	Hook Driving Shaft Connection Belt Pulley Spring Flange,for 235064
202254	17007	Needle Bar Connecting Link Stud Oil Packing (wick),for 202333
202254	17057	Take-up Lever Oil Leader Packing (wick),for Machine No.47w66
202277	16615	Bobbin Winder Frame Oil Packing (wick),for 225453
202277	17002	Feed Driving Rock Shaft Connection Oil Packing (wick),for 235842
202277	17007	Needle Bar Connecting Stud Oil Packing (wick),for 264714
202277	17007	Take-up Lever Driving Stud Oil Packing (wick),for 202399 and 208557
202301	17002	Feed Driving Eccentric Regulating Bracket Plunger
*202311	-----	Feed Regulating Spindle Head,for 233615
202333	17007	Needle Bar Connecting Link Stud with 202254,for 202692
202337	17050	Presser Bar Position Guide,for Machine No.47w61
202338	17050	Presser Bar Position Guide Lever with 200086F
202346	17050	Presser Bar Spring Stop Rod
202378	17050	" " Spring,for Machine No.47w61
202399	17007	Take-up Lever Driving Stud with 202277,for Machine No.47w61
202400	17007	Take-up Lever Hinge Stud with 202423
202401	17050	" " Oiling Felt,for Machine No.47w61
202404	17050	Tension Release Plunger
202407	17054	" Spring,for 244062
202410	17054	Thread Controller Spring,for 244062
202412	17030	" Guide (on top of Arm)
202413	17054	" Guide
202414	17054	" Guide
202417	17054	" Guide
202423	17007	Take-up Lever Hinge Stud Oil Packing (wick),for 202400
202443	17030	Feed Regulating Spindle Head Pin,for 233615

From the library of: Superior Sewing Machine & Supply LLC

No.	Plate	Name
202478	16615	Bobbin Winder Stop Latch Trip Lever, for 259431
202491	17042	Tape Reel Tension Washer, for 231094
202554	17058	Presser Bar Lifter, for Machine No. 47w66
		Nos. 202557 to 202559, for 233808
202557	17050	Roller Presser Bar (hollow)
202558	17050	" " Arm Bracket Spring
202559	17050	" " " " " Stop
202595	17002	Feed Driving Eccentric Regulating Bracket Plunger Spring
202618	17053	Bed Hinge
202619	17030	Feed Regulating Spindle Head Position Pin, for 233615
202622	17053	Bed Clamp Packing Washer
202692	17007	Needle Bar Crank with 200335C, 200374C, 200383C, 200428C and 202333, for Machine No. 47w61
202784	16762	Foot Lifter Lever Chain Hook (upper), for 227678
202803	17060	Presser Foot, for Machine No. 47w61
203061	17053	Foot Lifter Lifting Lever
203077	17042	Binder Plate Slide Stop Clamp Washer, for 230847
203089	17030	Arm Cap Spool Holder Base, for 203090
203090	17030	" " " " " 203089 with 200079H and 204296, for 203092
203091	17030	Arm Cap, for 203092
203092	17030	Arm Cap and Spool Holder complete, Nos. 203090, 203091 and two 200585H
203172	17007	Needle Bar Crank Friction Washer
203184	17053	Bed Clamp
203185	17053	" " Washer
203214	17052	Bobbin Case Tension Spring, for 233765
203216	17052	" " Washer (cloth), for 233765
203244	17051	Feed Driving Rock Shaft Collar with two 200393C
203244	17003	Hook Driving Shaft Collar (front) with two 200393C
203357	17058	Vibrating Presser Foot Screw Washer, for Machine No. 47w66
203426	17050	Roller Presser Arm, for 203427
203427	17050	" " " 203426 with 201928, for 233808
203470	17052	Bobbin
203473	17052	" Case Latch Plunger, for 233765
203474	17052	" " " Spring, for 233765
*203482	-----	Hook (sewing), for 237726
203576	17052	Bobbin Case Lever Fulcrum with 203579, for 233700
203578	17052	Bobbin Case Lever Slide, for 233700
203579	17052	" " " " Stud, for 203576
203648	17052	" " Latch, for 233765
204033	17060	Wrench
204058	17054	Thread Retainer Stud, for 204059
204059	17054	Thread Retainer complete, Nos. 202091, 202092 and 204058

From the library of: Superior Sewing Machine & Supply LLC

No.	Plate	Name
204235	17002	Arm Position Pin
204250	17007	Needle Bar Thread Guide,for 233625
204296	17030	Arm Cap Spool Holder Wire,for 203090
204493	17058	Vibrating Presser Bar Spring,for Machine No.47w66
204595	17063	Lifting Presser Foot,for 204620,for Machine No.47w66
		Nos.204601 to 204607,for Machine No.47w66
204601	17063	Lifting Presser Foot,for 206707 and 206716
204602	17048	Lifting Presser Foot,for 206672, 206673,206707 and 206715 to 206717
204603	17058	Lifting Presser Foot,for 206672, 206673,206707 and 206715 to 206717
204604	17047	Lifting Presser Foot,for 206668, 206675,206678,206714 and 206719
204605	17047	Lifting Presser Foot,for 206668, 206675,206678,206714 and 206719
204606	17063	Lifting Presser Foot,for 206676, 206699 and 206700
204607	17063	Lifting Presser Foot,for 206707 and 206716
		Nos.204609 to 204612,for Machine No.47w66
204609	17046	Lifting Presser Foot,for 206672, 206673,206681,206707 and 206715 to 206717
204610	17063	Lifting Presser Foot,for 206676, 206699 and 206700
204611	17062	Lifting Presser Foot,for 204620, 204634,206698,206705,206706 and 229620
204612	17062	Lifting Presser Foot,for 204620, 204634,206698,206705,206706 and 229620
204620	17062	Vibrating Presser Foot,for 204595, 204611,204612,204640,206695 to 206697,229625 and 229626
204621	17048	Vibrating Presser Foot,for 206694 and 229628
204634	17062	Vibrating Presser Foot,for 204611, 204612,204640,206695 to 206697, 229625 and 229626
204640	17062	Lifting Presser Foot,for 204620, 204634,206698 and 229620,for Machine No.47w66
204925	17054	Tension Stud Washer,for 200625F
206608	17050	Presser Bar Lifting Releasing Lever Bracket Spring,for Machine No.47w61
206662	17046	Lifting Presser Foot,46 needle hole, for 206663,for Machine No.47w66
206663	17046	Vibrating Presser Foot,for 206662
206664	17046	Lifting Presser Foot (grooved) 46 needle hole,for heavy cord covering, for 206665,for Machine No.47w66
206665	17046	Vibrating Presser Foot,for 206664
206668	17047	" " " " 204604, 204605 and 206674

From the library of: Superior Sewing Machine & Supply LLC

No.	Plate	Name
206672	17046	Vibrating Presser Foot,for 204602, 204603,204609 and 229633
206673	17046	Vibrating Presser Foot,for 204602, 204603,204609 and 229633
206674	17047	Lifting Presser Foot,40 needle hole, for 206668,206675,206678,206714 and 206719,for Machine No.47w66
206675	17047	Vibrating Presser Foot,for 204604, 204605 and 206674
206676	17063	Vibrating Presser Foot,for 204606 and 204610
206678	17047	Vibrating Presser Foot,for 204604, 204605 and 206674
206681	17046	Vibrating Presser Foot,for 204609
206691	17046	" " " " 229629
206692	17048	" " " " 206694 and 229628
206693	17048	Vibrating Presser Foot,for 206694 and 229628
		Nos.206694 to 206697,for Machine No.47w66
206694	17048	Lifting Presser Foot,for 204621, 206692 and 206693
206695	17062	Lifting Presser Foot,for 204620, 204634,206698 and 229620
206696	17062	Lifting Presser Foot,46 needle hole, for 204620,204634,206698 and 229620
206697	17062	Lifting Presser Foot,for 204620, 204634,206698,206701 and 229620
206698	17062	Vibrating Presser Foot,for 204611, 204612,204640,206695 to 206697, 229625 and 229626
206699	17063	Vibrating Presser Foot,for 204606 and 204610
206700	17063	Vibrating Presser Foot,for 204606 and 204610
206701	17062	Vibrating Presser Foot,for binding slippers,for 206697
206702	17046	Lifting Presser Foot,for 206703 and 206704,for Machine No.47w66
206703	17046	Vibrating Presser Foot,for 206702
206704	17046	" " " " 206702
206705	17062	" " " " 204611, 204612 and 229625
206706	17062	Vibrating Presser Foot,for 204611, 204612 and 229625
206707	17058	Vibrating Presser Foot,for 204601 to 204603,204607,204609 and 229633
206714	17047	Vibrating Presser Foot,for 204604, 204605 and 206674
206715	17046	Vibrating Presser Foot,for 204602, 204603,204609 and 229633
206716	17046	Vibrating Presser Foot,for 204601 to 204603,204607,204609 and 229633
206717	17046	Vibrating Presser Foot,for 204602, 204603,204609 and 229633
206719	17047	Vibrating Presser Foot,for 204604, 204605 and 206674

From the library of: Superior Sewing Machine & Supply LLC

No.	Plate	Name
206758	17052	Hook Saddle Oil Packing (wick),for 233707
207080	17030	Arm Shaft Bushing (front) with 202244
208260	17050	Presser Bar Bushing,for Machine No.47w61
208313	17050	Presser Bar Lifter,for Machine No.47w61
208545	17058	Lifting Bell Crank,for Machine No.47w66
208547	17057	Lifting Bell Crank Driving Crank Link, for Machine No.47w66
208557	17057	Take-up Lever Driving Stud with 202277,for Machine No.47w66
208558	17057	Take-up Lever Oil Guard with 223655 and 224572,for Machine No.47w66
208560	17058	Tension Release Slide Spring,for Machine No.47w66
208568	17057	Take-up Lever Oil Leader,for Machine No.47w66
210559	17030	Feed Driving Rock Shaft Connection Stop Collar with two 200378C
211407	17061	Feed Dog,for 233801
211943	17051	" " " 233801
212220	17061	" " " 233783 and 233784
212221	17061	" " " 233783 and 233784
212307	17059	" " " 233701 and 233702
213298	17051	" Bar Connecting Link with two 350411C
213380	17003	Hook Driving Shaft Bushing (front),for 233693
213610	17051	Feed Bar Connecting Link Stud,for 233694
213787	17053	Bed (cylinder) End Cover
213890	17053	" Base (4 in. high)
214838	17053	Thread Lubricator Screw Washer,for 241760
221147	17052	Bobbin Case Lever Eccentric Position Pin,for 233637
221148	17052	Hook Gib,for 237726
221163	17051	Feed Dog Stop Washer,for use with Platform Throat Plates
221164	17051	Feed Driving Rock Shaft Crank with 200038C
221174	17053	Bed Slide (back)
222404	17053	" (cylinder) Cap Position Pin
223655	17057	Take-up Lever Oiling Felt,for 208558
224200	17002	Arm Shaft Connection Belt Pulley with 200327C,200602C and two 202253,for 233612
224372	17007	Take-up Lever
224392	17030	Arm Shaft Oil Packing (wick),for 233691
224572	17057	Take-up Lever Oiling Felt Rivet,for 208558
225016	16762	Foot Lifter Lever Hinge Pin,for 227955
225368	16615	Bobbin Winder Pulley with 200380C, for 259431

From the library of: Superior Sewing Machine & Supply LLC

No.	Plate	Name
225381	16615	Bobbin Winder Spindle,for 259431
225444	16615	" " Stop Latch,for 259431 Nos.225453 to 225456,for 259431
225453	16615	Bobbin Winder Frame with 202277 and 259660
225454	16615	Bobbin Winder Frame Hinge Pin
225455	16615	" " " Spring
225456	16615	" " " " Plunger
225458	16615	" " Stop Latch Thumb Lever, for 259431
225459	16615	Bobbin Winder Stop Latch Thumb Lever Hinge Stud,for 259431
225459	16615	Bobbin Winder Stop Latch Thumb Lever Joint Stud,for 259431
225461	16615	Bobbin Winder Tension Bracket with 201499H,for 225462
225462	16615	Bobbin Winder Tension Bracket complete,Nos.13710,201572H,225461 and two 2102,for 259431
225498	17060	Screw Driver,7-1/4 in. long
225554	17060	Wrench (steel)
225708	17042	Binder Plate Slide Stop Swing Base Spring,for 230847
225837	17052	Hook Saddle Screw Washer
226015	17042	Binder Tape Tension Pin,for 231263
226071	17056	Bed Slide Clamp Plate (back) Thumb Screw Washer,for Machine No.47w66
227104	16762	Drip Pan (cast iron,square) with one wood screw 1-1/2 in.,No.14,R.H.B.
227678	16762	Foot Lifter Lever Chain,48 in. long with 202784,for 227955
227939	16762	Foot Lifter Lever Stand with two wood screws 1 in.,No.12,for 227955
227952	16762	Foot Lifter Lever with 227954,for 227955
227954	16762	Foot Lifter Lever Chain Hook (lower), for 227952
227955	16762	Foot Lifter Lever complete,Nos.225016, 227678,227939 and 227952
228026	16615	Bobbin Winder Tension Bracket Screw Washer,for 259431
228476	17060	Screw Driver (Bobbin Case)
229620	17062	Vibrating Presser Foot,for 204611, 204612,204640,206695 to 206697, 229625 and 229626
229625	17062	Lifting Presser Foot,for 204620, 204634,206698,206705,206706 and 229620,for Machine No.47w66
229626	17062	Lifting Presser Foot,for 204620, 204634,206698 and 229620,for Machine No.47w66
229628	17048	Lifting Presser Foot,for 204621,206692 and 206693,for Machine No.47w66
229629	17046	Lifting Presser Foot,for 206691 and 229630,for Machine No.47w66
229630	17046	Vibrating Presser Foot,for 229629

From the library of: Superior Sewing Machine & Supply LLC

No.	Plate	Name
229633	17048	Lifting Presser Foot,for 206672, 206673,206707 and 206715 to 206717, for Machine No.47w66
230251	17042	Binder Clamp Washer,for 259091 and 259092
230654	17042	Tape Reel Tension Spring,for 231094
230845	17042	Binder Plate Slide Stop (adjustable), for 230847
230846	17042	Binder Plate Slide Stop Swing Base, for 230847
230847	17042	Binder Plate Slide Stop complete,Nos. 201525E,203077,225708,230845,230846, 350472H and two 200184B,for 259091
231093	17042	Tape Reel Base with 200755D,for 231094
231094	17042	Tape Reel Base 231093 with 201570D, 202491 and 230654,for 259091
		Nos.231114 to 231116,for 259092
231114	17043	Binder Folder on Shank,for 5/16 in. binding,3/32 in. fold or 3/8 in. binding,1/8 in. fold
231115	17043	Binder Guard Wire
231116	17043	" Plate Slide with 231202 and two 231203
231202	17042	Binder Tape Tension Pin,for 231116 and 231263
231203	17042	Binder Tape Tension Pin,for 231116 and 231263
231263	17042	Binder Plate Slide with 231202,two 231203 and five 226015,for 259091
231276	17063	Lifting Presser Foot,53 needle hole, for 231277,for Machine No.47w66
231277	17063	Vibrating Presser Foot,for 231276
233361	17053	Foot Lifter Lifting Lever Position Spring
233390	17053	Foot Lifter Lifting Lever Hinge Screw Washer
233607	17053	Bed (cylinder) Cap
233609	17053	" Slide Clamp Plate (front)
233612	17002	Feed Driving Eccentric Regulating Bracket 235082 with 224200,two each 201408C and 201525E
233614	17051	Feed Driving Rock Shaft Bearing
233615	17030	" Regulating Spindle with 202311, 202443 and 202619
233624	17057	Lifting Bell Crank Driving Crank,for Machine No.47w66
233625	17007	Needle Bar with 200125F,200175D and 204250,for Machine No.47w61
233626	17007	Needle Bar Bushing
		Nos.233627 to 233632,for Machine No.47w66
233627	17057	Needle Bar Crank with 200335C,200383C, 200428C and 201012C
233628	17058	Presser Bar Lifting Bracket with 200054E
233629	17058	Tension Release Slide
233630	17058	Vibrating Presser Bar

From the library of: Superior Sewing Machine & Supply LLC

No.	Plate	Name
233631	17058	Vibrating Presser Bar Hinge Bracket
233632	17058	" " " Position Stop
233634	17058	Presser Bar Position Guide,for Machine No.47w66
233636	17052	Bobbin Case Lever,for 233700
233637	17052	Hook Washer with 233640 and three 221147,for 233700
*233640	-----	Bobbin Case Lever Eccentric,for 233637
233642	17057	Needle Bar Connecting Link,for Machine No.47w66
233643	17053	Bed Slide Clamp Plate (back)
233646	17058	Presser Bar Spring,for Machine No.47w66
233647	17057	Needle Bar with 200166F,200587D and 233648,for Machine No.47w66
233648	17057	Needle Bar Thread Guide,for 233647
233649	17056	Face Plate with 201650H and 350432XC, for Machine No.47w66
*233690	-----	Arm,for Machine No.47w66
233691	17030	" Shaft with 224392 and 350431E
233692	17003	" " Connection Belt Timing Plate
*233693	-----	Bed (cylinder) with 201461C and 213380
233694	17051	Feed Bar with 213610
233695	17051	" Lifting Cam with 200392C and 200447C
233696	17051	Feed Lifting Cam Retainer
233697	17052	Hook Bevel Gear Socket,18 teeth,for 233700
233698	17003	Hook Bevel Pinion with two 200386C
233699	17003	" Driving Shaft
233700	17052	Hook Saddle complete,Nos.200110D, 200556H,203576,203578,233636,233637, 233697,233707 and 233767
233701	17059	Throat Plate,50 needle hole,for needle sizes 14 and 15,for 212307,for Machine No.47w66
233702	17059	Throat Plate,46 needle hole,for needle sizes 16 and 18,for 212307,for Machine No.47w66
233707	17052	Hook Saddle with 206758 and two 233708,for 233700
233708	17052	Hook Saddle Oiling Felt,for 233707
*233757	-----	Arm with 202135,for Machine No.47w61
233763	17058	Presser Bar Bushing,for Machine No.47w66
*233764	-----	Bobbin Case,for 233765
233765	17052	Bobbin Case complete,Nos.200594C, 200984C,202056,203214,203216,203473, 203474,203648,233764,241674,241675 and two 350405C,for 233767
233767	17052	Hook and Bobbin Case complete,Nos. 233765 and 237726,for 233700
233783	17061	Throat Plate,50 needle hole,for needle sizes 14 and 15,for 212220 and 212221,for Machine No.47w66
233784	17061	Throat Plate,46 needle hole,for needle sizes 16 and 18,for 212220 and 212221,for Machine No.47w66

From the library of: Superior Sewing Machine & Supply LLC

No.	Plate	Name
233801	17051	Throat Plate,50 needle hole,for needle sizes 14 and 15,for 211407 and 211943,for Machine No.47w61
233807	17050	Roller Presser Arm Bracket,for 233808
233808	17050	Roller Presser and Bar complete,Nos. 200096D,200117F,202557 to 202559, 203427,233807,235088 and two 200141F,for Machine No.47w61
235003	17002	Arm Shaft Connection Belt
235011	17051	Feed Driving Rock Shaft
235015	17003	Hook Driving Counter Shaft
235016	17003	" " " " Bushing (back)
235017	17003	Hook Driving Counter Shaft Bushing (front)
235018	17003	Hook Driving Counter Shaft Gear with 200382C and 200398C
235018	17003	Hook Driving Shaft Gear with 200382C and 200398C
235019	17051	Hook Driving Counter Shaft Oil Tube (brass)
235021	17003	Hook Driving Shaft Bushing (back)
235064	17003	" " " Connection Belt Pulley with 202253 and two 201254C
235066	17051	Feed Driving Rock Shaft Bushing
235082	17002	" " Eccentric Regulating Bracket,for 233612
235088	17050	Roller Presser Arm Bracket Position Collar with 200362C,for 233808
235842	17002	Feed Driving Rock Shaft Connection with 200054E and 202277
237726	17052	Hook 203482 with 201253F,201376C and 221148,for 233767
238246	17058	Presser Bar (hollow) with 200074F, for Machine No.47w66
238251	17007	Needle Bar Connecting Link,for Machine No.47w61
240439	17053	Thread Lubricator Oil Pad Retainer,for 241760
240802	17030	Arm Shaft Bushing (back) with 202244
241443	17054	Thread Controller Spring Stop
241561	17030	Balance Wheel (disc) (belt groove 2-3/4 in. diam.) with 200328C and 200335C
241674	17052	Bobbin Case Oiling Felt,for 233765
241675	17052	" " " " Retainer,for 233765
241753	17053	Face Plate with 201650H and 350432XC for Machine No.47w61
241755	17053	Thread Lubricator Oil Pad (felt),for 241760
241756	17053	Thread Lubricator Oil Pad Holder,for 241760
241758	17053	Thread Lubricator Oil Reservoir,for 241760
241759	17053	Thread Lubricator Oil Wick,for 241760

From the library of: Superior Sewing Machine & Supply LLC

No.	Plate	Name
241760	17053	Thread Lubricator complete,Nos.214838, 240439,241755,241756,241758 and 241759
244004	17050	Presser Bar Lifting Releasing Lever Bracket,for Machine No.47w61
244048	17054	Tension Disc (back),for 244062
244049	17054	" " (front),for 244062
244061	17054	" Release Washer,for 244062
244062	17054	Tension complete,Nos.200625F,201572H, 202407,202410,244048,244049,244061 and 263106
244084	17050	Presser Bar Thumb Screw Thumb Set Screw Packing (fibre)
259090	17042	Binder Head,for tapes or folded strips in widths from 7/32 to 3/4 in.,in steps of 1/32 inch,for 259091 and 259092
259091	17042	Binder and Tape Reel complete,Nos. 230251,230847,231094,231263,259090, two each 200077D and 200099D,for Machine No.47w66
259092	17043	Binder complete,for 5/16 or 3/8 in. binding,Nos.230251,231114 to 231116, 259090,two each 200099D and 200190D, for Machine No.47w66
		Nos.259428 to 259430,for 259431
259428	16615	Bobbin Winder Brake (leather)
259429	16615	" " " Clamp
259430	16615	" " and Tension Bracket Base
259431	16615	Universal Bobbin Winder complete,Nos. 200056E,200082D,200113F,200299H, 202478,225368,225381,225444,225453 to 225456,225458,225462,228026, 259428 to 259430,two each 225459 and wood screws 3/4 in.,No.12,R.H.B.
259660	16615	Bobbin Winder Frame Oil Well Washer, for 225453
263106	17054	Tension Spring Washer,for 244062
264714	17007	Needle Bar Connecting Stud with 200072C and 202277
264718	17007	Needle Bar Connecting Link Oil Guard, For Machine No.47w61
350149E	17051	Feed Dog Screw,for use with Platform Throat Plates
350405C	17052	Bobbin Case Oiling Felt Retainer Screw,for 233765
350411C	17051	Feed Bar Connecting Link Pinch Screw, for 213298
350431E	17030	Arm Shaft Oil Packing Stop Screw,for 233691
350432XC	17053	Thread Lubricator Screw,for 233649 and 241753
350472H	17042	Binder Plate Slide Stop Swing Base Hinge Screw,for 230847

From the library of: Superior Sewing Machine & Supply LLC

ILLUSTRATIONS
OF
PARTS

From the library of: Superior Sewing Machine & Supply LLC

From the library of: Superior Sewing Machine & Supply LLC

16615 - 1/2

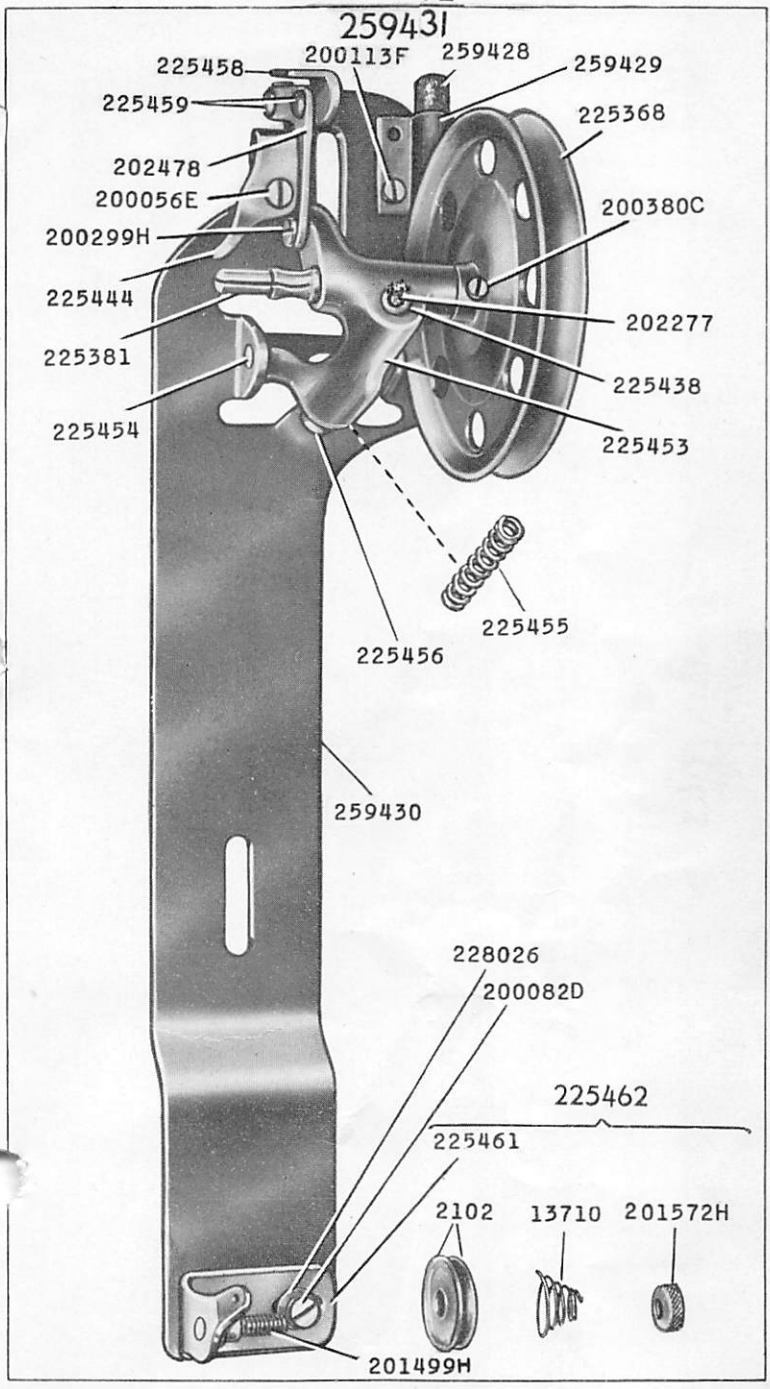

From the library of: Superior Sewing Machine & Supply LLC

227955

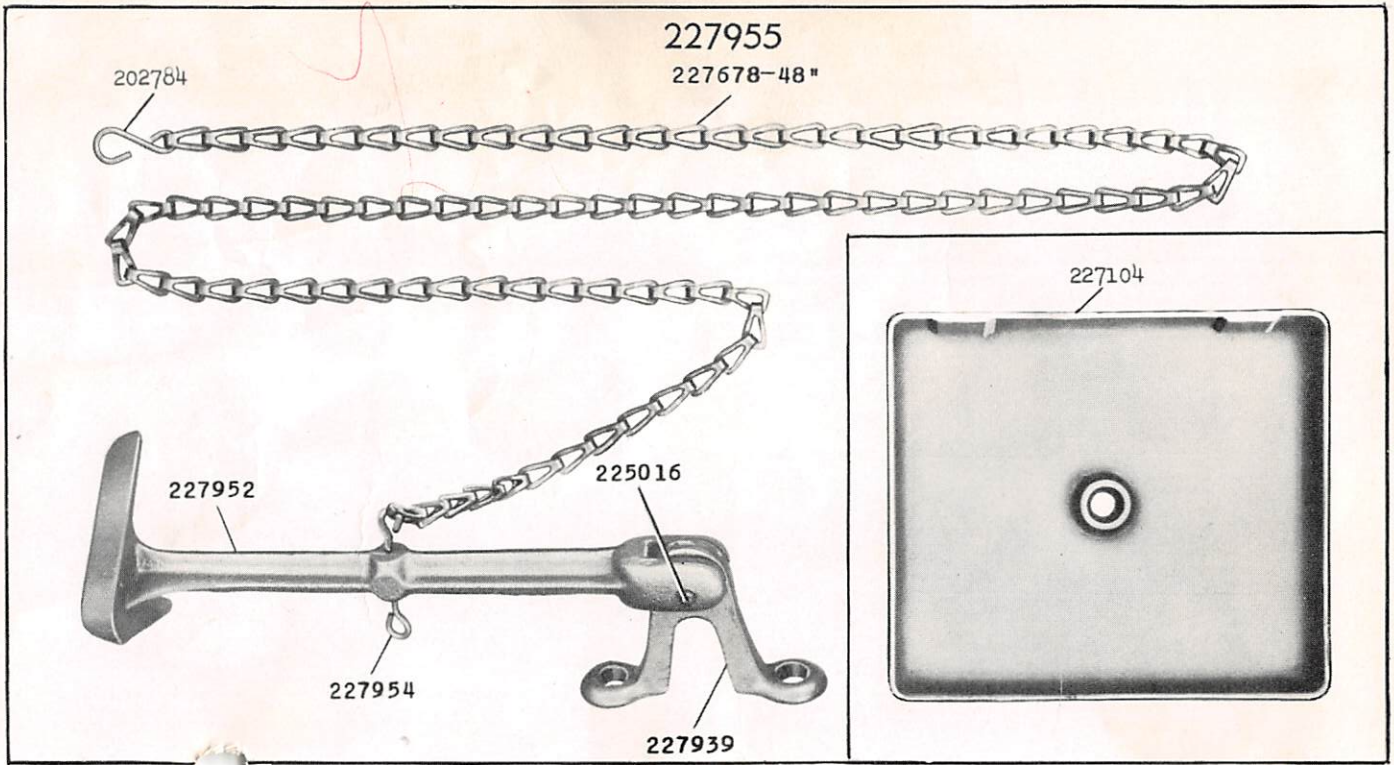

16762 - 3/8

From the library of: Superior Sewing Machine & Supply LLC

17002 - ½

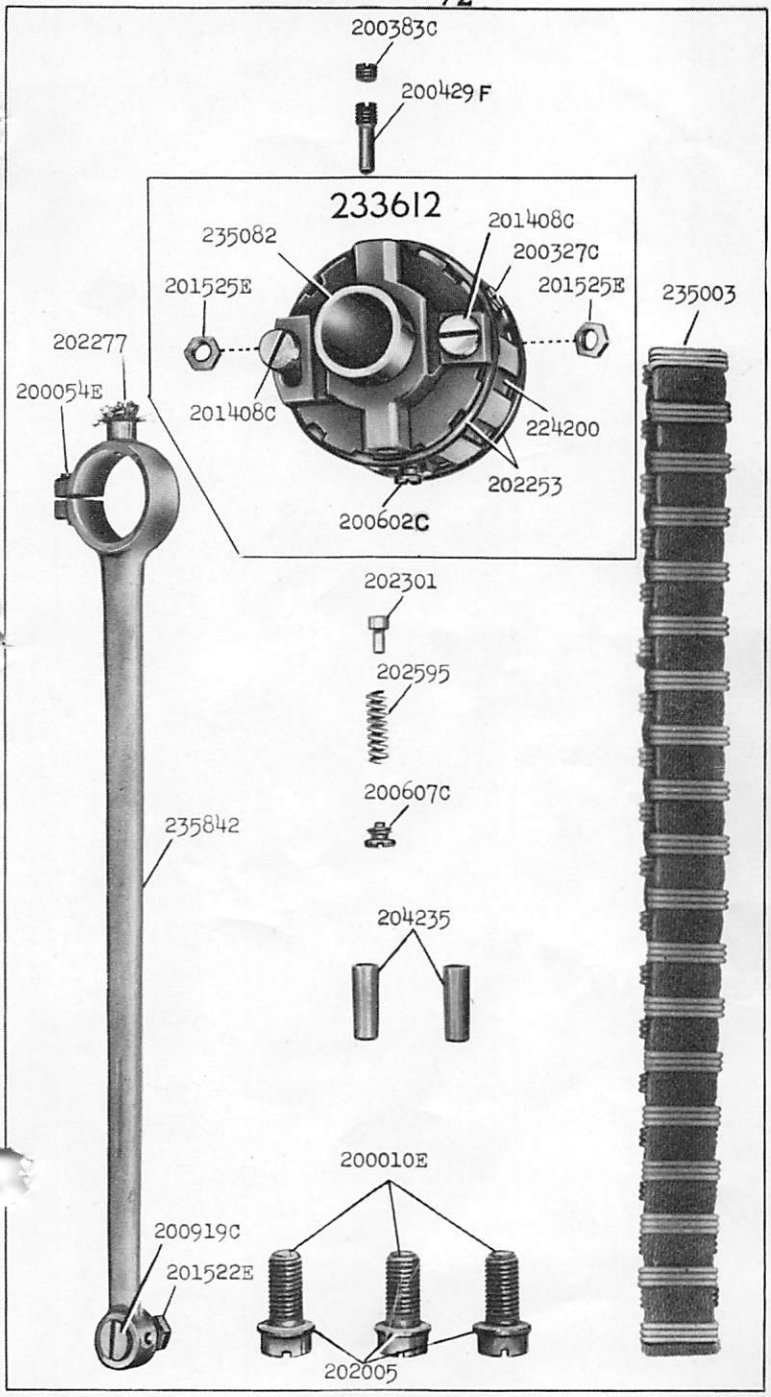

From the library of: Superior Sewing Machine & Supply LLC

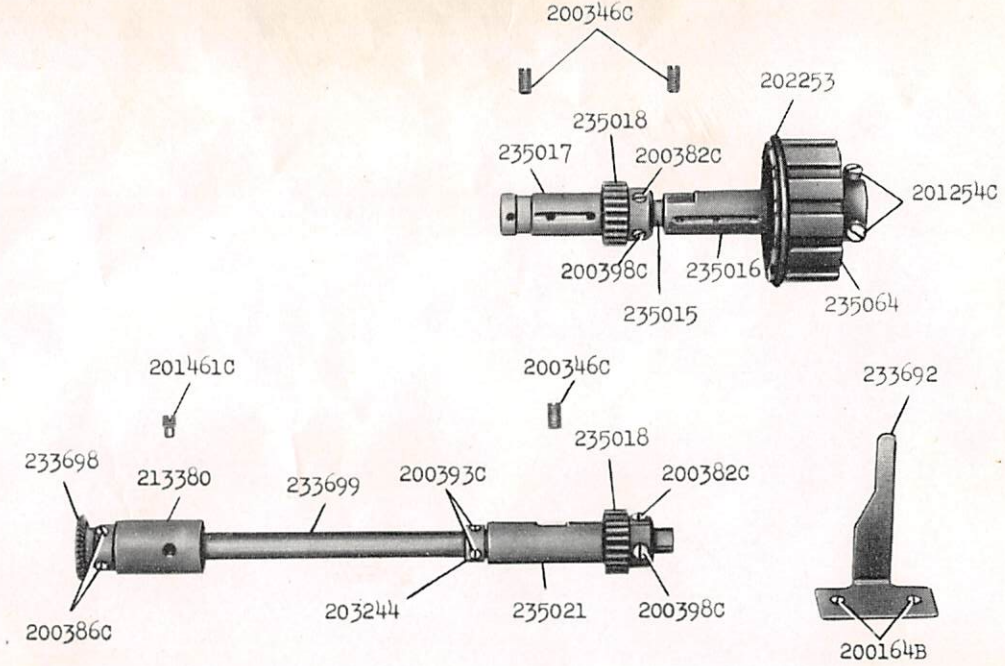

17003 - 1/3

From the library of: Superior Sewing Machine & Supply LLC

17007 - 1/2

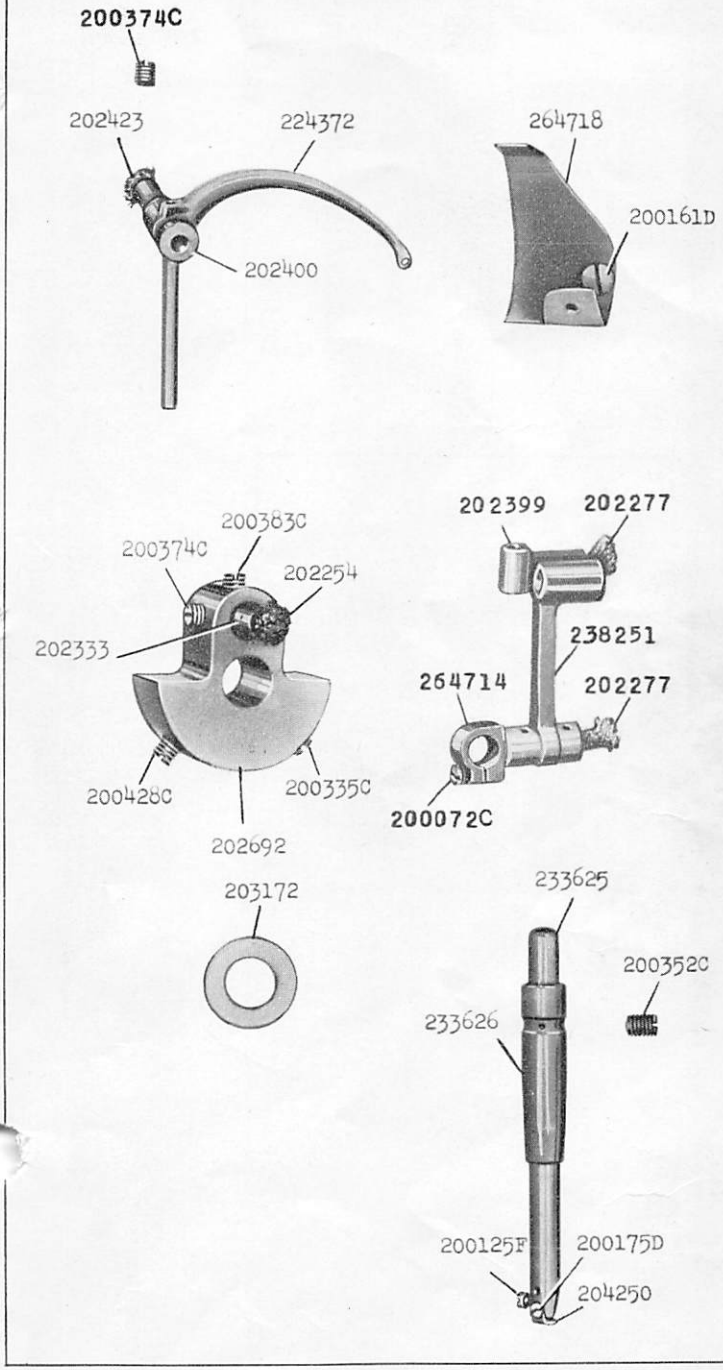

From the library of: Superior Sewing Machine & Supply LLC

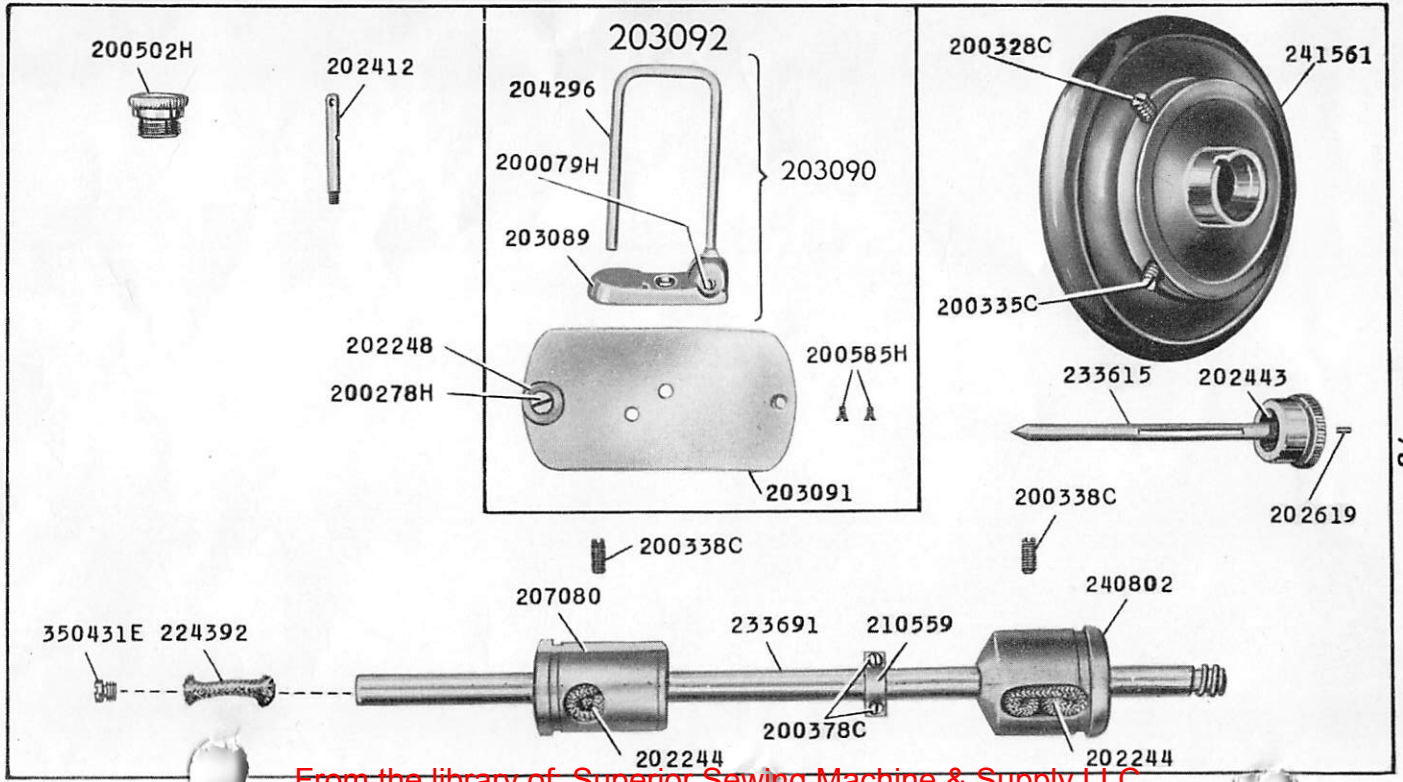

17030 - 1/3

From the library of: Superior Sewing Machine & Supply LLC

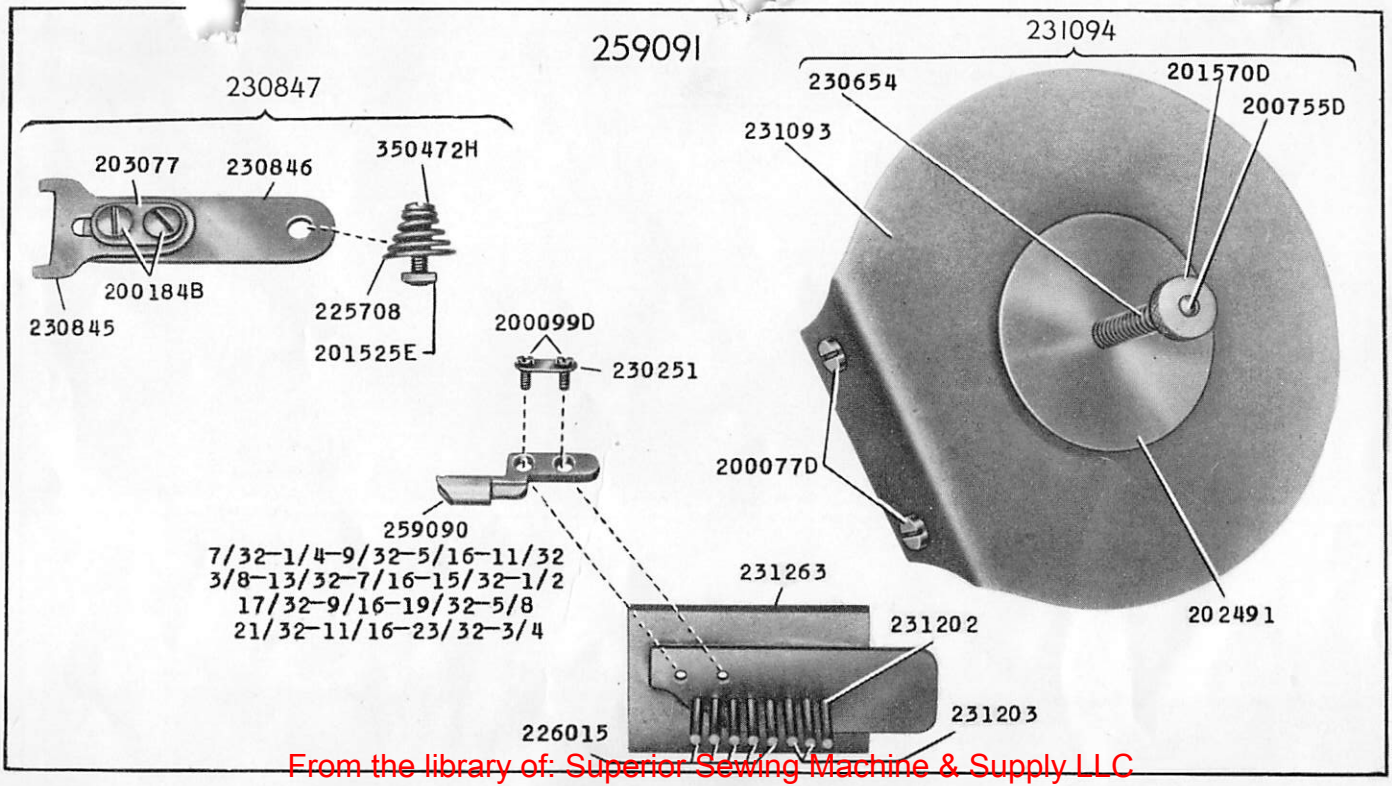

17042 - 1/2

From the library of: Superior Sewing Machine & Supply LLC

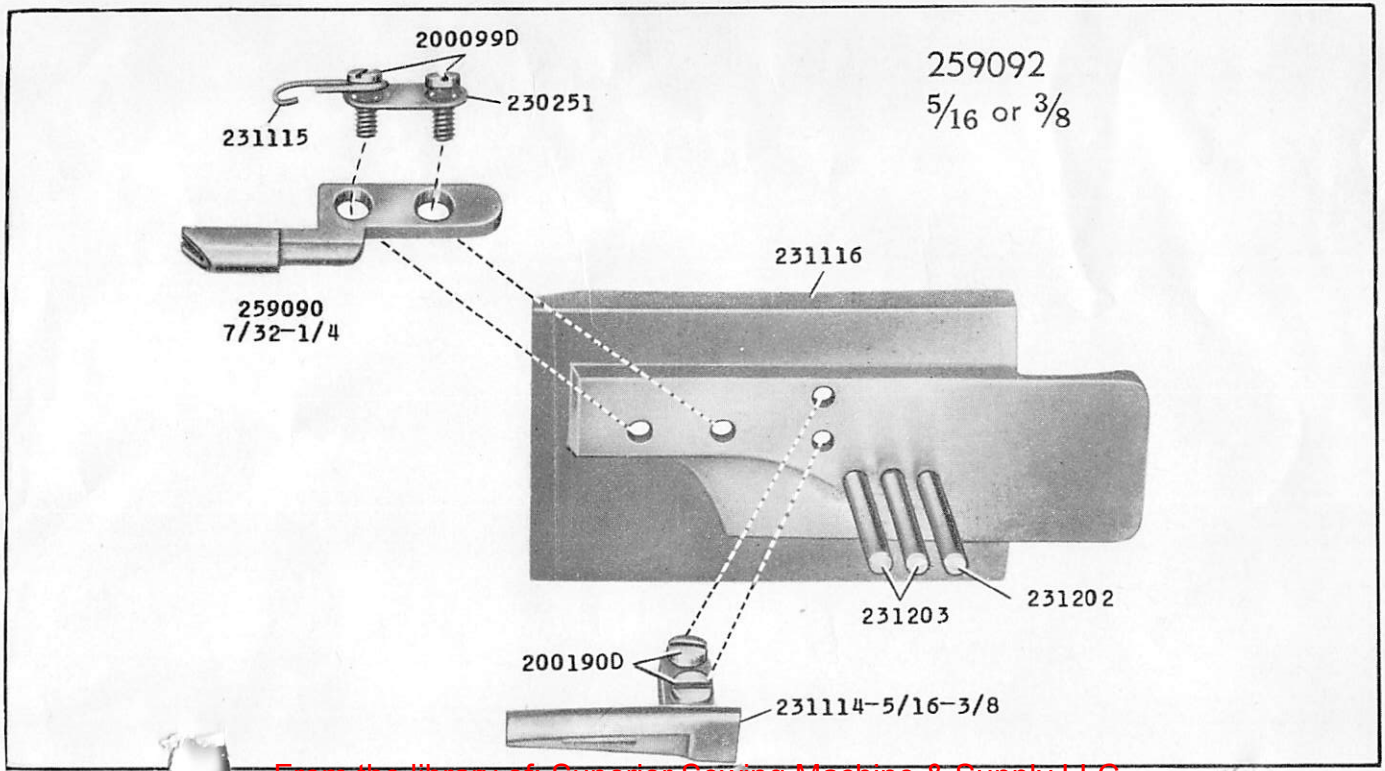

17043

From the library of: Superior Sewing Machine & Supply LLC

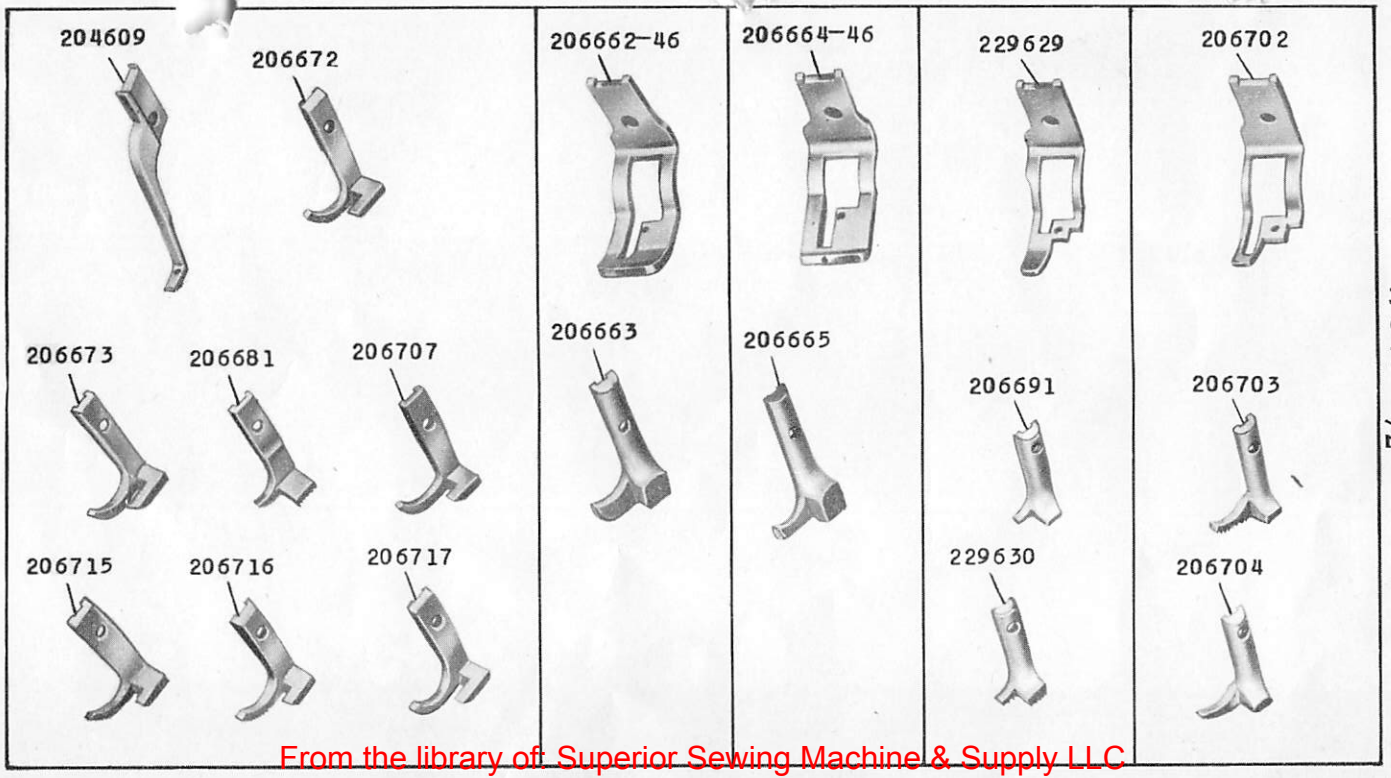

17046 - 1/2

From the library of Superior Sewing Machine & Supply LLC

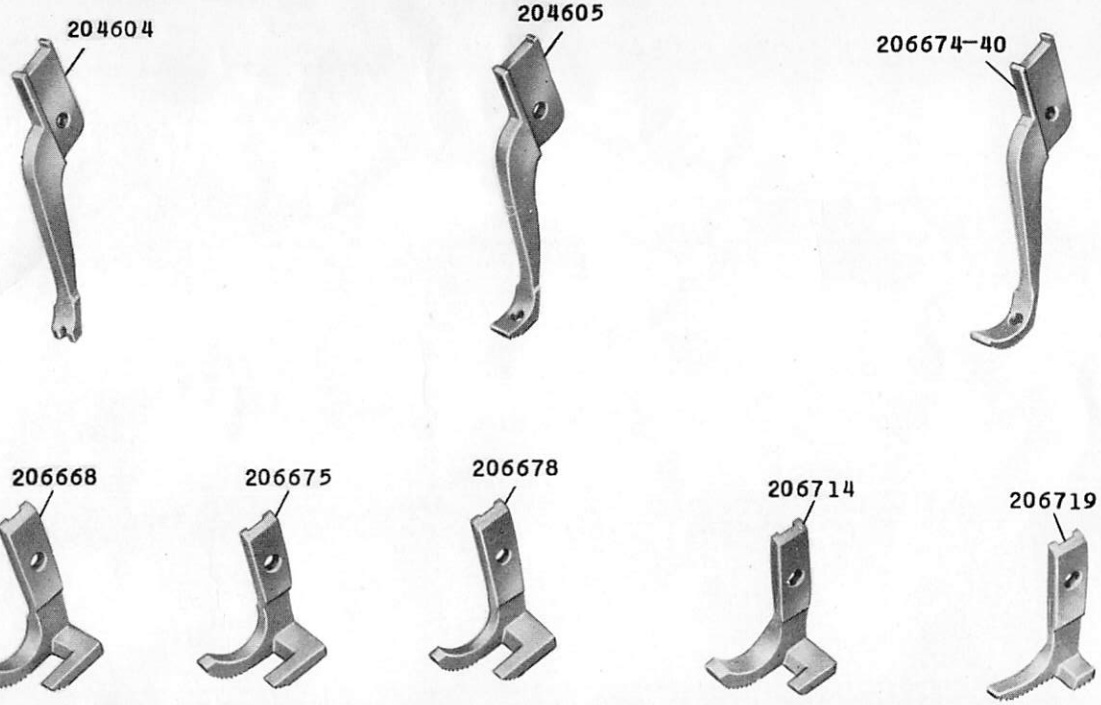

17047 - 2/3

From the library of: Superior Sewing Machine & Supply LLC

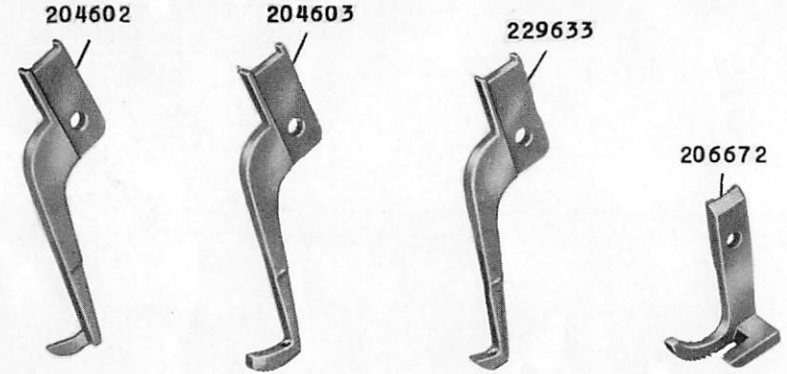

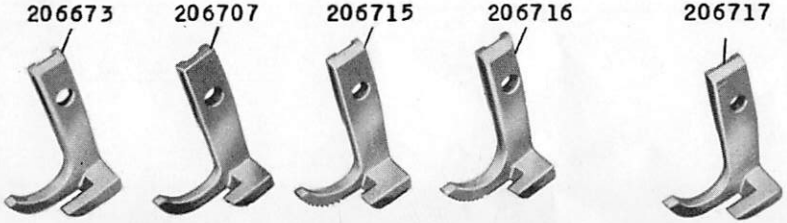

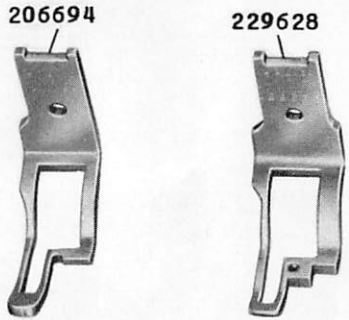

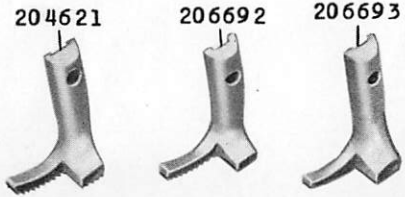

17048 - 2/3

From the library of: Superior Sewing Machine & Supply LLC

17050 - ½

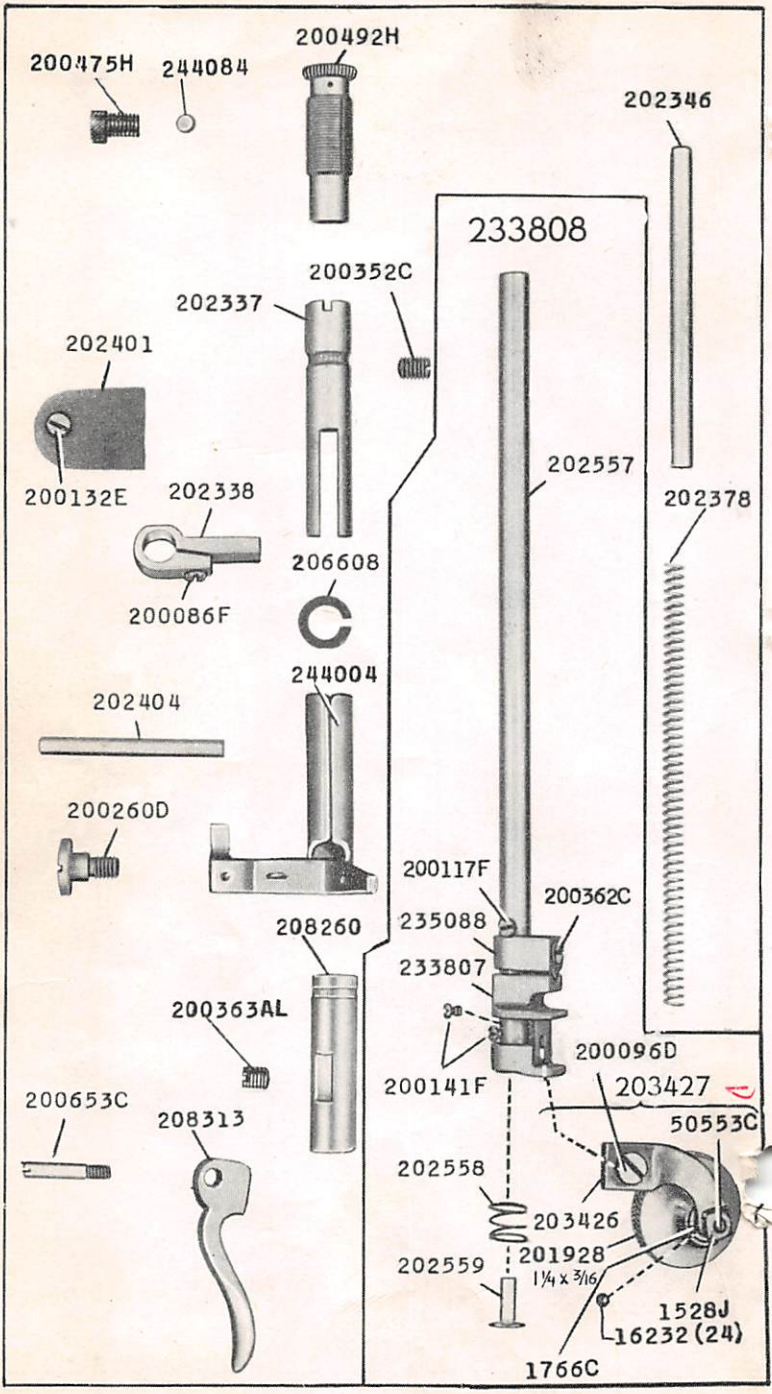

From the library of: Superior Sewing Machine & Supply LLC

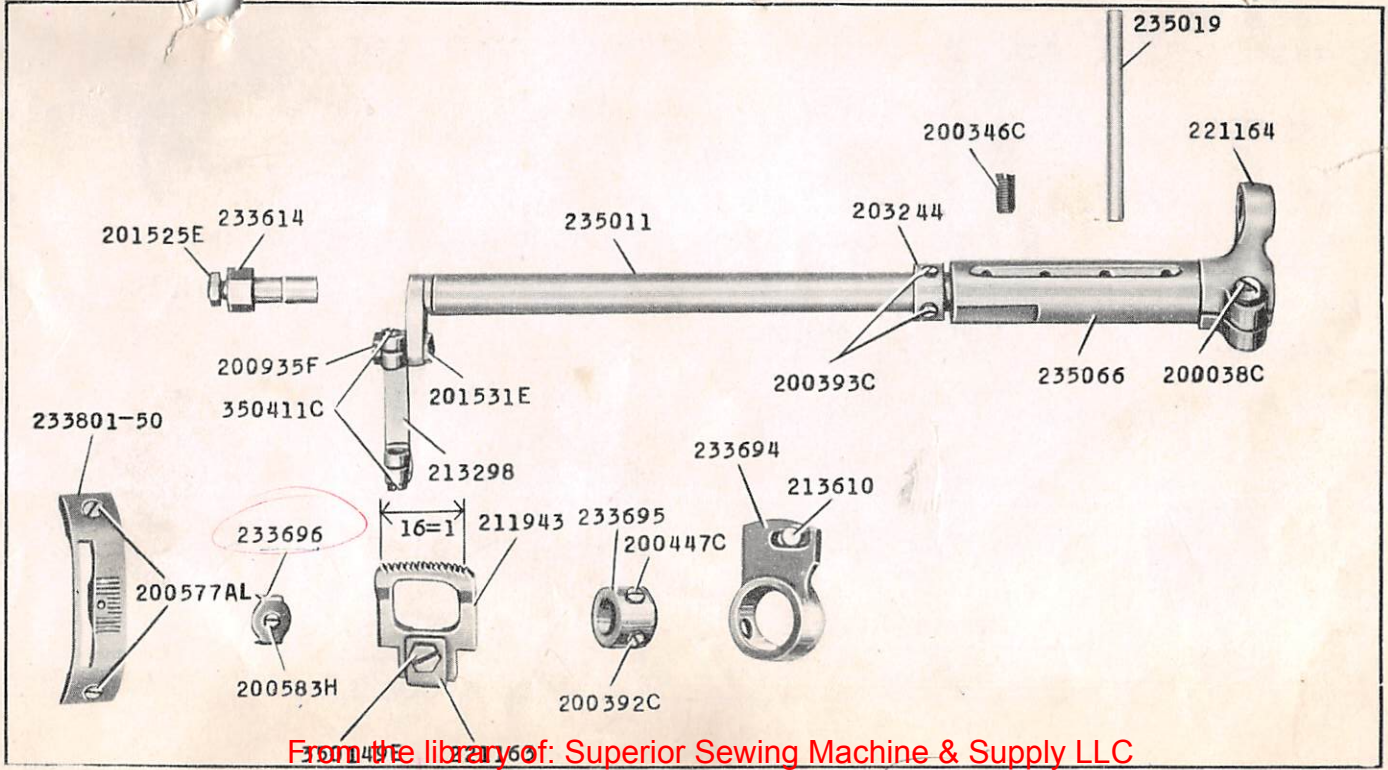

17051 - 1/2

From the library of: Superior Sewing Machine & Supply LLC

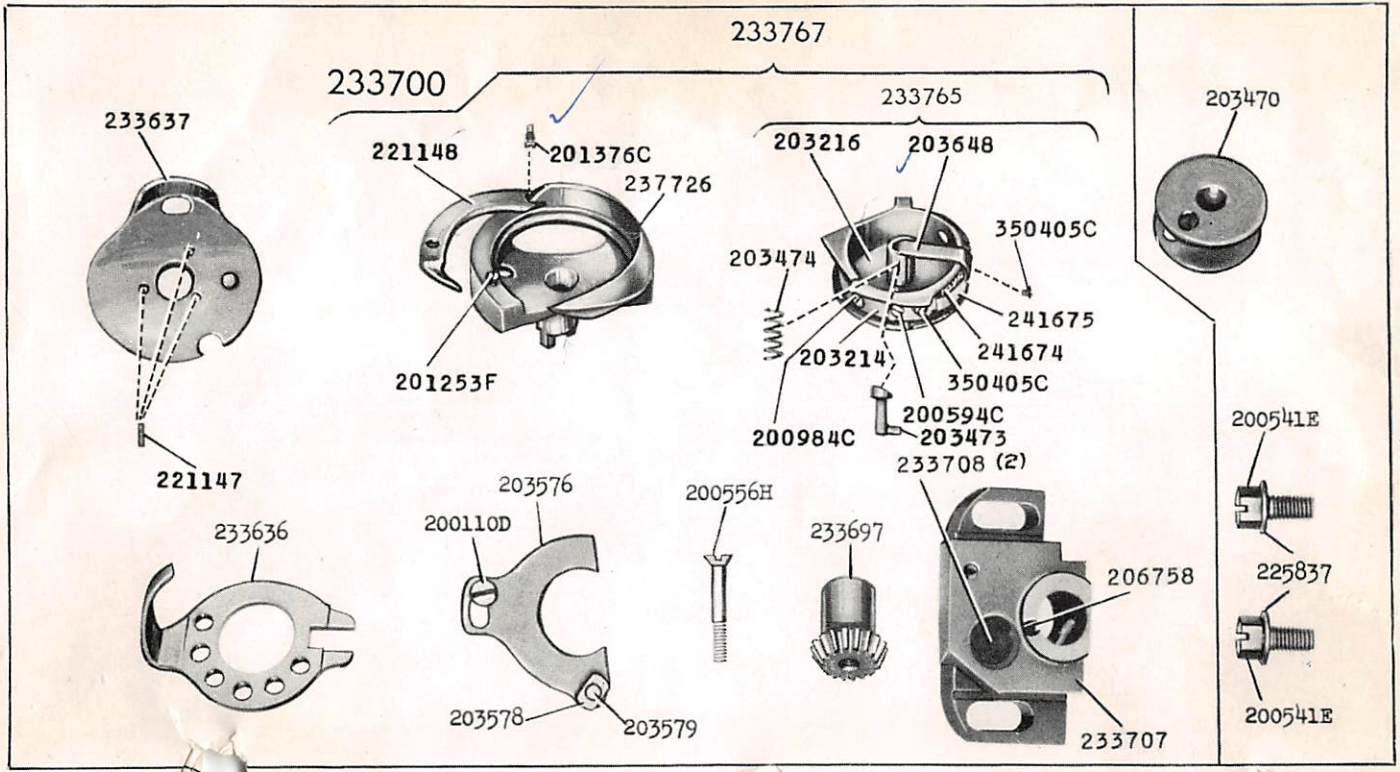

17052 - 2/3

From the library of: Superior Sewing Machine & Supply LLC

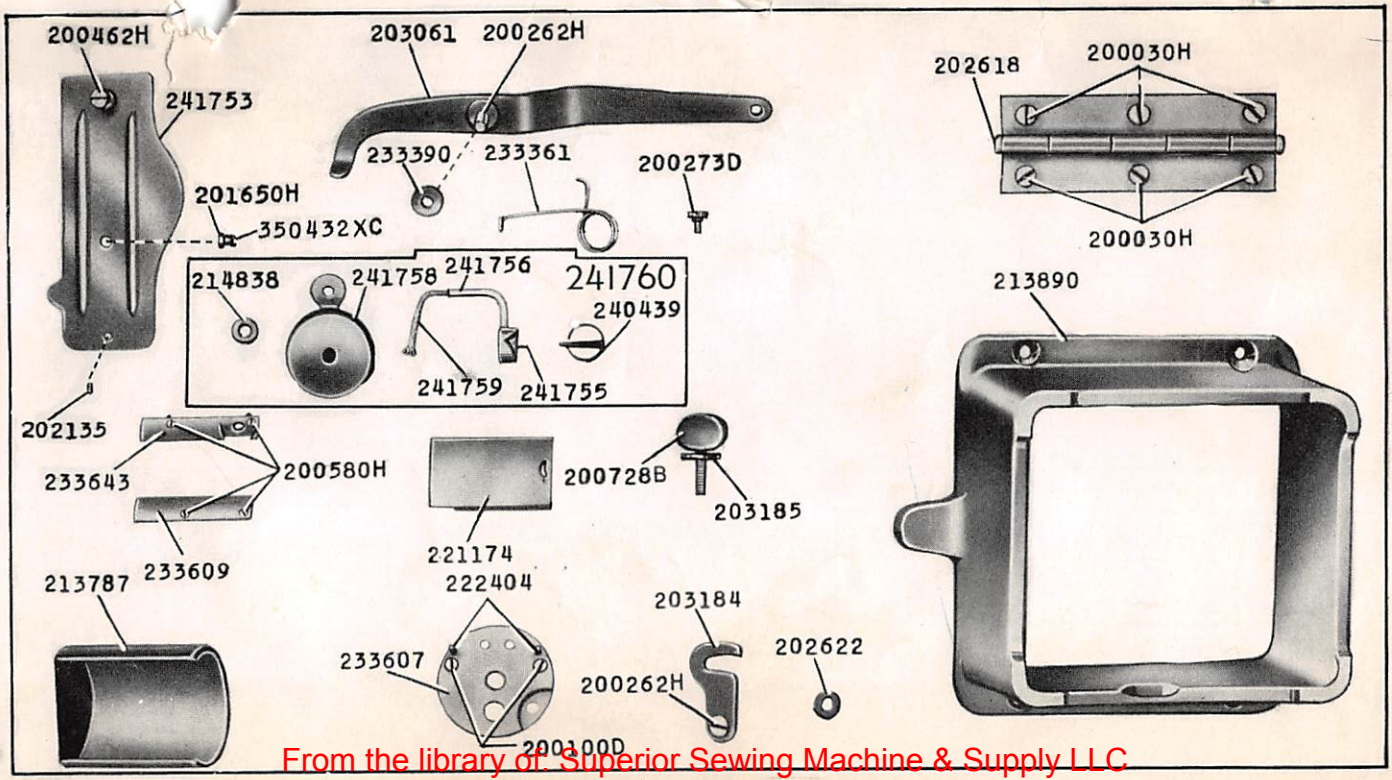

17053 - 1/4

From the library of: Superior Sewing Machine & Supply LLC

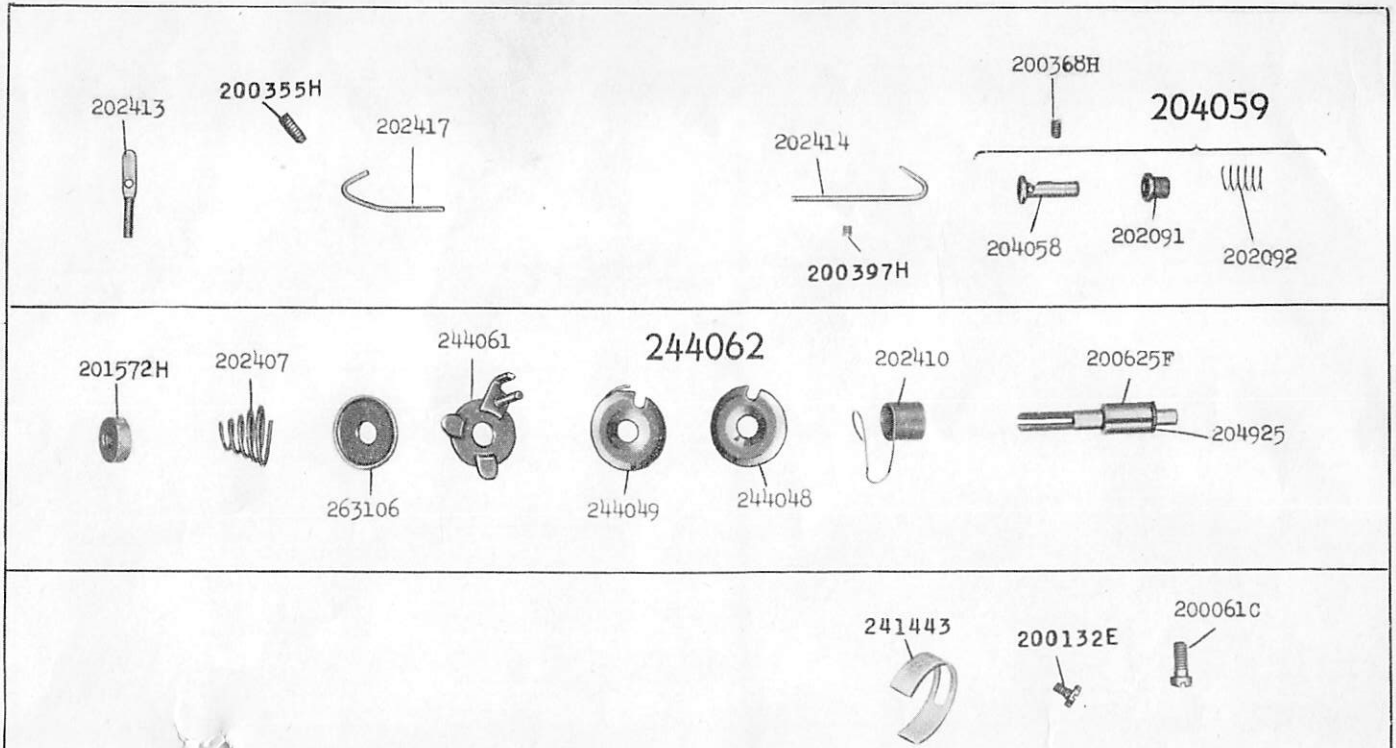

17054 - 1/2

From the library of: Superior Sewing Machine & Supply LLC

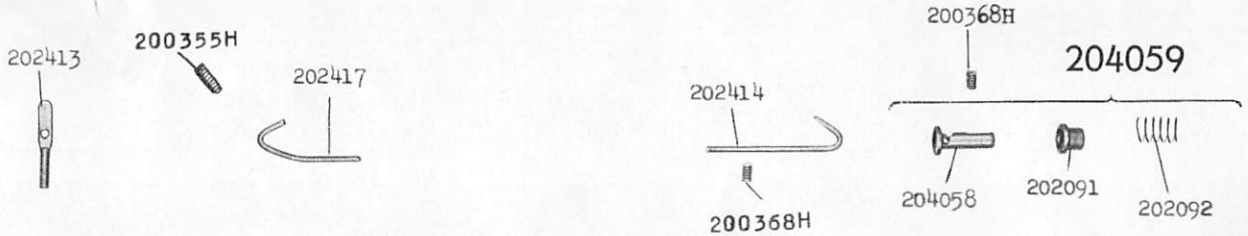

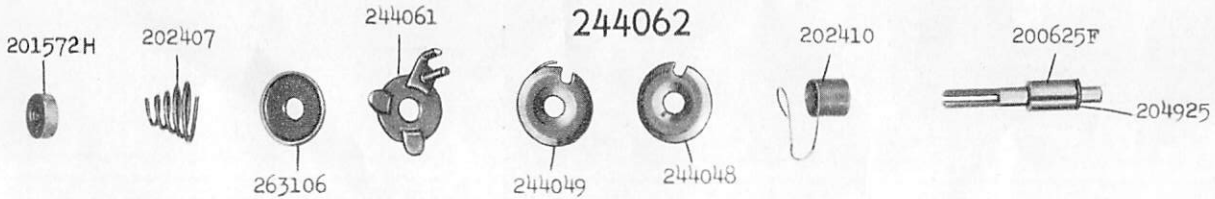

17055 - 1/2

From the library of: Superior Sewing Machine & Supply LLC

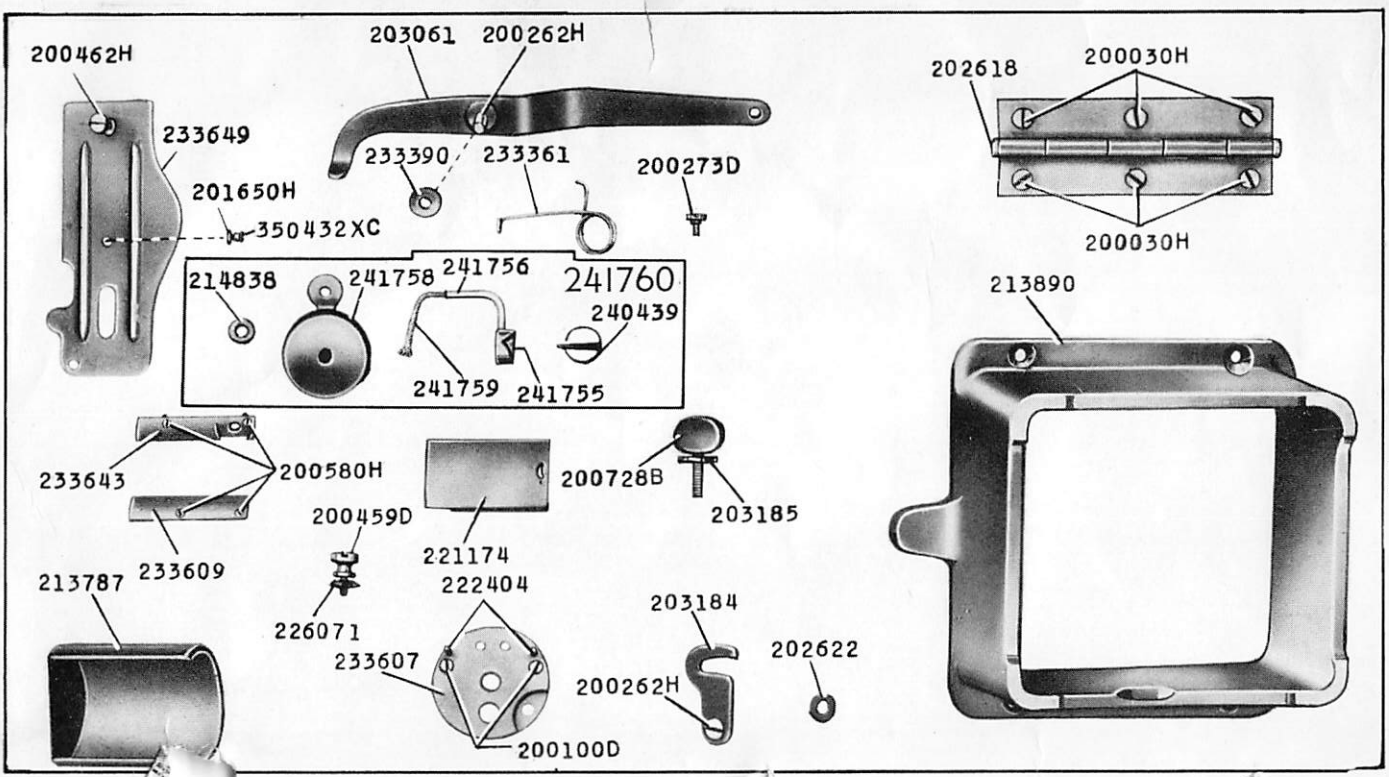

17056 - 1/4

From the library of: Superior Sewing Machine & Supply LLC

17057 - 5/8

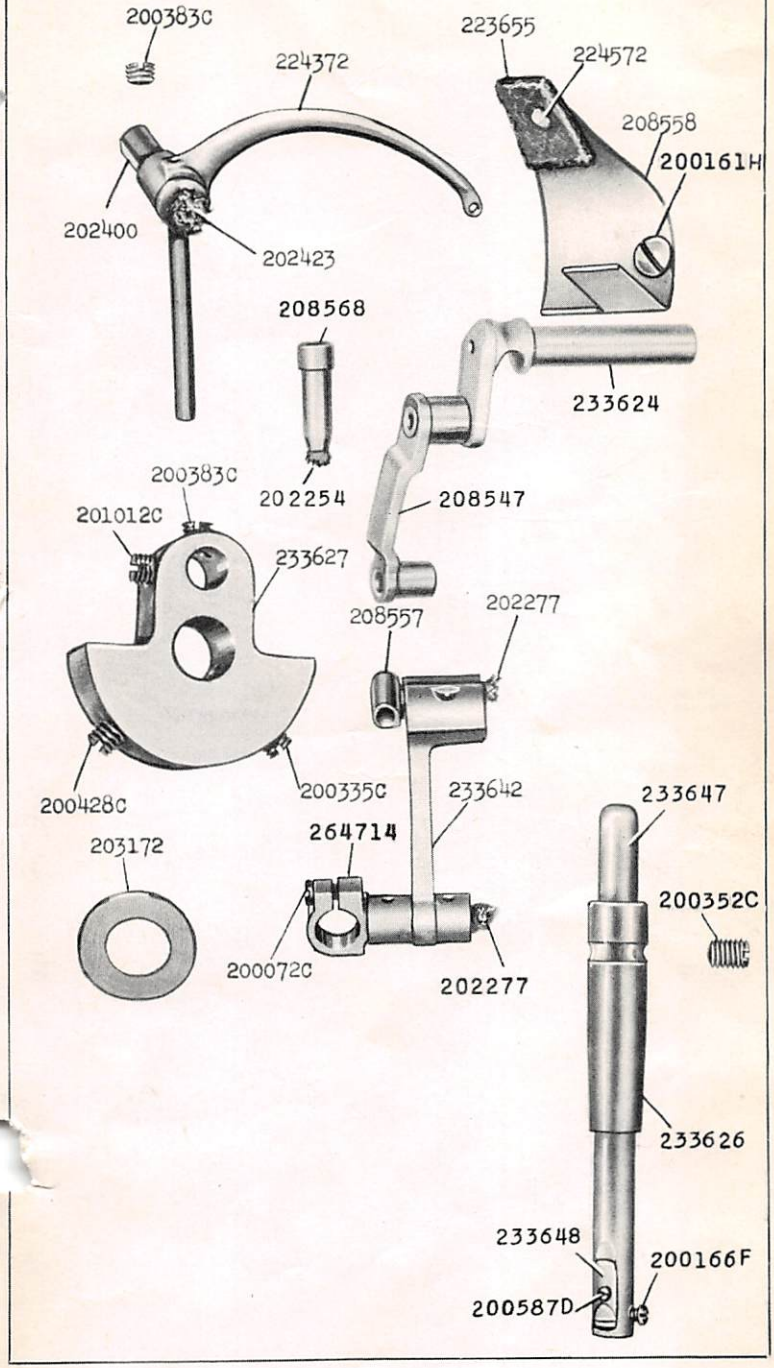

From the library of: Superior Sewing Machine & Supply LLC

17058 - ½

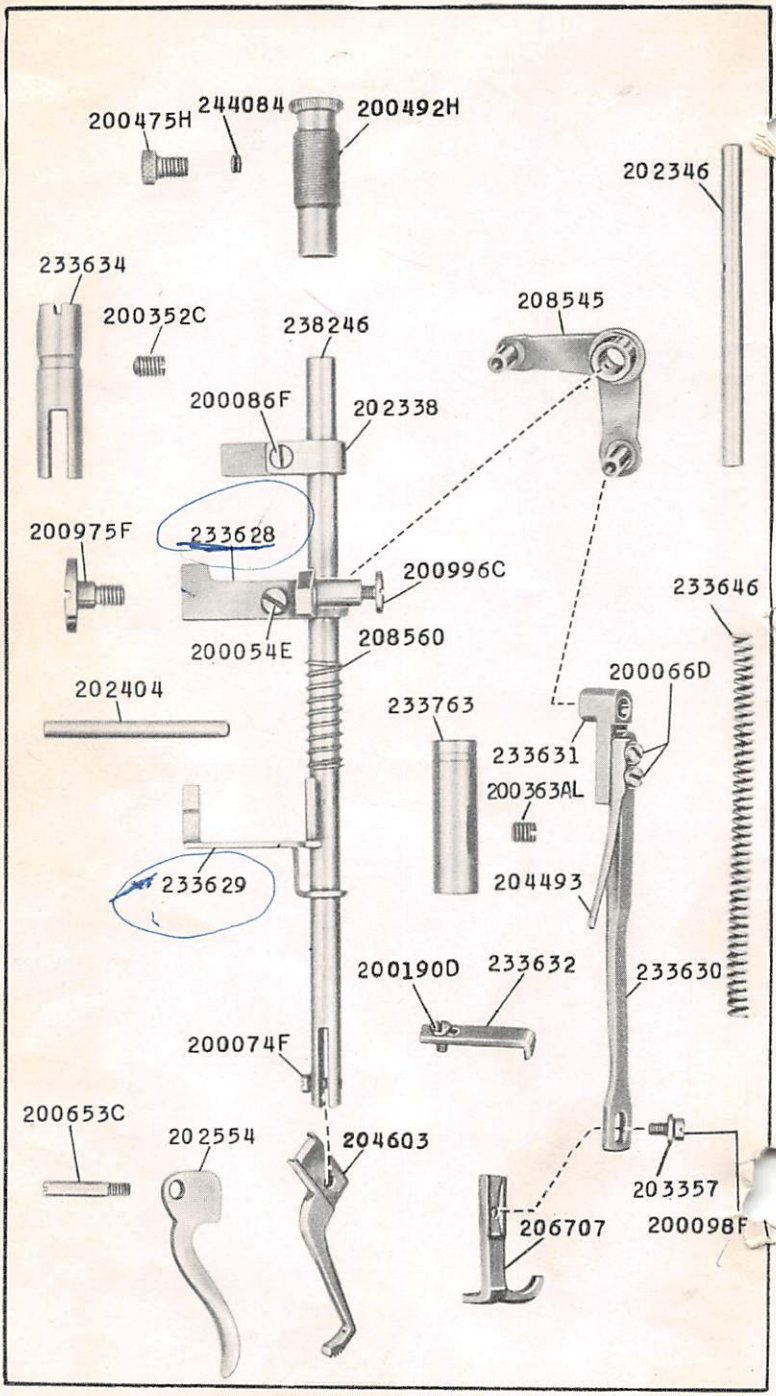

From the library of: Superior Sewing Machine & Supply LLC

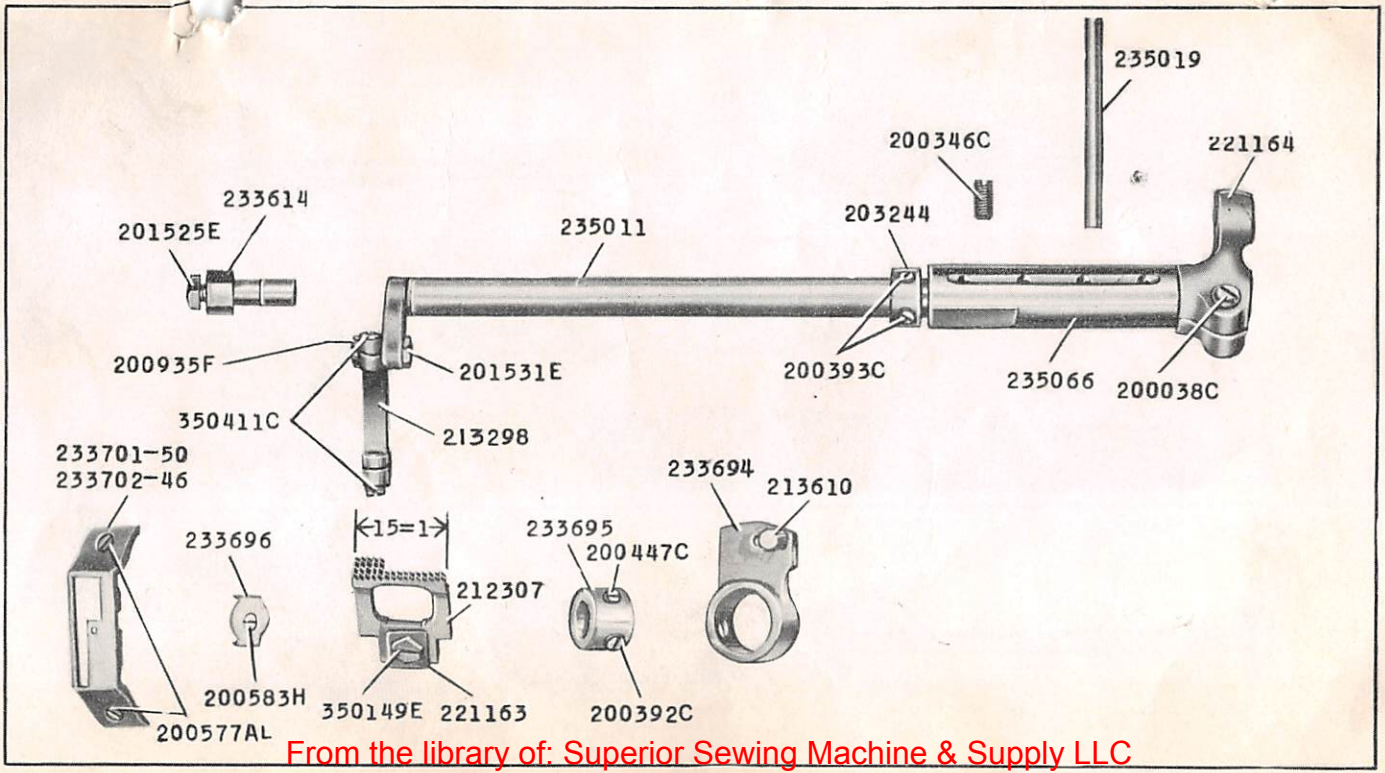

17059 - 1/2

From the library of: Superior Sewing Machine & Supply LLC

17060 - ½

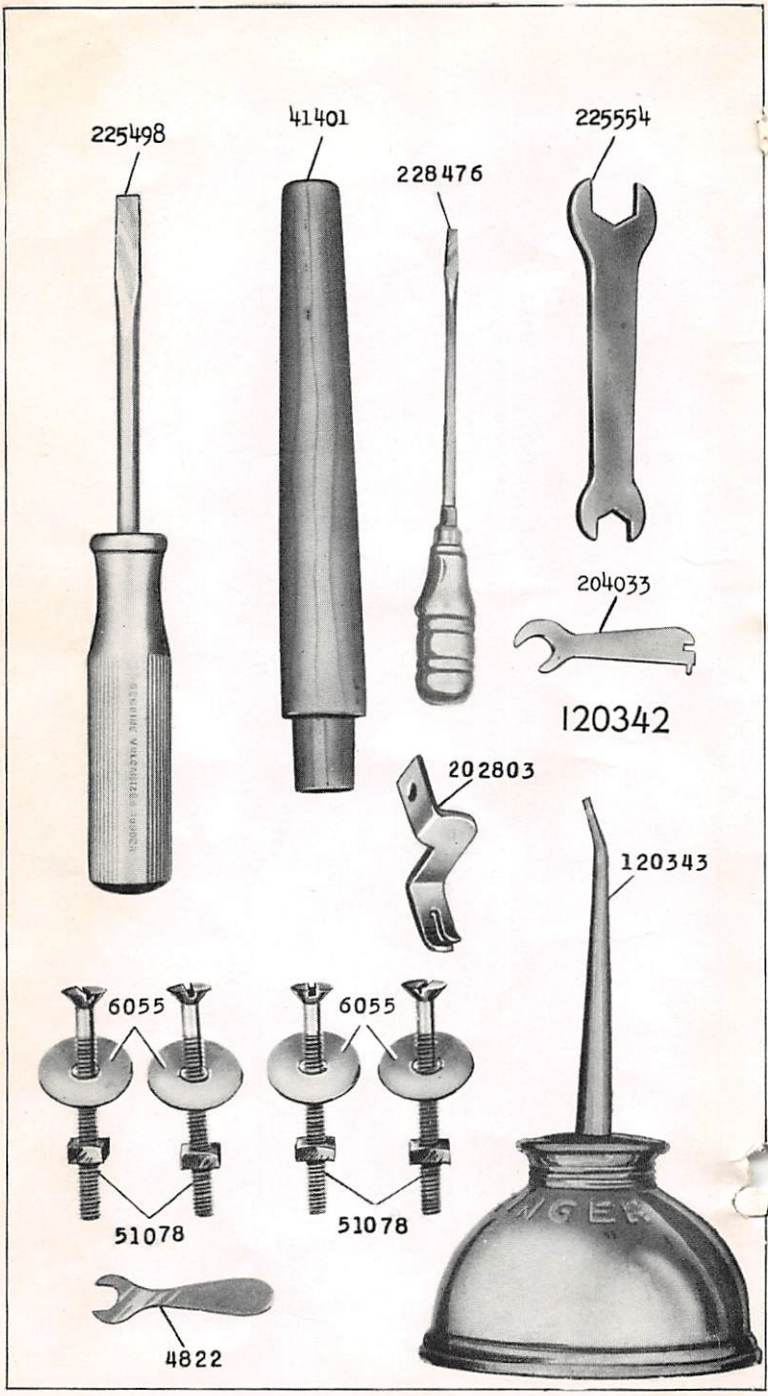

From the library of: Superior Sewing Machine & Supply LLC

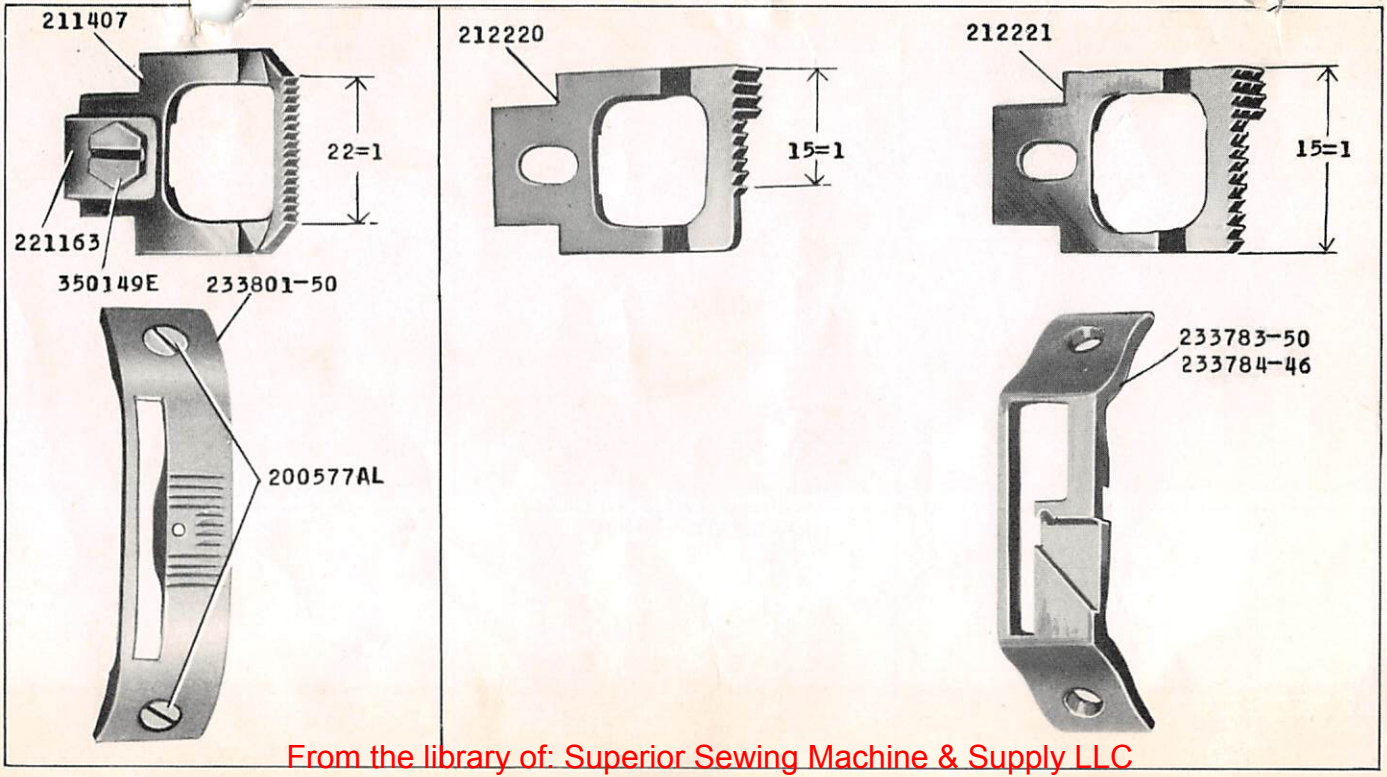

19071

From the library of: Superior Sewing Machine & Supply LLC

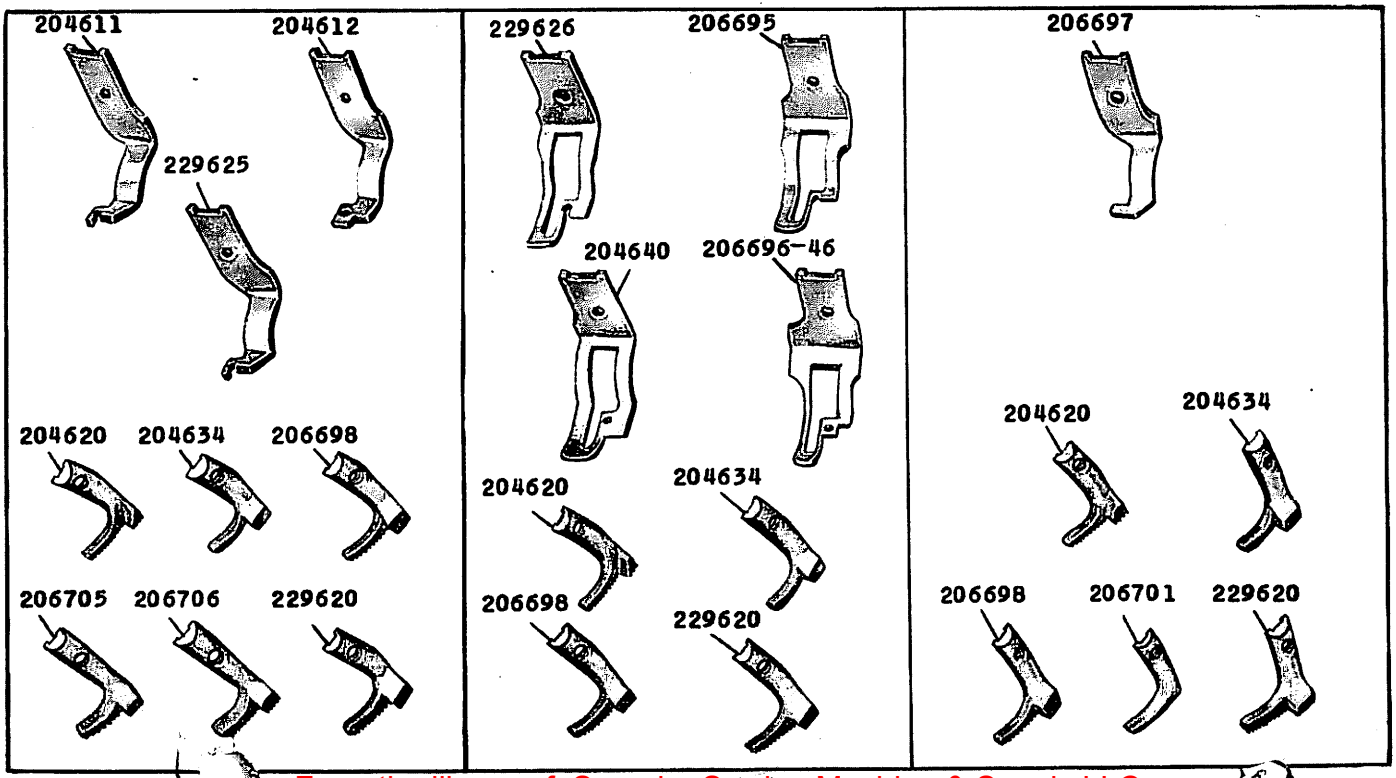

17062 - 1/2

From the library of: Superior Sewing Machine & Supply LLC

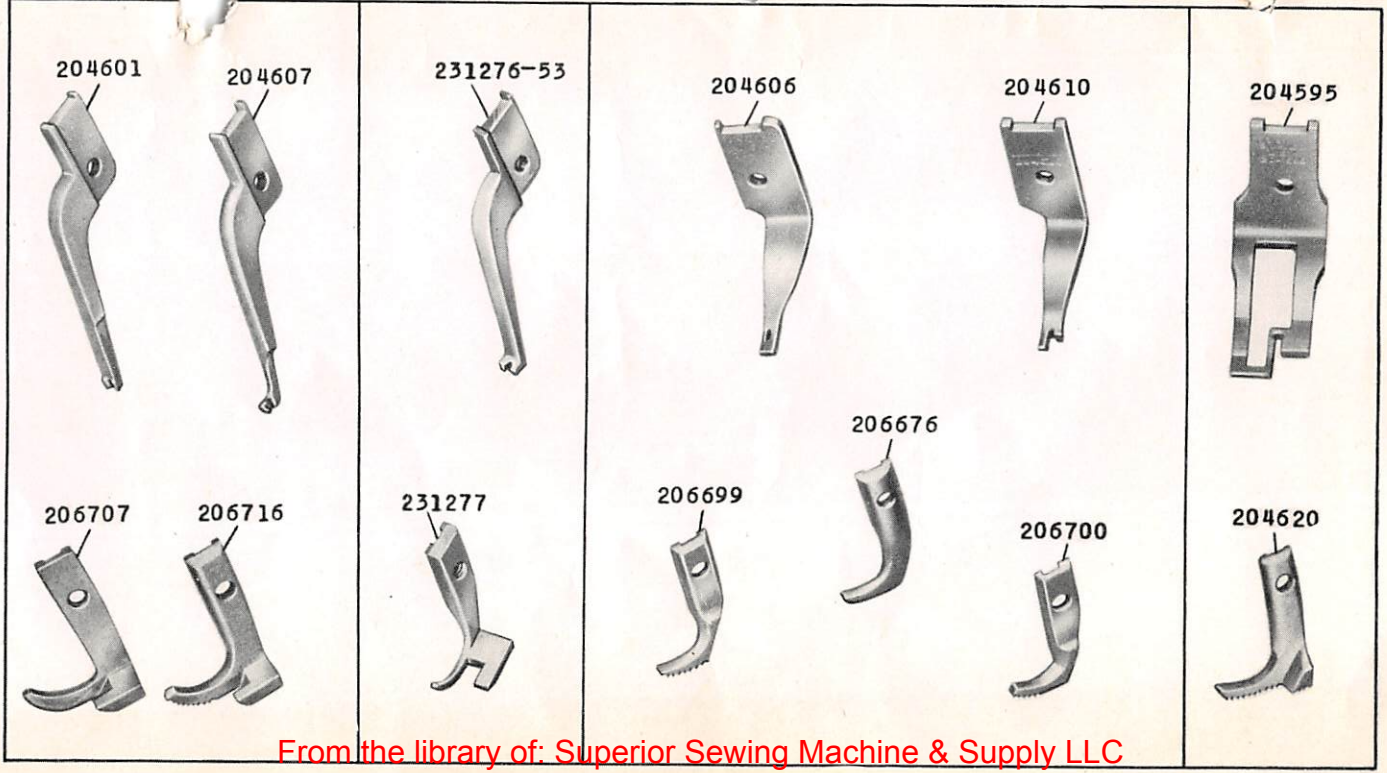

17063

From the library of: Superior Sewing Machine & Supply LLC

From the library of: Superior Sewing Machine & Supply LLC

From the library of: Superior Sewing Machine & Supply LLC

From the library of: Superior Sewing Machine & Supply LLC