S-7200C

INSTRUCTION MANUAL

Please read this manual before using the machine.
Please keep this manual within easy reach for quick reference.

SINGLE NEEDLE DIRECT DRIVE STRAIGHT LOCK STITCHER
WITH THREAD TRIMMER

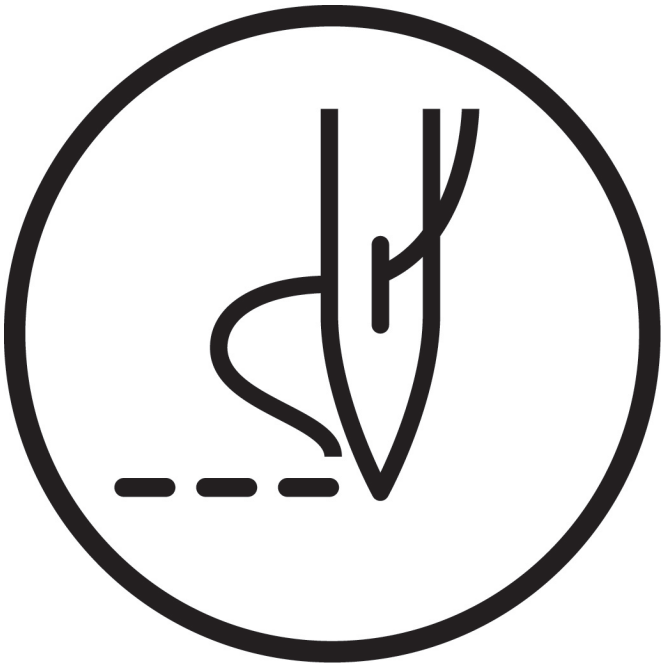

brother®

Thank you very much for buying a BROTHER sewing machine. Before using your new machine, please read the safety instructions and the explanations given in the instruction manual.

With industrial sewing machines, it is normal to carry out work while positioned directly in front of moving parts such as the needle and thread take-up, and consequently there is always a danger of injury that can be caused by these parts. Follow the instructions from training personnel and instructors regarding safe and correct operation before operating the machine so that you will know how to use it correctly.

SAFETY INSTRUCTIONS

[1] Safety indications and their meanings

This instruction manual and the indications and symbols that are used on the machine itself are provided in order to ensure safe operation of this machine and to prevent accidents and injury to yourself or other people.
The meanings of these indications and symbols are given below.

Indications

⚠ **DANGER**	The instructions which follow this term indicate situations where failure to follow the instructions will result in death or serious injury.
⚠ **CAUTION**	The instructions which follow this term indicate situations where failure to follow the instructions could cause injury when using the machine or physical damage to equipment and surroundings.

Symbols

. . . . .
This symbol (△) indicates something that you should be careful of. The picture inside the triangle indicates the nature of the caution that must be taken.
(For example, the symbol at left means “beware of injury”.)

. . . . .
This symbol (⃠) indicates something that you <u>must not</u> do.

. . . . .
This symbol (●) indicates something that you <u>must</u> do. The picture inside the circle indicates the nature of the thing that must be done.
(For example, the symbol at left means “you must make the ground connection”.)

[2] Notes on safety

DANGER

Wait at least 5 minutes after turning off the power switch and disconnecting the power cord from the wall outlet before opening the cover of the control box. Touching areas where high voltages are present can result in severe injury.

CAUTION

Environmental requirements

Use the sewing machine in an area which is free from sources of strong electrical noise such as electrical line noise or static electric noise.
Sources of strong electrical noise may cause problems with correct operation.

Any fluctuations in the power supply voltage should be within ±10% of the rated voltage for the machine.
Voltage fluctuations which are greater than this may cause problems with correct operation.

The power supply capacity should be greater than the requirements for the sewing machine's power consumption.
Insufficient power supply capacity may cause problems with correct operation.

The ambient temperature should be within the range of 5°C to 35°C during use.
Temperatures which are lower or higher than this may cause problems with correct operation.

The relative humidity should be within the range of 45% to 85% during use, and no dew formation should occur in any devices.
Excessively dry or humid environments and dew formation may cause problems with correct operation.

In the event of an electrical storm, turn off the power and disconnect the power cord from the wall outlet.
Lightning may cause problems with correct operation.

Installation

Machine installation should only be carried out by a qualified technician.

Contact your Brother dealer or a qualified electrician for any electrical work that may need to be done.

The sewing machine weighs more than 45 kg. The installation should be carried out by two or more people.

Do not connect the power cord until installation is complete. The machine may operate if the treadle is depressed by mistake, which could result in injury.

Turn off the power switch before inserting or removing the plug, otherwise damage to the control box could result.

Be sure to connect the ground. If the ground connection is not secure, you run a high risk of receiving a serious electric shock, and problems with correct operation may also occur.

When securing the cords, do not bend the cords excessively or fasten them too hard with staples, otherwise there is the danger that fire or electric shocks could occur.

If using a work table which has casters, the casters should be secured in such a way so that they cannot move.

Secure the table so that it will not move when tilting back the machine head. If the table moves, it may crush your feet or cause other injuries.

Use both hands to hold the machine head when tilting it back or returning it to its original position. If only one hand is used, the weight of the machine head may cause your hand to slip, and your hand may get caught.

Be sure to wear protective goggles and gloves when handling the lubricating oil and grease, so that they do not get into your eyes or onto your skin, otherwise inflammation can result.
Furthermore, do not drink the oil or eat the grease under any circumstances, as they can cause vomiting and diarrhea.
Keep the oil out of the reach of children.

⚠ CAUTION

Sewing

This sewing machine should only be used by operators who have received the necessary training in safe use beforehand.

The sewing machine should not be used for any applications other than sewing.

Be sure to wear protective goggles when using the machine.
If goggles are not worn, there is the danger that if a needle breaks, parts of the broken needle may enter your eyes and injury may result.

Turn off the power switch at the following times.
The machine may operate if the treadle is depressed by mistake, which could result in injury.

- When threading the needle
- When replacing the bobbin and needle
- When not using the machine and when leaving the machine unattended

If using a work table which has casters, the casters should be secured in such a way so that they cannot move.

Attach all safety devices before using the sewing machine. If the machine is used without these devices attached, injury may result.

Do not touch any of the moving parts or press any objects against the machine while sewing, as this may result in personal injury or damage to the machine.

Secure the table so that it will not move when tilting back the machine head. If the table moves, it may crush your feet or cause other injuries.

Use both hands to hold the machine head when tilting it back or returning it to its original position. If only one hand is used, the weight of the machine head may cause your hand to slip, and your hand may get caught.

If an error occurs in machine operation, or if abnormal noises or smells are noticed, immediately turn off the power switch. Then contact your nearest Brother dealer or a qualified technician.

If the machine develops a problem, contact your nearest Brother dealer or a qualified technician.

Cleaning

Turn off the power switch before carrying out cleaning. The machine may operate if the treadle is depressed by mistake, which could result in injury.

Secure the table so that it will not move when tilting back the machine head. If the table moves, it may crush your feet or cause other injuries.

Use both hands to hold the machine head when tilting it back or returning it to its original position. If only one hand is used, the weight of the machine head may cause your hand to slip, and your hand may get caught.

Be sure to wear protective goggles and gloves when handling the lubricating oil and grease, so that they do not get into your eyes or onto your skin, otherwise inflammation can result.
Furthermore, do not drink the oil or eat the grease under any circumstances, as they can cause vomiting and diarrhea.
Keep the oil out of the reach of children.

Use only the proper replacement parts as specified by Brother.

Maintenance and inspection

Maintenance and inspection of the sewing machine should only be carried out by a qualified technician.

Ask your Brother dealer or a qualified electrician to carry out any maintenance and inspection of the electrical system.

Turn off the power switch and disconnect the power cord from the wall outlet at the following times, otherwise the machine may operate if the treadle is depressed by mistake, which could result in injury.

- When carrying out inspection, adjustment and maintenance
- When replacing consumable parts such as the rotary hook

If the power switch needs to be left on when carrying out some adjustment, be extremely careful to observe all safety precautions.

Secure the table so that it will not move when tilting back the machine head. If the table moves, it may crush your feet or cause other injuries.

Use both hands to hold the machine head when tilting it back or returning it to its original position.
If only one hand is used, the weight of the machine head may cause your hand to slip, and your hand may get caught.

Use only the proper replacement parts as specified by Brother.

If any safety devices have been removed, be absolutely sure to re-install them to their original positions and check that they operate correctly before using the machine.

Any problems in machine operation which result from unauthorized modifications to the machine will not be covered by the warranty.

[3] Warning labels

The following warning labels appear on the sewing machine.
Please follow the instructions on the labels at all times when using the machine. If the labels have been removed or are difficult to read, please contact your nearest Brother dealer.

1

	⚠ 危 険		⚠ 危 险
	高電圧部分にふれて、大けがをすることがある。 電源を切り、5分たってからカバーをはずすこと。		触摸高压电部分，会导致受伤。 在切断电源5分钟后，再开启盖罩。
⚠ DANGER	⚠ GEFAHR	⚠ DANGER	⚠ PELIGRO
Hazardous voltage will cause injury.Turn off main switch and wait 5minutes before opening this cover.	Hochspannung verletzungsgefahr! Bitte schalten sie den hauptschalter aus und warten sie 5 minuten, bevor sie diese abdeckung öffnen.	Un voltage non adapte provoque des blessures.Eteindre l'interrupteur et attendre 5 minutes avantd'ouvrir le capot.	Un voltaje inadecuado puede provocar las heridas.Apagar el interruptor principal y esperar 5 minutos antes de abrir esta cubierta.

2 Touching areas where high voltages are present can result in severe injury. Turn off the power before opening the cover.

3

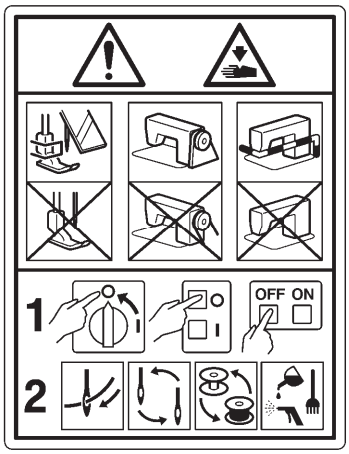

CAUTION
Moving parts may cause injury.

Operate with safety devices* installed.

Turn off the power before carrying out operations such as threading, changing the needle, bobbin, knives or hook, cleaning and adjusting.

4 Be careful not to get your hands caught when returning the machine head to its original position after it has been tilted.

5 Be careful to avoid injury from the moving thread take-up.

6 Be sure to connect the ground. If the ground connection is not secure, you run a high risk of receiving a serious electric shock, and problems with correct operation may also occur.

7 Direction of operation

* Safety devices: (A) Finger guard
(B) Thread take-up cover

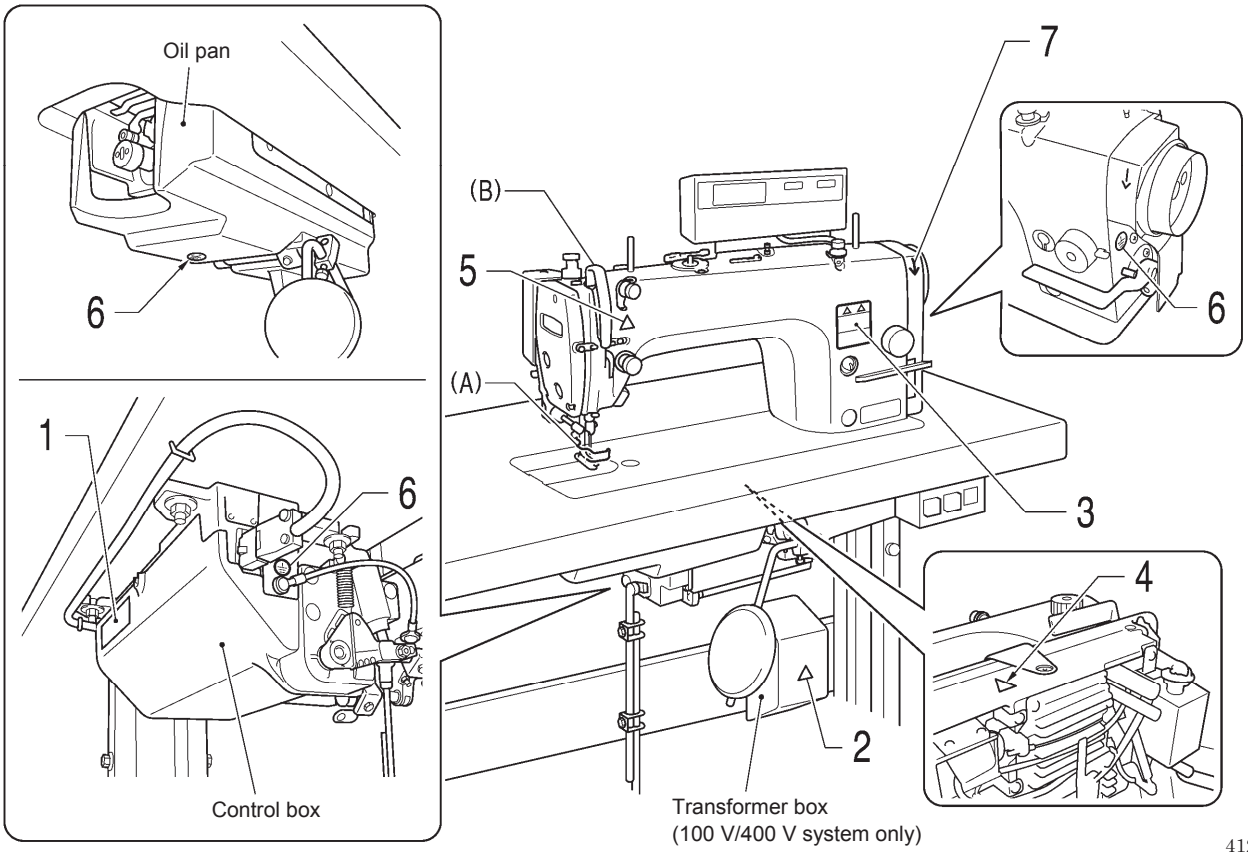

4123M

CONTENTS

1. MACHINE SPECIFICATIONS 1

2. NAMES OF MAJOR PARTS 2

3. INSTALLATION 3

3-1. Table processing diagram 4
3-2. Installation 4
3-3. Lubrication (-[]0[], []3[] specifications)..... 8
3-4. Connecting the cords..... 9
3-4-1. Opening the control box cover 9
3-4-2. Connecting the cords 9
3-5. Test operation (Operating the treadle) 14

4. PREPARATION BEFORE SEWING 15

4-1. Installing the needle..... 15
4-2. Removing the bobbin case 15
4-3. Winding the lower thread..... 16
4-4. Installing the bobbin case 16
4-5. Threading the upper thread 17
4-6. Adjusting the stitch length..... 18
4-7. Using the thread wiper (-4[][] specifications) ... 18
4-8. Using the knee lifter 18

5. USING THE G50 OPERATION PANEL (BASIC OPERATIONS)..... 19

5-1. Names and functions..... 19
5-2. Sewing start and end backtack stitches 21
5-3. Sewing continuous backtack stitches..... 22
5-4. Sewing fixed stitches 23
5-5. Sewing name labels 24
5-6. Sewing pleat presser stitches..... 25
5-7. Using the lower thread counter 26

6. USING THE G50 OPERATION PANEL (ADVANCED OPERATIONS) 27

6-1. Names and functions..... 27
6-2. Adjusting the needle up stop position..... 28
6-3. LOCK key 29
6-4. Resetting all settings to their defaults..... 30

7. USING THE G10 OPERATION PANEL (BASIC OPERATIONS)..... 31

7-1. Names and functions..... 31
7-2. Sewing start and end backtack stitches 32
7-3. Sewing continuous backtack stitches..... 33

8. USING THE G10 OPERATION PANEL (ADVANCED OPERATIONS) 34

8-1. Changing the needle stop position 34
8-2. Slow start..... 35
8-3. Correction sewing..... 36
8-4. Thread trimming lock 37
8-5. Setting the maximum sewing speed 38
8-6. Adjusting the needle up stop position 39
8-7. Lock function 40
8-8. Resetting all settings to their defaults 40

9. SEWING.....41

9-1. Sewing 41
9-2. Backtacking.....41
9-3. Sewing condensed stitches 42

10. THREAD TENSION.....43

10-1. Adjusting the thread tension 43
10-2. Adjusting the presser foot pressure 44
10-3. Adjusting the trailing length after thread trimming 44
10-4. Adjusting the thread take-up amount (-[][]3 specifications).....45

11. CLEANING.....46

11-1. Daily cleaning procedures.....46
11-2. Applying grease (-[]3[], []5[] specifications*) [When "GrEASEUP" appears…When using the G50 operation panel] 49
11-3. Applying grease (-[]3[], []5[] specifications*) [When "GrUP" appears ... When using the G10 operation panel] 51

12. ADJUSTING THE ROTARY HOOK LUBRICATION AMOUNT (-[]0[], []3[] specifications).....53

13. STANDARD ADJUSTMENTS 54

13-1. Adjusting the actuator switch position.....54
13-2. Adjusting the safety switch position 55
13-3. Adjusting the thread take-up spring 56
13-4. Adjusting arm thread guide R 57
13-5. Adjusting the presser foot height 57
13-6. Adjusting of the feed dog height 58
13-7. Adjusting the feed dog angle 59
13-8. Adjusting the needle bar height 60
13-9. Adjusting the needle and feed mechanism timing 60
13-10. Adjusting the needle and rotary hook timing.....61
13-11. Adjusting the treadle 62
13-12. Adjusting the presser foot floating amount (minute lifting amount) 62

14. TROUBLESHOOTING 63

14-1. Sewing 63
14-2. Error code displays 68

15. 7-SEGMENT DISPLAY 72

1. MACHINE SPECIFICATIONS

	3	4
Quick reverse	O	O
Thread wiper	-	O

	0	3	5
Lubrication type	Minimum lubrication	Semi dry	Complete dry

	S	3	5
Use	For light-weight and difficult-to-sew materials	For medium-weight materials	For heavy-weight materials

		-33S, -43S -45S	-453	-303, -403 -333, -433	-305 -405
Max. sewing speed		4,000 rpm		5,000 rpm*	4,500 rpm*
Start backtacking and continuous backtacking speed		220 - 3,000 rpm			
End backtacking speed		1,800 rpm			
Max. stitch length		4.2 mm	5 mm		
Presser foot height	Lifting lever	6 mm			
	Knee lifter	16 mm			
Feed dog height		0.8 mm			1.2 mm
Needle (DB×1, DP×5)		NS #9 - #11	#11 - #18		#19 - #22
Motor		AC servo motor (4-pole, 450W)			
Control circuit		Microprocessor			

*…When sewing at speeds of 4,000 rpm or higher, set the stitch length to 4.2 mm or less.

Rotary hook

-33S -43S	-303, -403 -333, -433	-305 -405	-45S -453
Lubricated / for light materials	Lubricated / for medium materials	Lubricated / for heavy materials	Rotary hook RP (lubrication-free rotary hook)

Lubricating oil

	-30[], -40[]	-33[], -43[]	-45[]
Rotary hook	High-speed spindle	High-speed spindle	-
Needle bar		Special Brother grease	Special Brother grease

2. NAMES OF MAJOR PARTS

G50 operation panel (advanced function LCD)

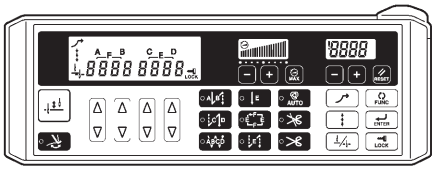

G10 operation panel (basic function LED)

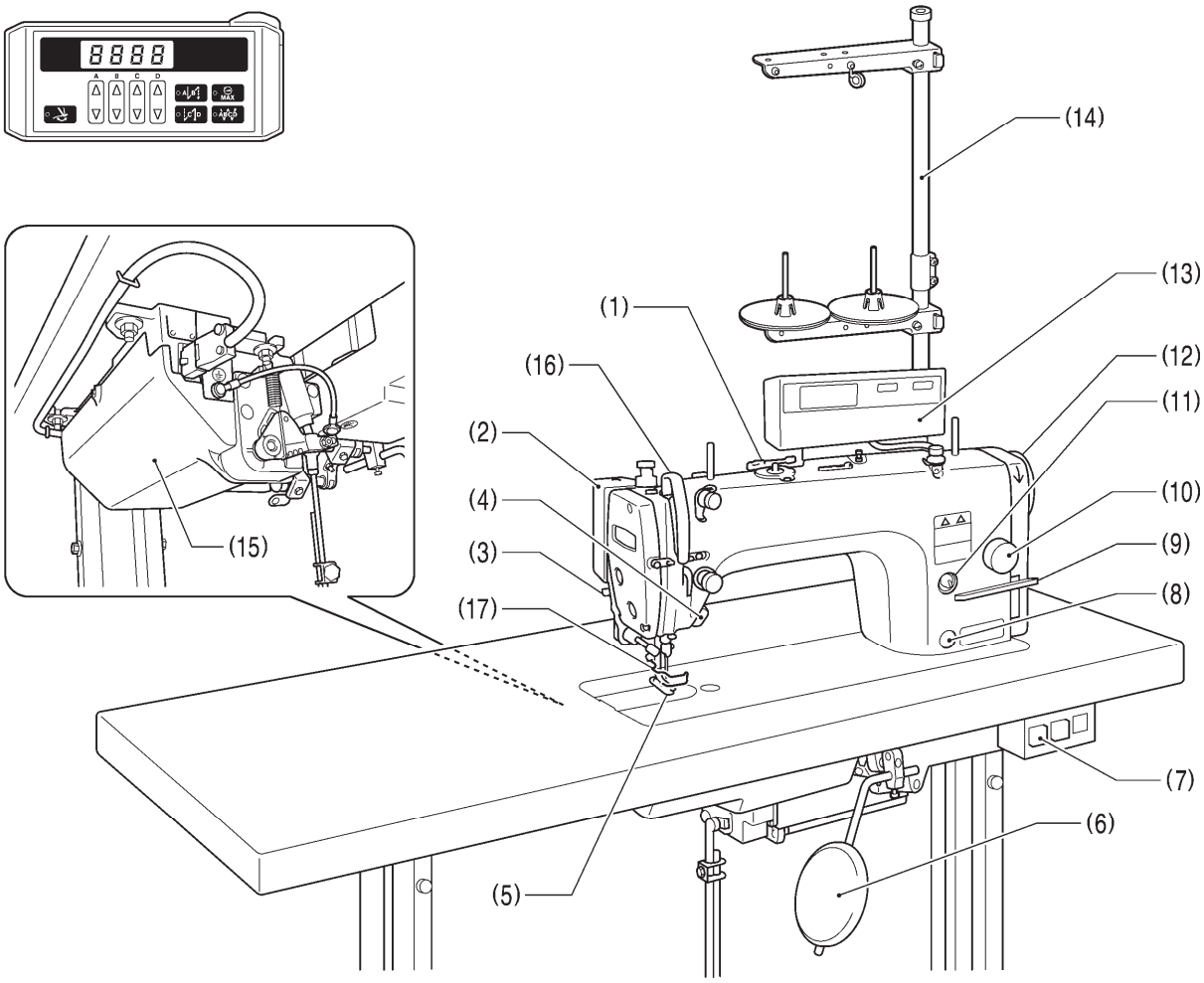

(1) Bobbin winder
(2) Thread wiper (-4[][] specifications)
(3) Lifting lever
(4) Actuator switch
(5) Presser foot
(6) Knee lifter assembly
(7) Power switch
(8) Oil gauge window (-[]0[], []3[] specifications)
(9) Reverse lever
(10) Stitch length dial
(11) Oil feeding pocket (-[]0[]・[]3[]specifications)
(12) Machine pulley
(13) Operation panel
(14) Cotton stand
(15) Control box

Safety devices
(16) Thread take-up cover
(17) Finger guard

3. INSTALLATION

⚠ CAUTION

- Machine installation should only be carried out by a qualified technician.
- Contact your Brother dealer or a qualified electrician for any electrical work that may need to be done.
- The sewing machine weighs more than 45 kg. The installation should be carried out by two or more people.
- Do not connect the power cord until installation is complete. The machine may operate if the treadle is depressed by mistake, which could result in injury.
- Secure the table so that it will not move when tilting back the machine head. If the table moves, it may crush your feet or cause other injuries.
- Use both hands to hold the machine head when tilting it back or returning it to its original position. If only one hand is used, the weight of the machine head may cause your hand to slip, and your hand may get caught.

About the machine set-up location

- Do not set up this sewing machine near other equipment such as televisions, radios or cordless telephones, otherwise such equipment may be affected by electronic interference from the sewing machine.
- The sewing machine should be plugged directly into an AC wall outlet. Operation problems may result if extension cords are used.

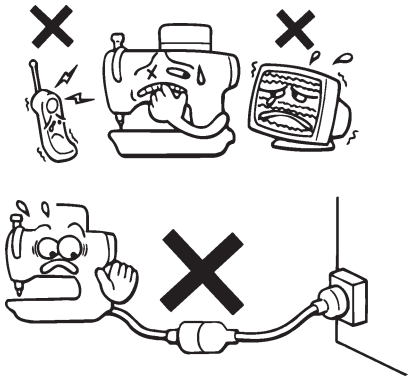

2086M

Carrying the machine

- The machine should be carried by the arm by two people as shown in the illustration.
  - * Hold the motor cover (A) by hand also so that the pulley does not rotate.

4125M

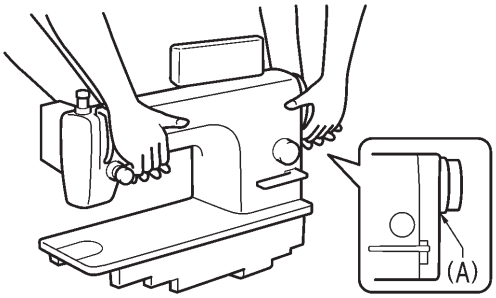

Tilting back the machine head

- Hold section (B) with your foot so that the table does not move, and then push the arm with both hands to tilt back the machine head.

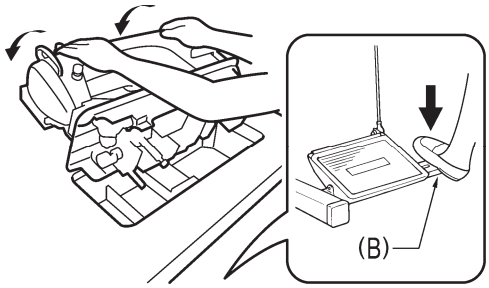

2088M

Returning the machine head to the upright position

1. Clear away any tools, etc. which may be near the table holes.
2. While holding the face plate with your left hand, gently return the machine head to the upright position with your right hand.

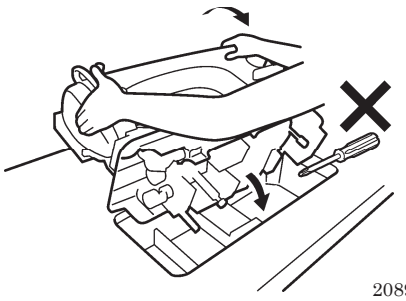

2089M

3-1. Table processing diagram

- The top of the table should be 40 mm in thickness and should be strong enough to hold the weight and with-stand the vibration of the sewing machine.
- Drill holes as indicated in the illustration below.

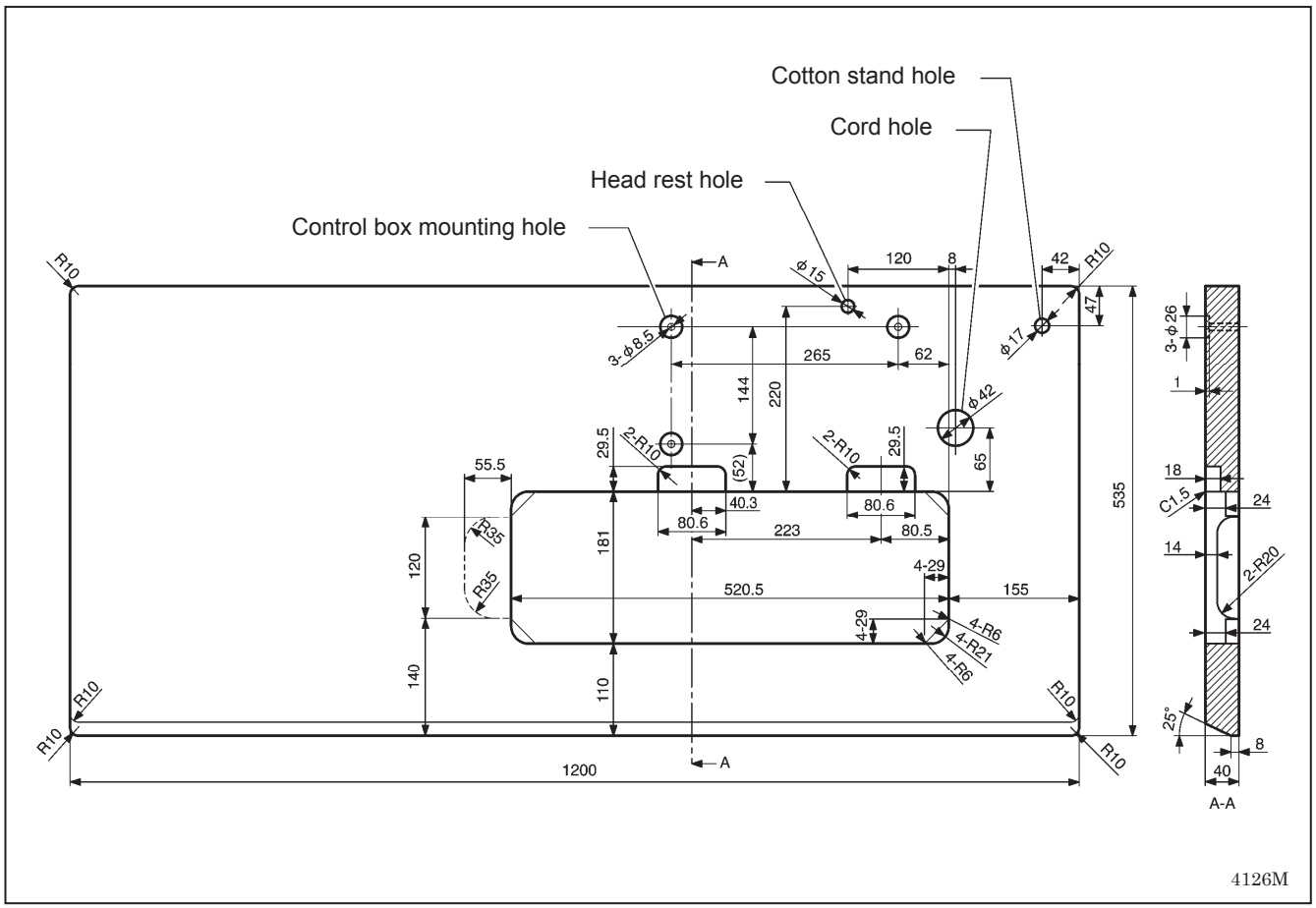

3-2. Installation

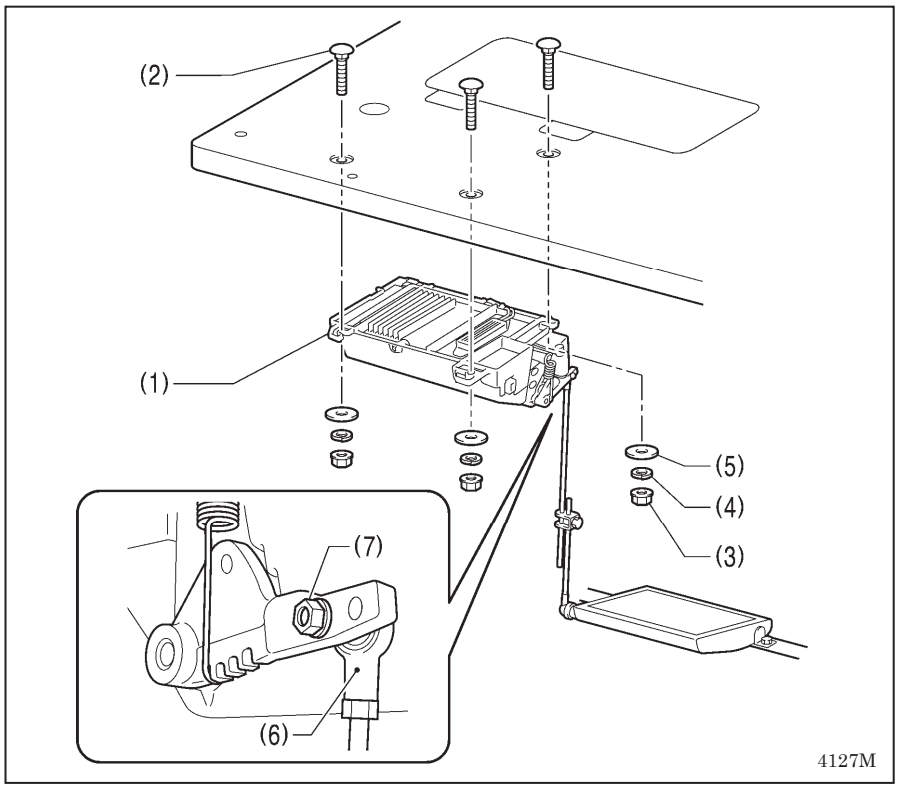

1. Control box

(1) Control box
(2) Bolts [3 pcs]
(3) Nuts [3 pcs]
(4) Spring washers [3 pcs]
(5) Washers [3 pcs]

2. Connecting rod

(6) Connecting rod
(7) Nut

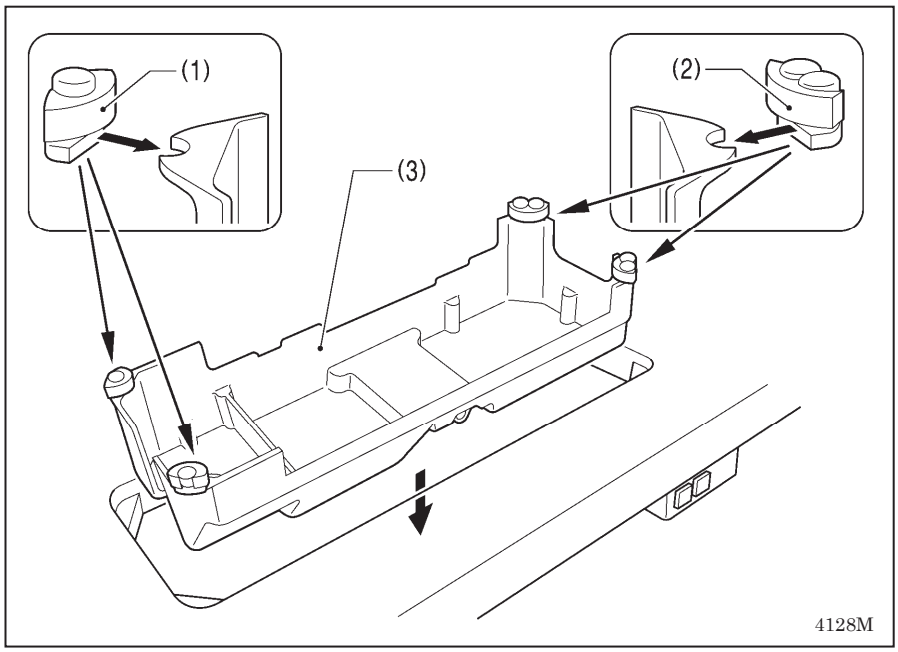

3. Oil pan

(1) Head cushions (left) [2 pcs]
(2) Head cushions (right) [2 pcs]
(3) Oil pan

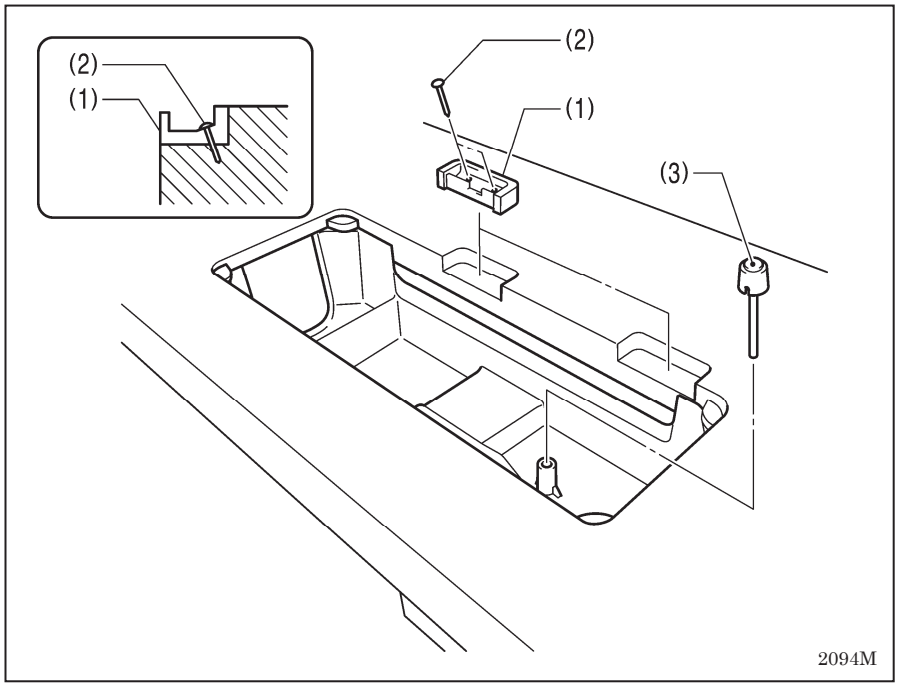

4. Rubber cushions

(1) Rubber cushions [2 pcs]
(2) Nails [4 pcs]

5. Knee lifter complying bar

(3) Knee lifter complying bar

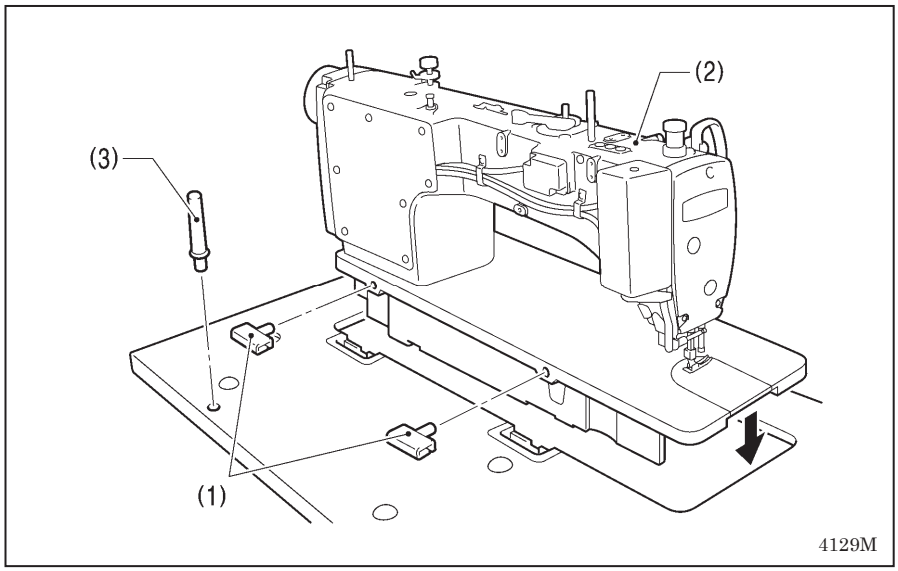

6. Machine head

(1) Hinges [2 pcs]
(2) Machine head
(3) Head rest

NOTE:

Tap the head rest (3) securely into the table hole. If the head rest (3) is not pushed in as far as it will go, the machine head will not be sufficiently stable when it is tilted back.

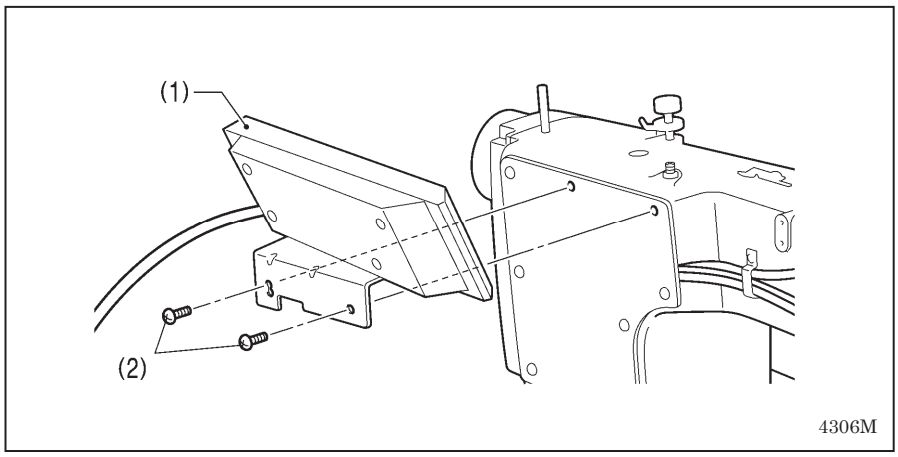

7. Operation panel

(1) Operation panel
(2) Screws [2 pcs]
(Use for tightening rear cover)

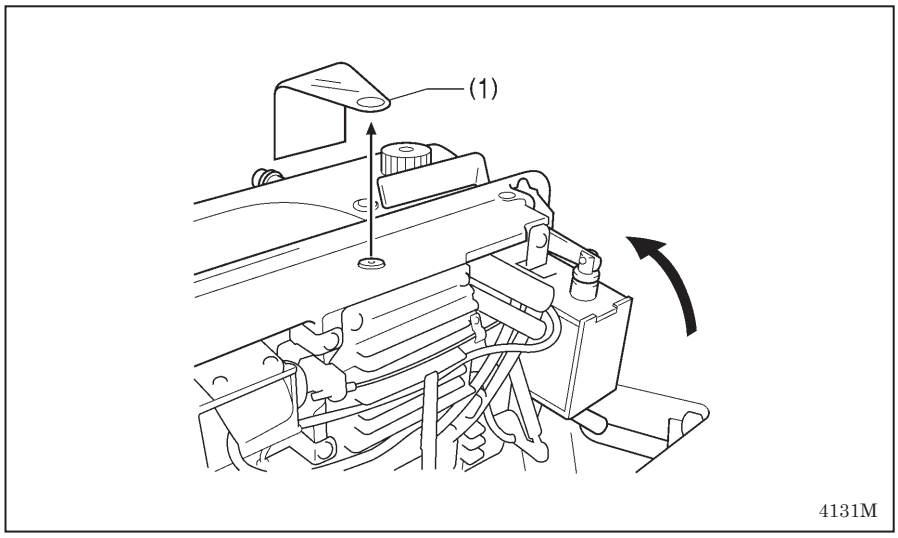

8. Sticker (Remove)

(1) Sticker

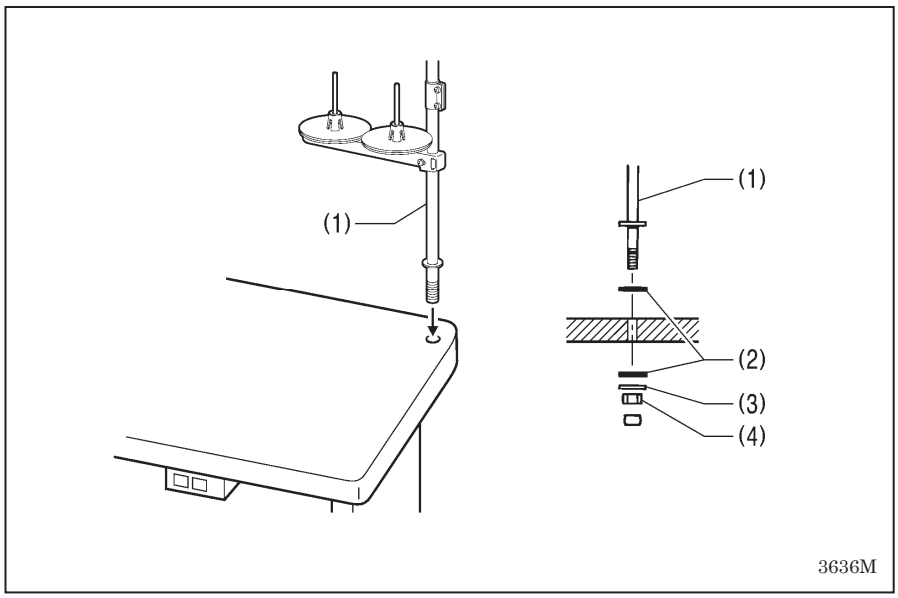

9. Cotton stand

(1) Cotton stand

NOTE:
Securely tighten the nut (4) so that the two rubber cushions (2) and the washer (3) are securely clamped and so that the cotton stand (1) does not move.

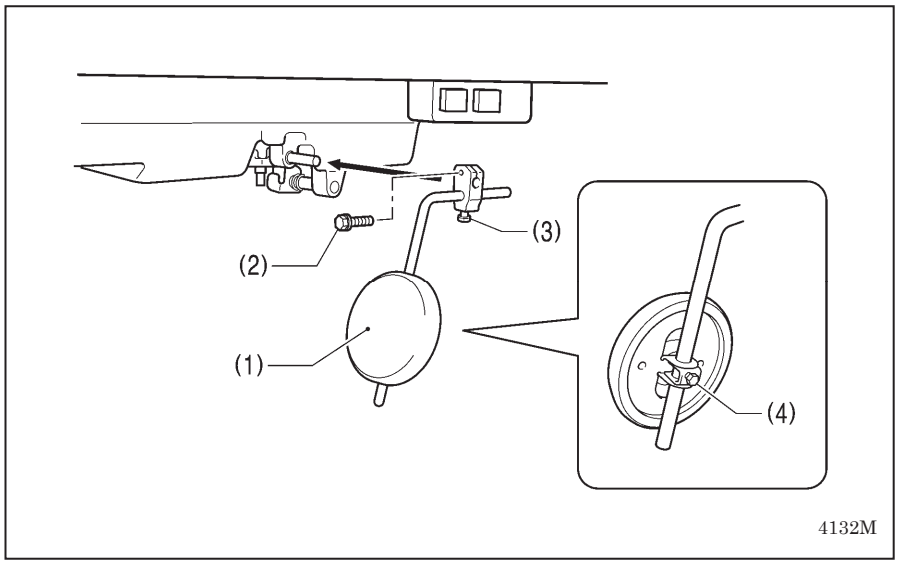

10. Knee lifter plate

(1) Knee lifter plate
(2) Bolt

* Loosen the bolt (3) and the bolt (4), and then adjust the position of the knee lifter plate (1) so that it is easy to use.

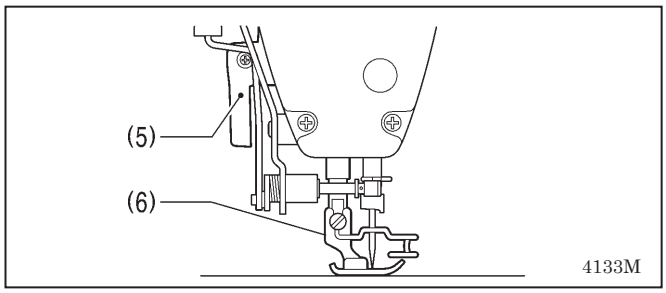

<Knee lifter adjustment>

1. Turn the machine pulley so that the feed dog is below the top of the needle plate.
2. Lower the presser foot (6) by using the lifting lever (5).

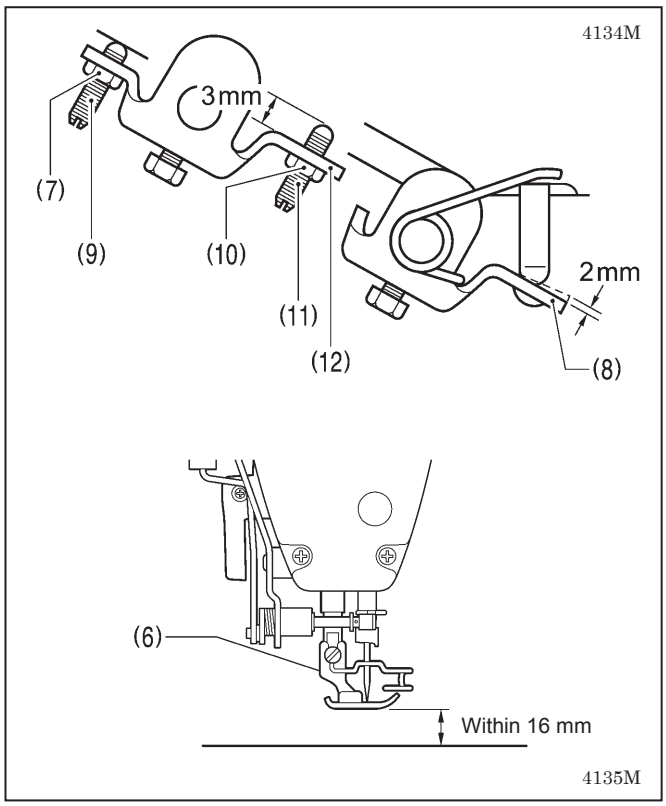

3. Loosen the nut (7).
4. Turn the screw (9) to adjust so that the amount of play in the knee lifter (8) is approximately 2 mm when the knee lifter plate (1) is gently pressed.
5. Securely tighten the nut (7).
6. Loosen the nut (10).
7. Turn the screw (11) until the distance between the end of the screw (11) and the knee lifter (12) is approximately 3 mm.
8. Turn the adjusting screw (11) to adjust so that the presser foot (6) is at the desired position within a distance of 16 mm of the needle plate when the knee liter plate (1) is fully pressed.
9. After adjustment is completed, securely tighten the nut (10).

3-3. Lubrication (-[]0[], []3[] specifications)

* If the sewing machine is -[]5[] specifications, it is a complete dry type machine, and so no lubrication is necessary.

⚠ CAUTION

- Do not connect the power cord until lubrication has been completed, otherwise the machine may operate if the treadle is depressed by mistake, which could result in injury.
- Be sure to wear protective goggles and gloves when handling the lubricating oil and grease, so that they do not get into your eyes or onto your skin, otherwise inflammation can result.
  Furthermore, do not drink the oil or eat the grease under any circumstances, as they can cause vomiting and diarrhea.
  Keep the oil out of the reach of children.
- When cutting the nozzle of the oil tank, hold the base of the nozzle securely.
  If you hold the end of the nozzle, injury from the scissors may result.

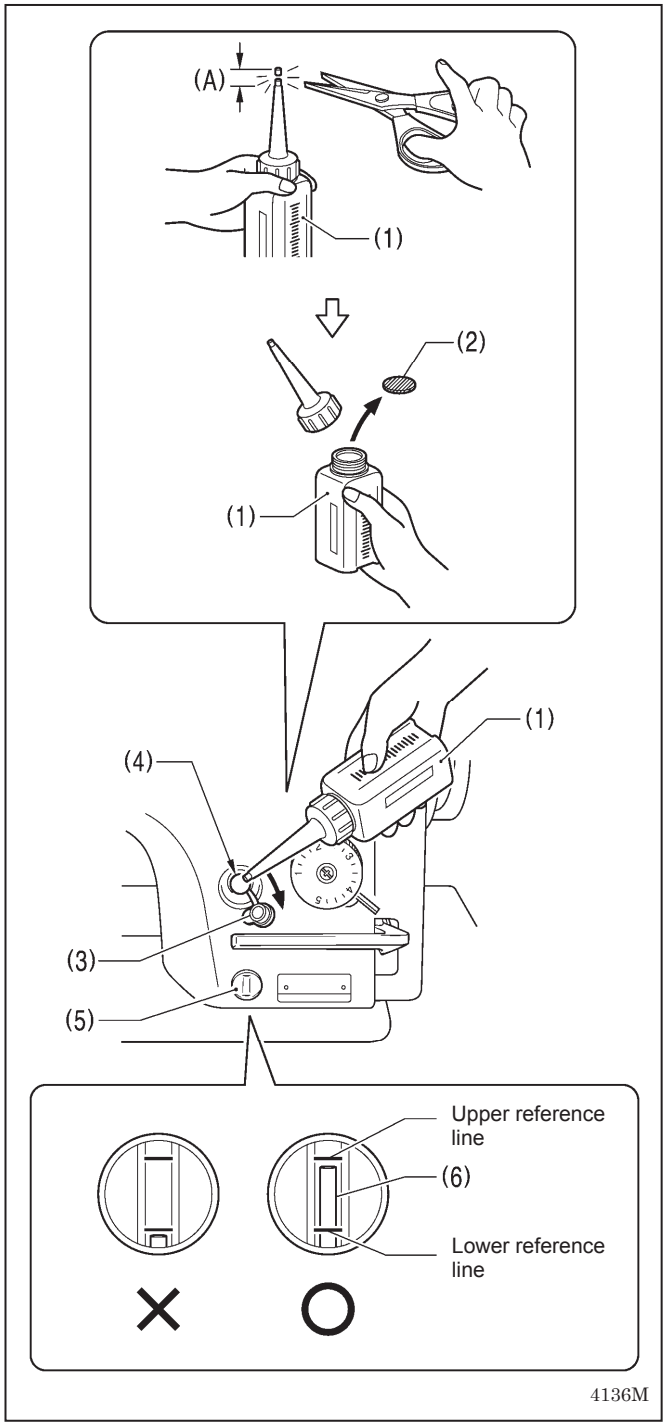

- The sewing machine should always be lubricated and the oil supply replenished before it is used for the first time, and also after long periods of non-use.
- Use only the lubricating oil <Nippon Oil Corporation Sewing Lube 10N; VG10> specified by Brother.
  * If this type of lubricating oil is difficult to obtain, the recommended oil to use is <Exxon Mobil Essotex SM10; VG10>.

1. Hold the base of the nozzle of the accessory oil tank (1), and use scissors to cut about half-way along the straight section (A) of the nozzle.
2. Loosen and remove the nozzle, and then remove the seal (2).
3. Tighten the nozzle.
4. Open the oil feeding pocket cover (3).
5. Insert the nozzle of the oil tank (1) deeply into the oil feeding pocket (4), and then add about 120 ml of lubricating oil.
6. Check that the oil gauge (6) comes to the upper reference line in the oil gauge window (5).
7. Close the oil feeding pocket cover (3).

<Lubrication oil replenishment interval>

Be sure to add more oil if the oil gauge (6) is below the lower reference line.

3-4. Connecting the cords

DANGER

Wait at least 5 minutes after turning off the power switch and disconnecting the power cord from the wall outlet before opening the cover of the control box. Touching areas where high voltages are present can result in severe injury.

CAUTION

Contact your Brother dealer or a qualified electrician for any electrical work that may need to be done.

Do not connect the power cord until all cords have been connected.
The machine may operate if the treadle is depressed by mistake, which could result in injury.

When securing the cords, do not bend the cords excessively or fasten them too hard with staples, otherwise there is the danger that fire or electric shocks could occur.

Be sure to connect the ground. If the ground connection is not secure, you run a high risk of receiving a serious electric shock, and problems with correct operation may also occur.

3-4-1. Opening the control box cover

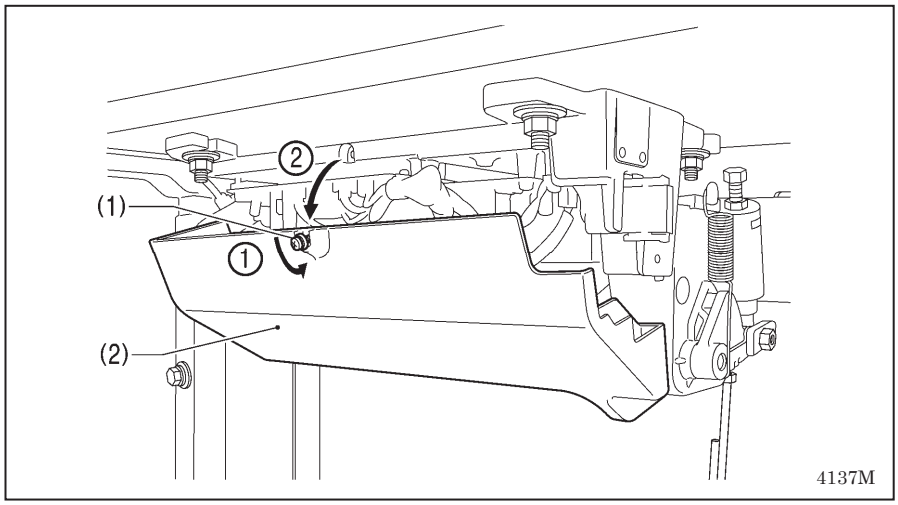

(1) Screw
(2) Cover

3-4-2. Connecting the cords

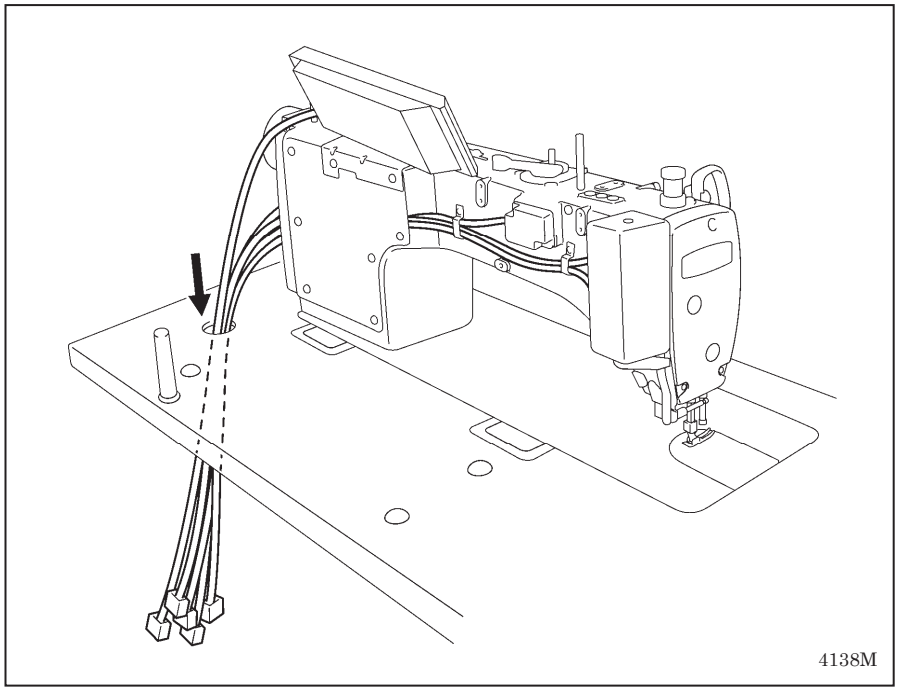

1. Sewing machine cords

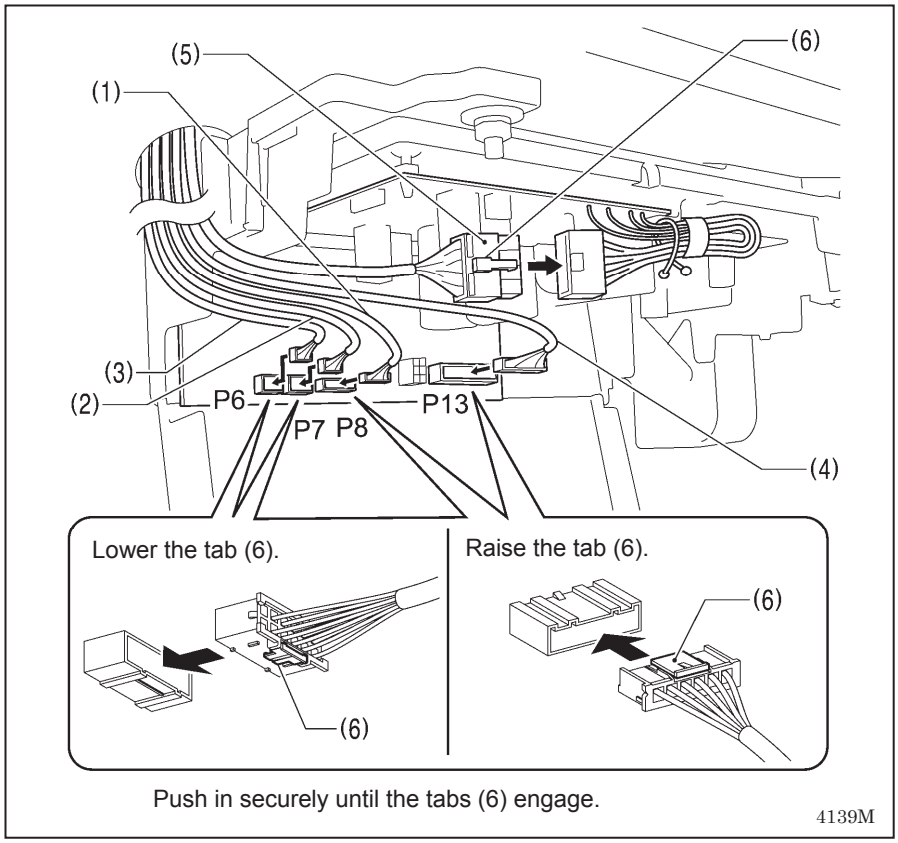

(1) 6-pin head detector unit connector
(2) 12-pin operation panel connector
(3) 10-pin resolver connector
(4) 14-pin machine connector
(5) 4-pin motor connector

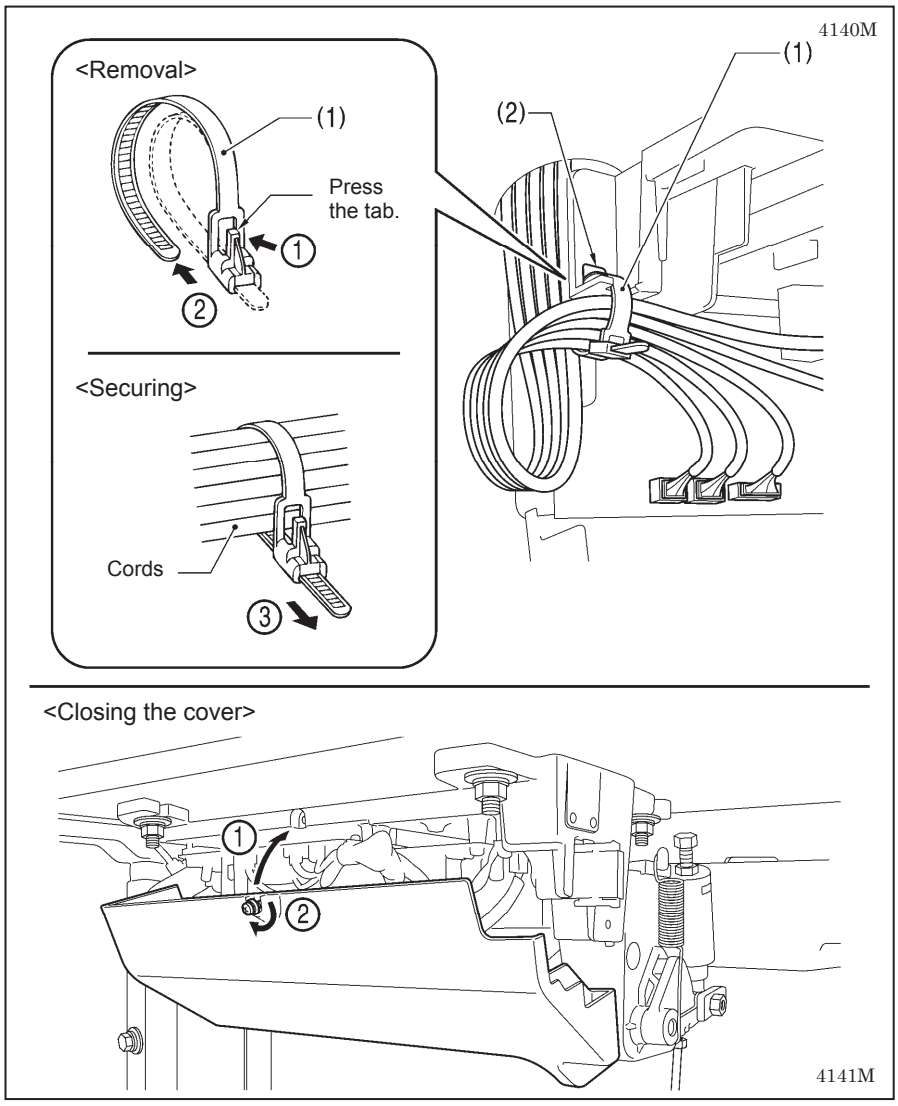

2. Binding the cords

(1) Repeat cable tie

NOTE:

- Bind the cords in such a way that the connector does not get pulled out.
- All cords that come out from the control box should be secured to the cord holder (2) using the repeat cable tie (1), otherwise vibration from the sewing machine may cause the cords to become disconnected, which can cause problems with the operation of the control box.

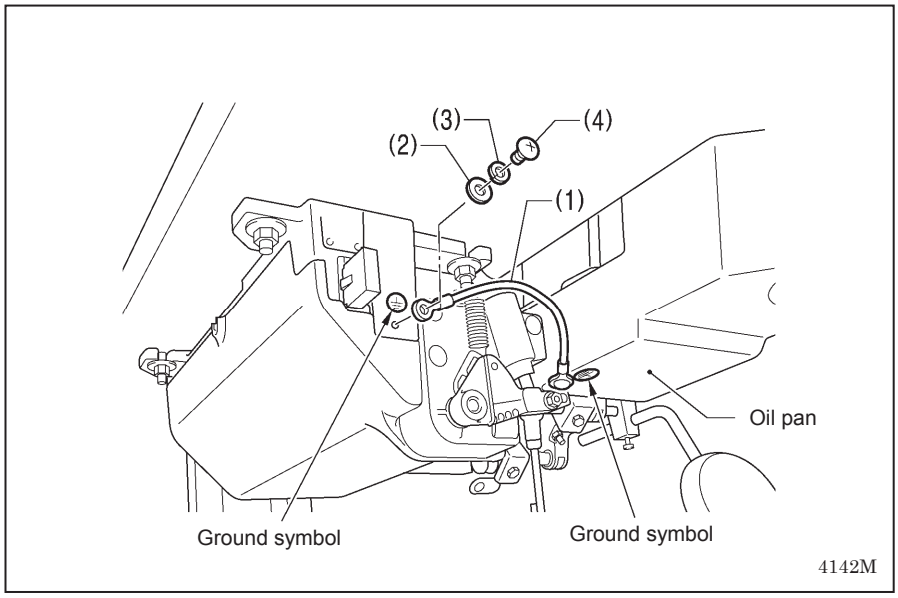

3. Ground wire

(1) Ground wire
(2) Washer
(3) Spring washer
(4) Screw

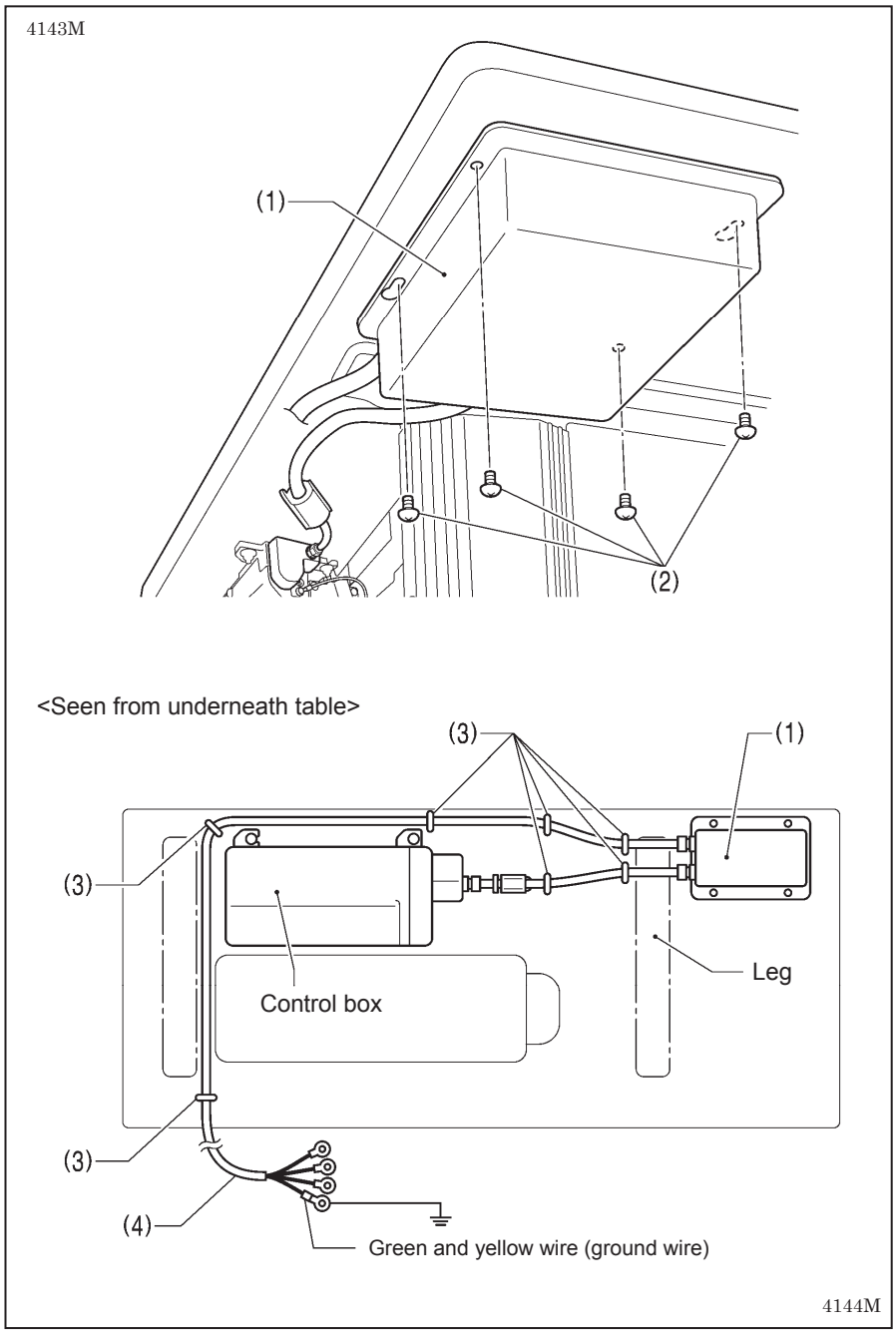

4. Other cords

Connect cords that match the voltage specifications.

< Europe specifications >

(1) Filter box
(2) Screws [4 pcs.]
(3) Staples [7 pcs.]
(4) Power cord

1. Attach an appropriate plug to the power cord (4). (The green and yellow wire is the ground wire.)
2. Insert the power plug into a properly-grounded electrical outlet.

NOTE:

- Take care when tapping in the staples (3) to make sure that they do not pierce the cords.
- Do not use extension cords, otherwise machine operation problems may result.

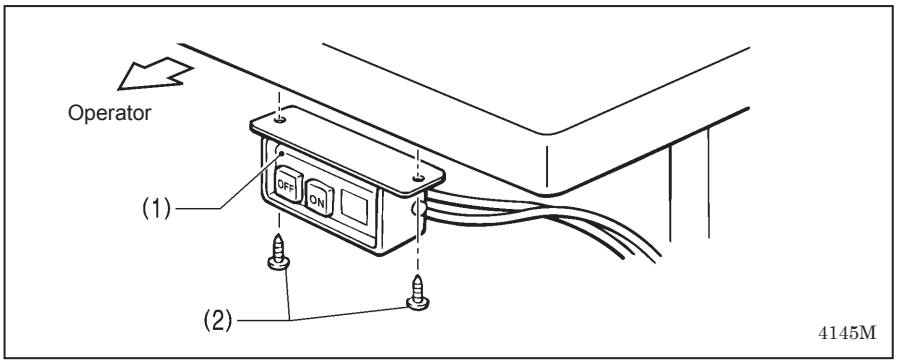

<200 V system >

(1) Power switch
(2) Screws [2 pcs]

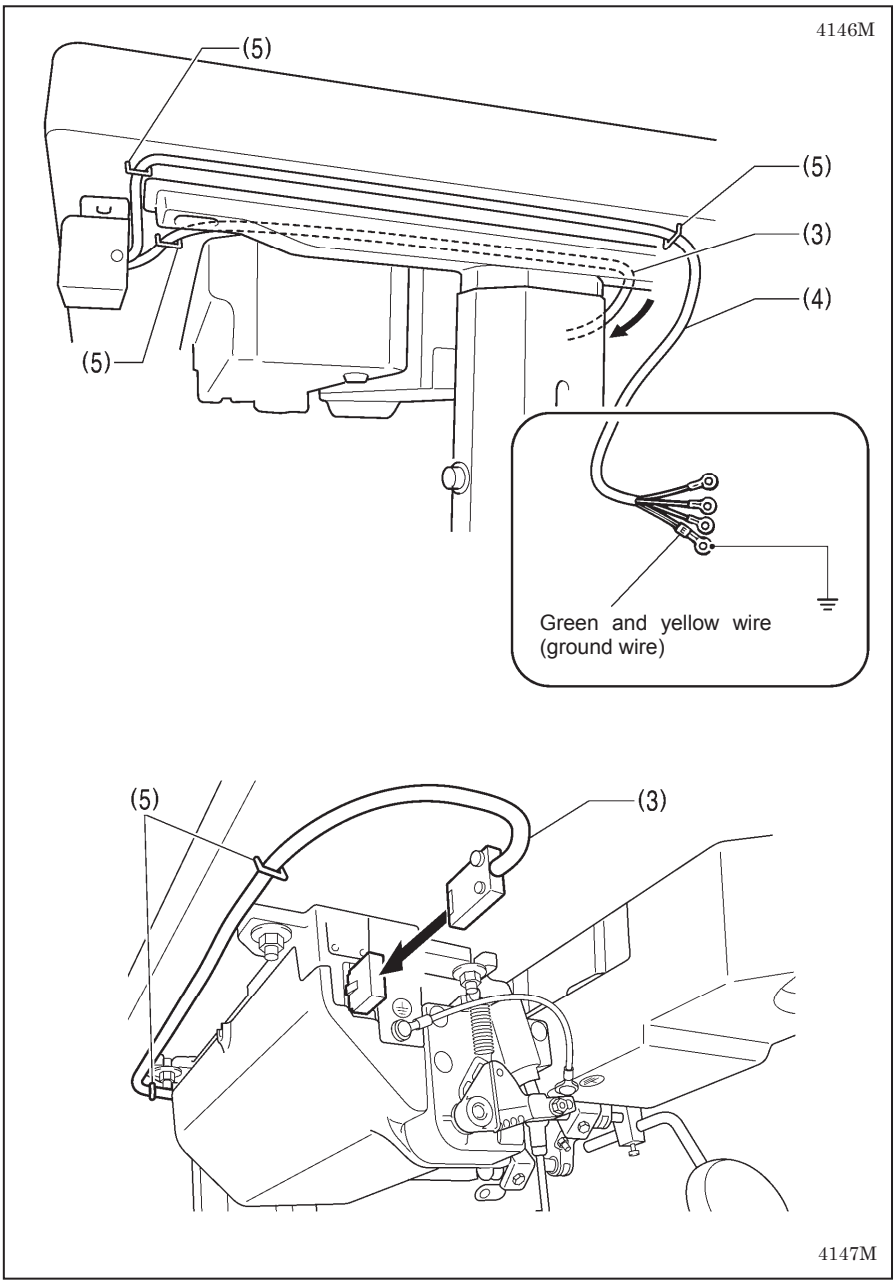

(3) 3-pin power supply connector
(4) Power cord
(5) Staples [5 pcs.]

1. Attach an appropriate plug to the power cord (4). (The green and yellow wire is the ground wire.)
2. Insert the power plug into a properly-grounded electrical outlet.

NOTE:

- Take care when tapping in the staples (5) to make sure that they do not pierce the cords.
- Do not use extension cords, otherwise machine operation problems may result.

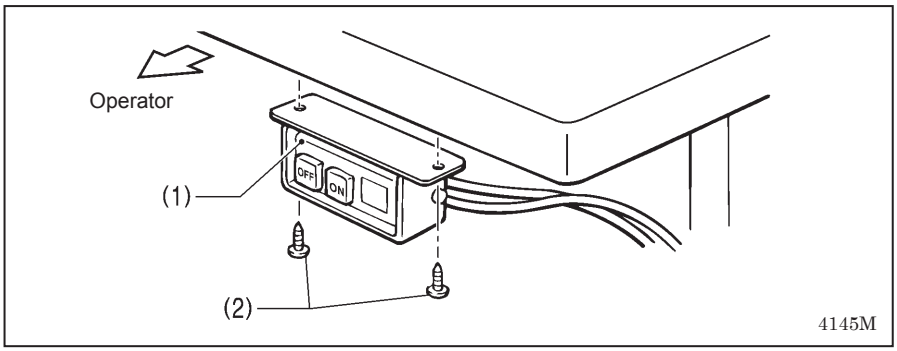

<100 V/400 V system >

(1) Power switch
(2) Screws [2 pcs]

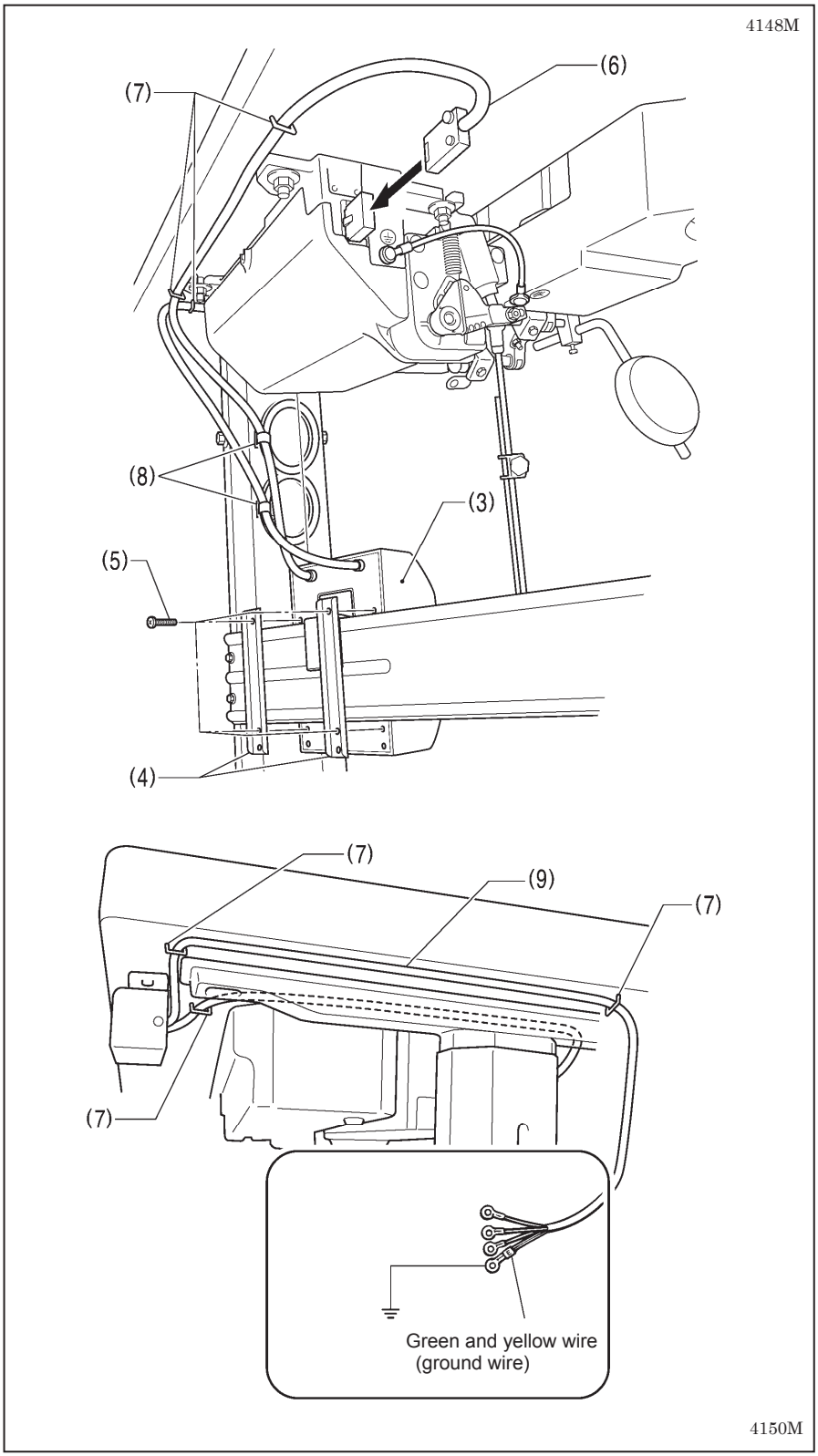

(3) Transformer box
(4) Transformer box plates [2 pcs.]
(5) Screw [with washer]
(6) 3-pin power supply connector
(7) Staples [6 pcs.]
(8) Cord clamps [2 pcs.]
(9) Power cord

1. Attach an appropriate plug to the power cord (9). (The green and yellow wire is the ground wire.)
2. Insert the power plug into a properly-grounded electrical outlet.

NOTE:

- Take care when tapping in the staples (7) to make sure that they do not pierce the cords.
- Do not use extension cords, otherwise machine operation problems may result.

3-5. Test operation (Operating the treadle)

⚠ CAUTION

Do not touch any of the moving parts or press any objects against the machine while sewing, as this may result in personal injury or damage to the machine.

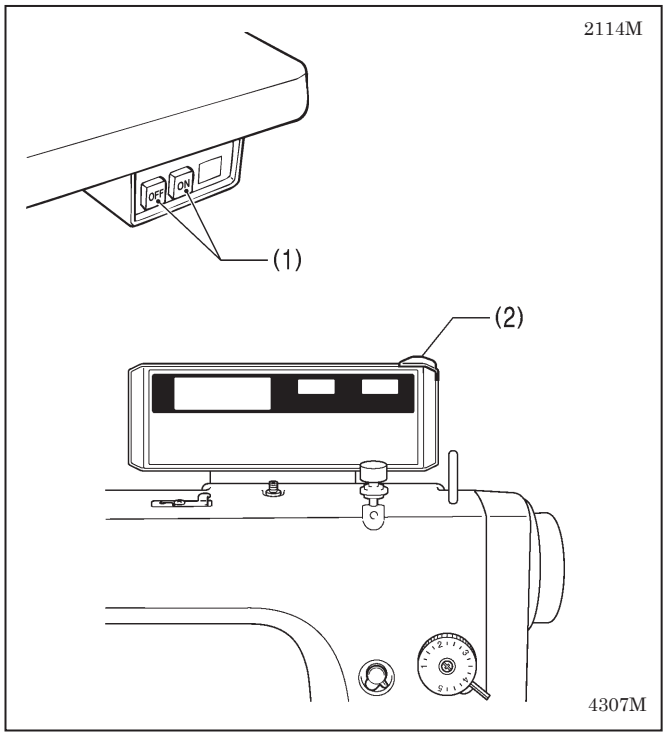

1. Turning on the power

Press the ON power switch (1).

The power indicator (2) will illuminate.

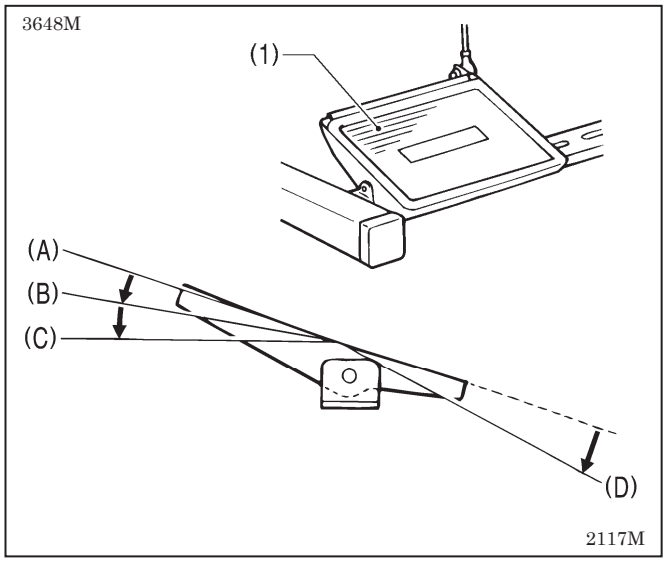

2. Test operation

1. Check that the machine sews at low speed when the treadle (1) is gently pressed to position (B).
2. Then check that it sews at high speed when the treadle (1) is gently pressed to position (C).
3. After pressing the treadle (1) forward, check that the needle is lowered to the top of the needle plate when the treadle (1) is returned to the neutral position (A). (when needle down stopping has been set.)
4. If the treadle (1) is pressed to position (D), thread trimming is carried out and the needle then rises above the needle plate and stops.

4. PREPARATION BEFORE SEWING

4-1. Installing the needle

⚠ CAUTION

Turn off the power switch before installing the needle.
The machine may operate if the treadle is depressed by mistake, which could result in injury.

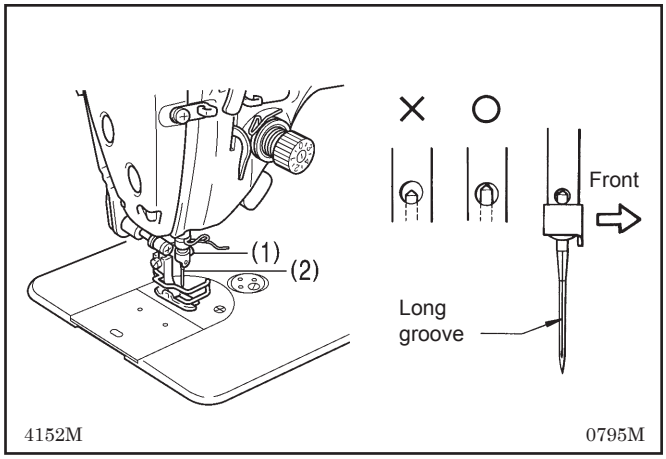

1. Turn the machine pulley to move the needle bar to its highest position.
2. Loosen the screw (1).
3. Insert the needle (2) in a straight line as far as it will go, making sure that the long groove on the needle is at the left, and then securely tighten the screw (1).

4-2. Removing the bobbin case

⚠ CAUTION

Turn off the power switch before removing the bobbin case.
The machine may operate if the treadle is depressed by mistake, which could result in injury.

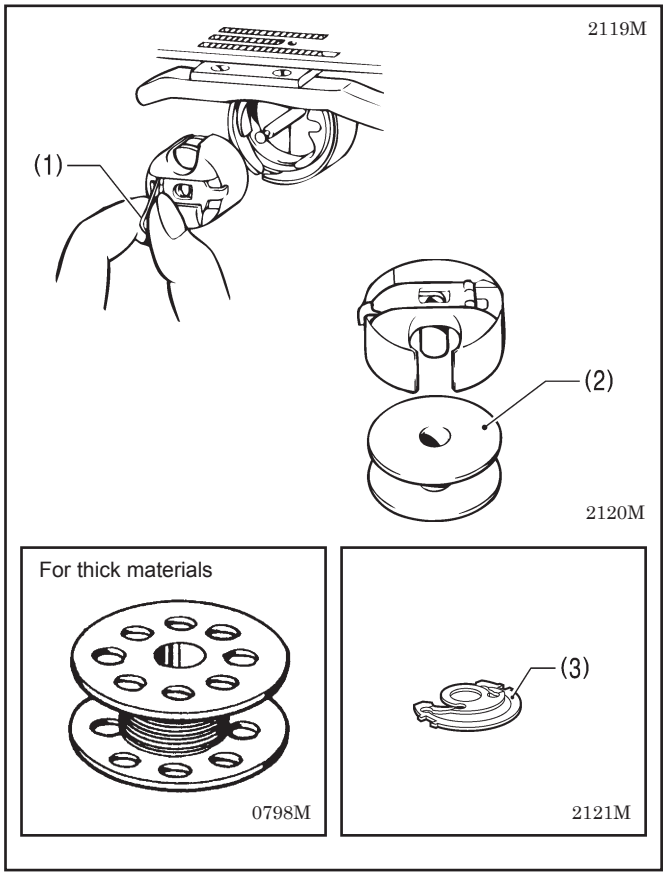

1. Turn the machine pulley to raise the needle until it is above the needle plate.
2. Pull the latch (1) of the bobbin case upward and then remove the bobbin case.
3. The bobbin (2) will come out when the latch (1) is released.

* There is an anti-spin spring (3) inside the bobbin case. The anti-spin spring (3) prevents the bobbin from racing at times such as during thread trimming.
* Use bobbins (2) made of light alloy as specified by BROTHER.

4-3. Winding the lower thread

⚠ CAUTION

Do not touch any of the moving parts or press any objects against the machine while winding the lower thread, as this may result in personal injury or damage to the machine.

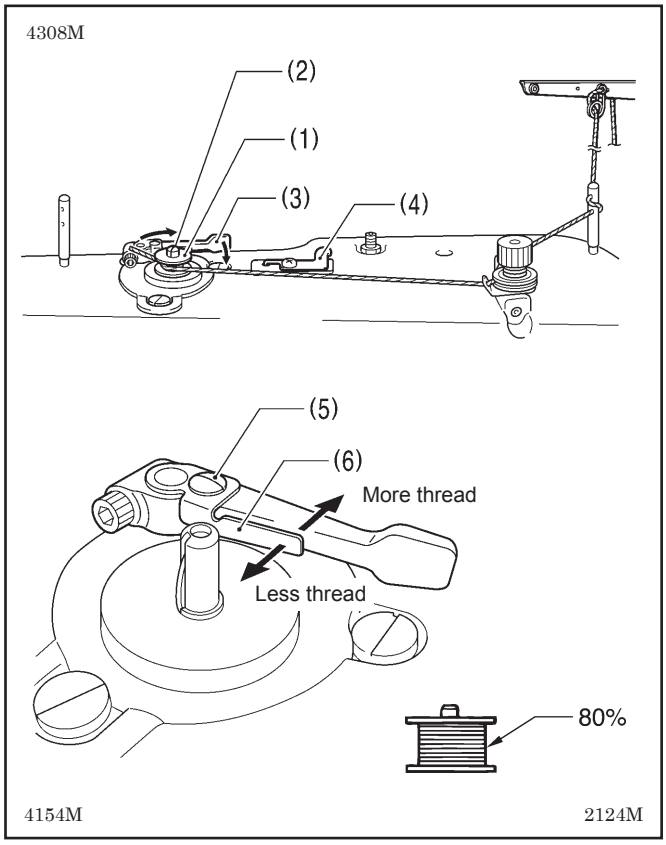

1. Turn on the power switch.
2. Place the bobbin (1) onto the bobbin winder shaft (2).
3. Wind the thread several times around the bobbin (1) in the direction indicated by the arrow.
4. Push the bobbin presser arm (3) toward the bobbin(1).
5. Raise the presser foot with the lifting lever.
6. Depress the treadle. Lower thread winding will then start.
7. Once winding of the lower thread is completed, the bobbin presser arm (3) will return automatically.
8. After the thread has been wound on, remove the bobbin and cut the thread with the knife (4).

* Loosen the screw (5) and move the bobbin presser (6) to adjust the amount of thread wound onto the bobbin.

NOTE:
The amount of thread wound onto the bobbin should be a maximum of 80 % of the bobbin capacity.

4-4. Installing the bobbin case

⚠ CAUTION

Turn off the power switch before installing the bobbin case.
The machine may operate if the treadle is depressed by mistake, which could result in injury.

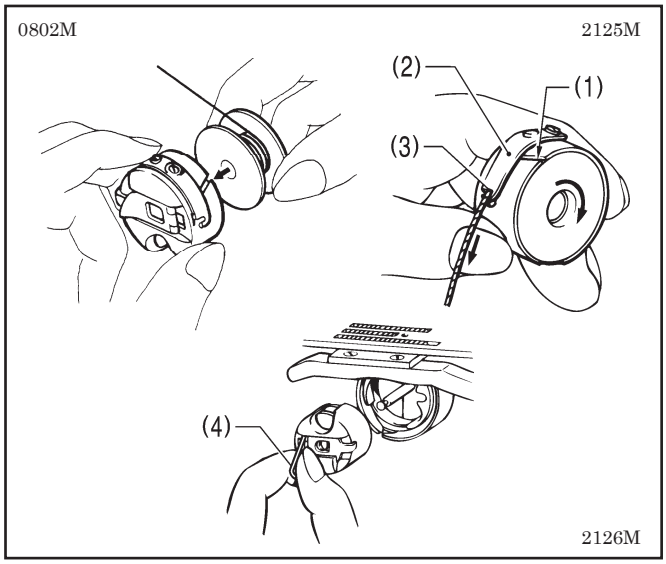

1. Turn the machine pulley to raise the needle until it is above the needle plate.
2. While holding the bobbin so that the thread winds to the right, insert the bobbin into the bobbin case.
3. Pass the thread through the slot (1) and under the tension spring (2), and then pull it out from the thread guide (3).
4. Check that the bobbin turns clockwise when the thread is pulled.
5. Hold the latch (4) on the bobbin case and insert the bobbin case into the rotary hook.

4-5. Threading the upper thread

⚠ CAUTION

Turn off the power switch before threading the upper thread.
The machine may operate if the treadle is depressed by mistake, which could result in injury.

Turn the machine pulley and raise the thread take-up (1) before threading the upper thread.
This will make threading easier and it will prevent the thread from coming out at the sewing start.

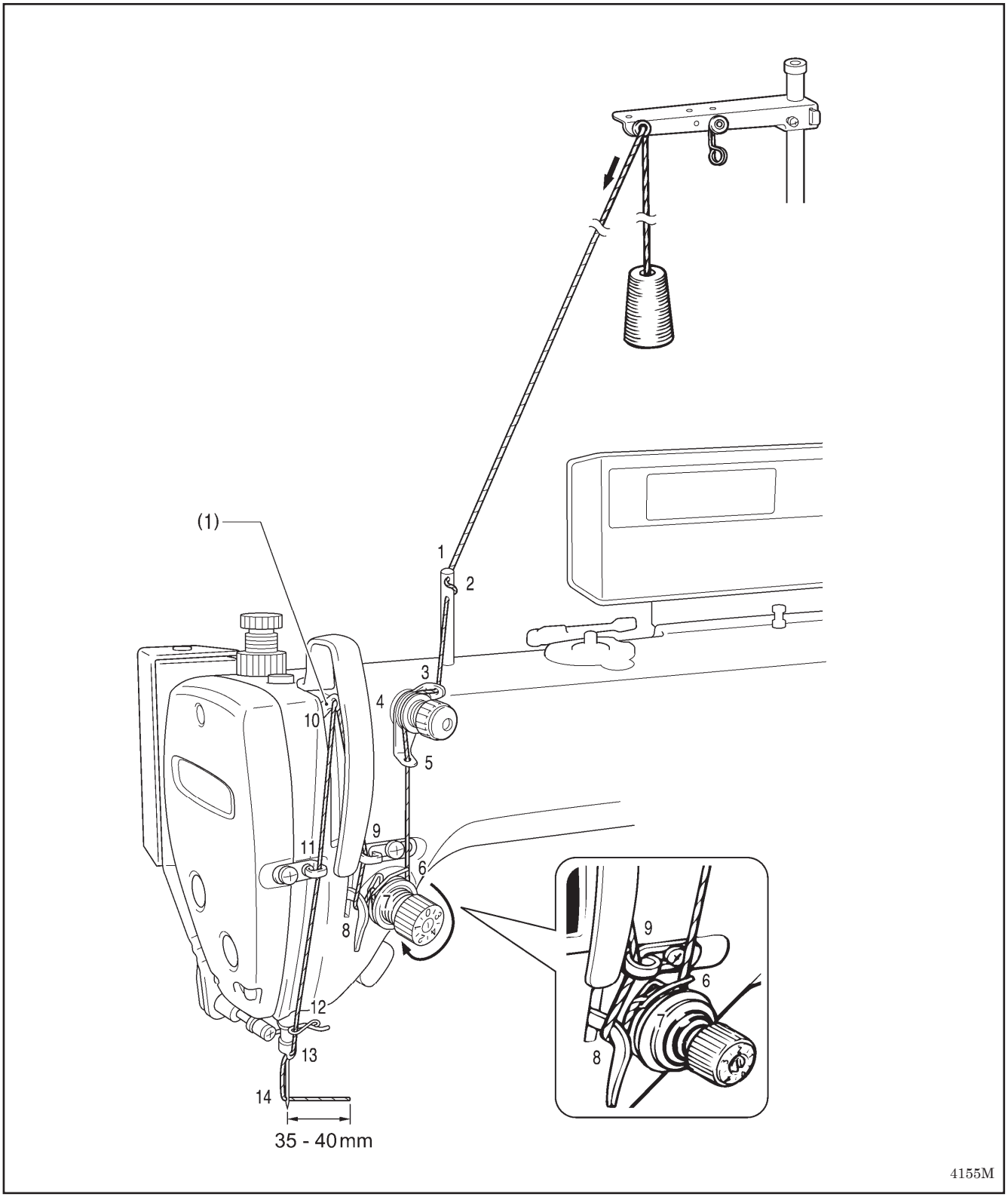

4-6. Adjusting the stitch length

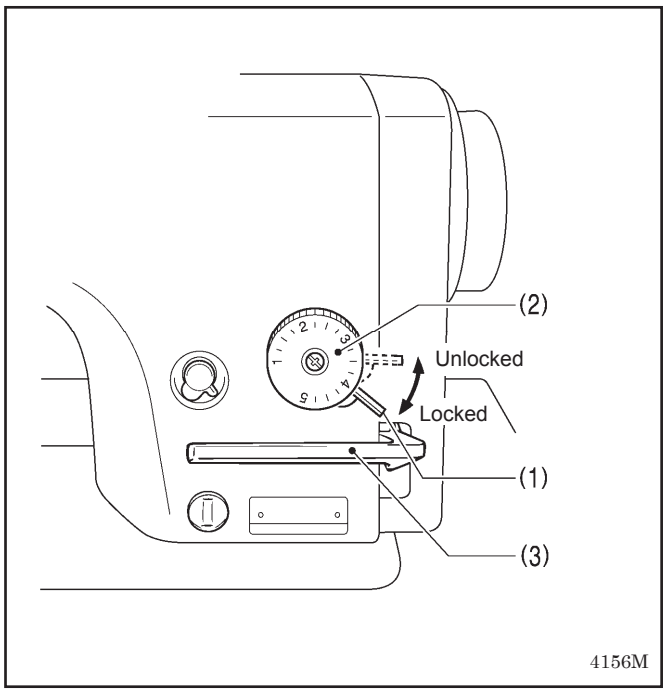

1. Push the dial lock lever (1) up until it clicks to release the lock.
2. Turn the stitch length dial (2) clockwise or counter-clockwise so that the desired stitch length is at the uppermost position on the dial.
   - The larger the number, the longer the stitch length will be.
     (The numbers on the dial are for use as a guide. The length of the finished stitches may vary depending on the type and thickness of material being sewn. Adjust while looking at the finished stitches.)
   - When turning the stitch length dial (2) from a larger setting to a smaller setting, it will be easier to turn the dial if the reverse lever (3) is pushed to the halfway-down position.
3. Push the dial lock lever (1) down firmly to lock it.

* Check that the stitch length dial (2) does not rotate.

4-7. Using the thread wiper (-4[][] specifications)

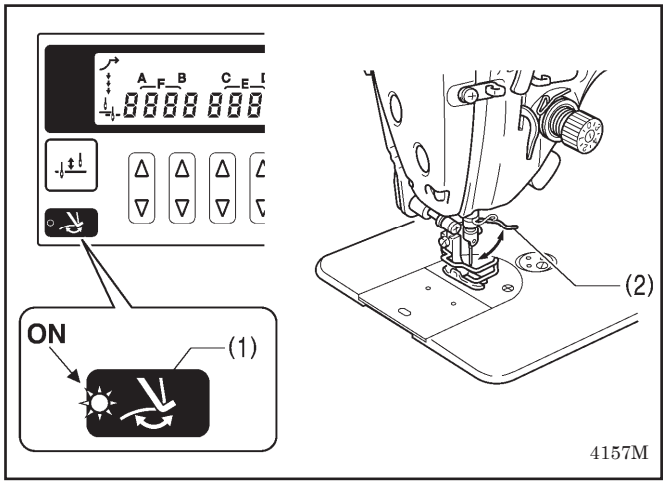

Press the thread wiper key (1) on the operation panel so that the indicator illuminates. If this is done, the thread wiper (2) will operate after the thread is trimmed.

4-8. Using the knee lifter

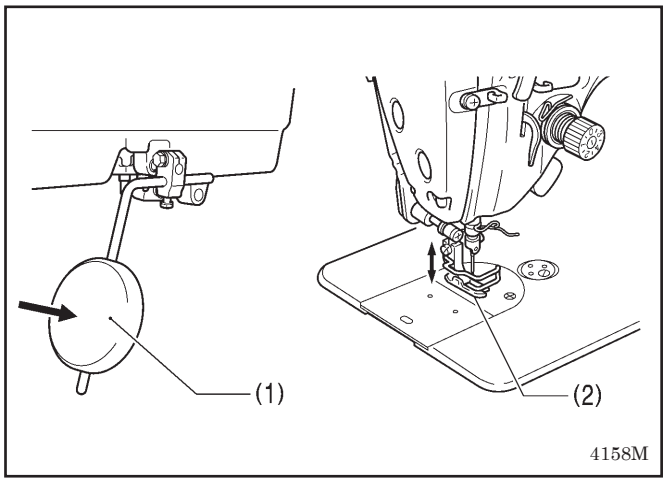

The presser foot (2) can be raised by pressing the knee lifter plate (1).

5. USING THE G50 OPERATION PANEL (BASIC OPERATIONS)

5-1. Names and functions

- The operation panel keys cannot be operated while sewing is in progress.
  Select the keys and set the number of stitches before starting sewing.
- In the case of keys with indicators, the indicator illuminates when that function is operating, and the indicator switches off when the key is pressed once more.

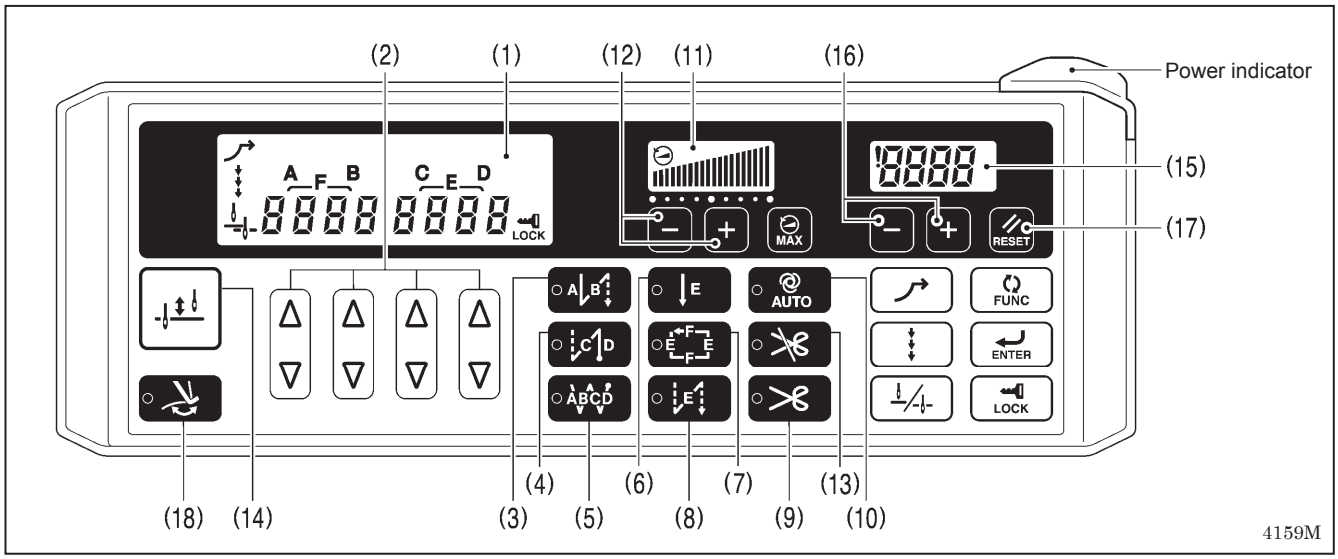

The power indicator illuminates when the power switch is turned on.

(1) Main display

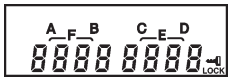

- In start backtack display, AB illuminates and the number of stitches for A and B are displayed.
- In end backtack display, CD illuminates and the number of stitches for C and D are displayed.
- In continuous backtack display, ABCD illuminates and the number of stitches for A, B, C and D are displayed.
- In fixed stitch display, E or F illuminates and the number of stitches for E or F are displayed.

2136M

(2) Setting keys

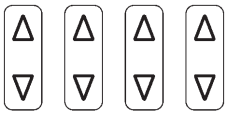

These keys are used to set the number of backtack stitches for A, B, C and D and the number of fixed stitches for E and F.

- When the △ key is pressed, the setting increases from 0 up to 99.
- When the ▽ key is pressed, the setting decreases from 99 down to 0.

4160M 2138M 2139M

(3) Start backtack key

When this key is pressed so that the indicator illuminates, the number of start backtack stitches (0−99) in the A and B stitch number displays is sewn.

4161M

(4) End backtack key

When this key is pressed so that the indicator illuminates, the number of end backtack stitches (0−99) in the C and D stitch number displays is sewn. When the treadle is depressed backward, the end backtack stitches are sewn and then the thread is trimmed automatically.
If the treadle has not yet been depressed backward, the end backtack function can be set to ON, the number of stitches can be changed and the function can be set back to OFF.

4162M

(5) Continuous backtack key

When this key is pressed so that the indicator illuminates, the number of backtack stitches (0−99) in the A, B, C and D stitch number displays is sewn continuously. After the sewing machine sews a full cycle of stitches set by A, B, C and D, the thread is trimmed automatically.

4163M

(6) Fixed stitch key

When this key is pressed so that the indicator illuminates, the number of stitches (1-1999) in the E stitch number display is sewn, and then the sewing machine stops automatically.

4164M

(7) Name label key

When this key is pressed so that the indicator illuminates, fixed stitch sewing of the number of stitches (1-1999) in the E and F stitch number displays is carried out repeatedly.

4165M

(8) Pleat presser sewing key

When this key is pressed so that the indicator illuminates, the number of backtack stitches (1-1999) in the E stitch number display can be sewn by pressing the actuator switch.

4166M

(9) Thread trimming key

- This can only be set for use together with the fixed stitch key (6) or the name label key (7).
- When this key is pressed so that the indicator illuminates, the set number of stitches (start or end backtack stitches or fixed stitches) are sewn, and then the thread is trimmed automatically.

4167M

(10) AUTO key

- This can only be set for use together with the continuous backtack key (5), the fixed stitch key (6) or the name label key (7).
- When this key is pressed so that the indicator illuminates, the set number of stitches (start or end backtack stitches, fixed stitches or thread trimming) are sewn automatically simply by depressing the treadle once.

4168M

(11) Sewing speed control display

This shows the sewing speed when the treadle is depressed to the maximum amount.

- If all bars are illuminated, it indicates that the maximum speed can be set.
- If all bars are switched off, it indicates the minimum speed (220 rpm).

4169M

(12) Sewing speed control keys

These keys let you adjust the sewing speed that is used when the treadle is depressed to the maximum amount.
The sewing speed can also be adjusted while sewing is in progress.

- When the + key is pressed, the sewing speed becomes faster.
- When the - key is pressed, the sewing speed becomes slower.

4170M

(13) Thread trimming lock key

- When this key is pressed so that the indicator illuminates, the sewing machine stops in the needle up position without thread trimming being carried out even if the treadle is depressed backward.
- If the indicator of the AUTO key (10) is illuminated, the sewing machine stops in the needle up position without thread trimming being carried out after the set number of stitches have been sewn.

4171M

(14) Half stitch key

When the sewing machine is stopped, the needle bar can be moved up and down by pressing this key.

4172M

(15) Lower thread counter display

This shows the lower thread counter value.
The counter is reduced by “1” for every ten stitches sewn.

2154M

(16) Lower thread counter keys

These keys are used to set the initial value for the lower thread counter. (Refer to “5-7. Using the lower thread counter”.)

4170M

(17) RESET key

This key is used to return the lower thread counter to its initial value and to cancel warning conditions. (Refer to “5-7. Using the lower thread counter”.)

4173M

(18) Thread wiper key

- When this key is pressed so that the indicator illuminates, the thread wiper (-4[][] specifications) operates. (Refer to “4-7. Using the thread wiper”.)
- When the indicator of the thread trimming lock key (13) is illuminated, the thread wiper key (18) is disabled.
- If you press the thread trimming lock key (13) so that its indicator illuminates while the indicator of the thread wiper key (18) is illuminated, the indicator of the thread wiper key (18) will switch off.

4174M

5-2. Sewing start and end backtack stitches

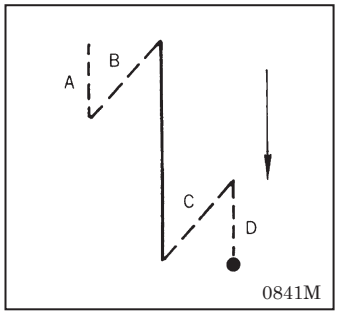

1 Setting start backtack stitches

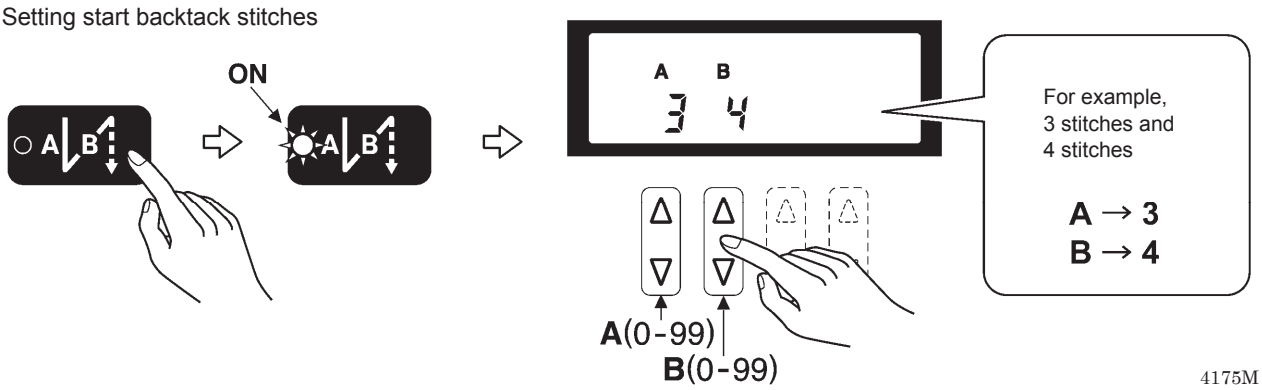

2 Setting end backtack stitches

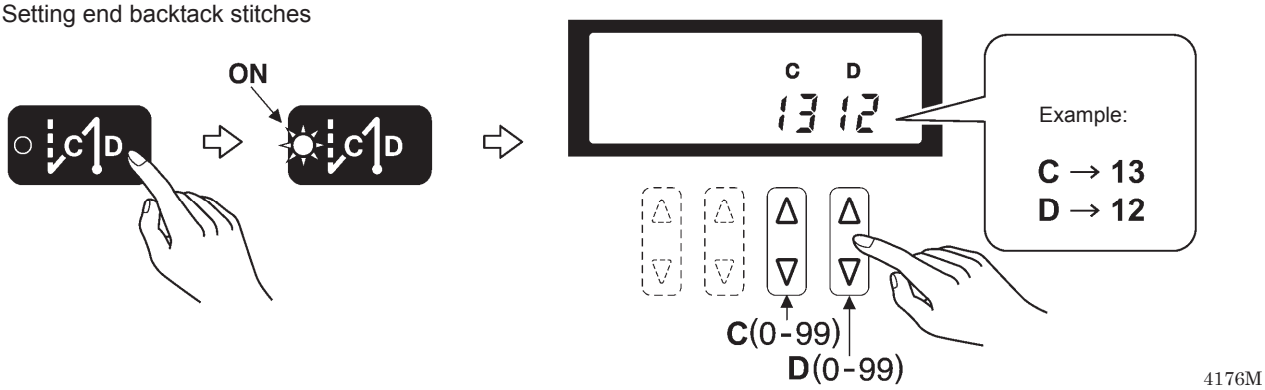

3

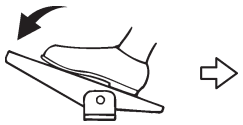

Start backtacking is carried out. After it has finished, normal sewing continues for as long as the treadle remains depressed.

NOTE:

If the treadle is returned to the neutral position, the sewing machine will continue operating until the set number of start backtack stitches has been sewn.

2159M

4

End backtacking is carried out. After it has finished, the thread is trimmed automatically and the sewing machine stops in the needle up position.

NOTE:

- If the treadle is depressed backward before sewing of the set number of start backtack stitches is complete, end backtacking will not be carried out.
- If the indicator of the thread trimming lock key is illuminated, the sewing machine will stop in the needle up position without thread trimming being carried out.

2160M

5-3. Sewing continuous backtack stitches

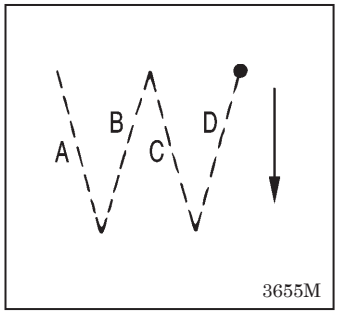

1 Setting continuous backtack stitches

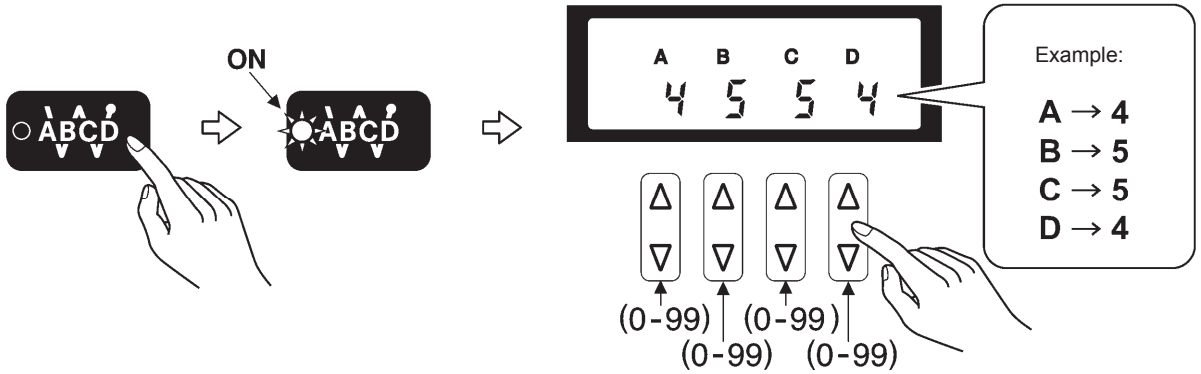

2

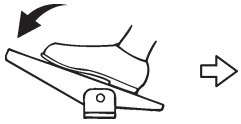

If the treadle is simply depressed continuously, the number of stitches set for A, B, C and D will be sewn in a single cycle, the thread will be trimmed automatically and then the needle bar will stop in the needle up position.

NOTE:

- If the treadle is returned to the neutral position while continuous backtacking is being carried out, the sewing machine will stop at the point where the treadle returns to the neutral position.If the treadle is depressed again, operation will resume from the point where it was interrupted.
- If the indicator of the thread trimming lock key is illuminated, the sewing machine will stop in the needle up position without thread trimming being carried out.

2159M

<Automatic sewing>

When the AUTO key is pressed to turn on the automatic sewing function, operation will be carried out automatically from continuous backtack sewing through to thread trimming just by depressing the treadle once, without needing to keep it depressed continuously.

5-4. Sewing fixed stitches

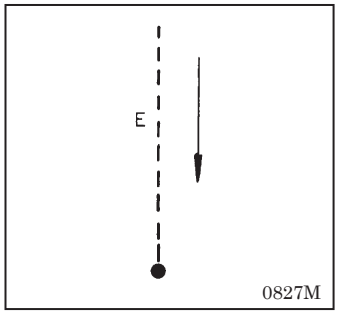

1 Setting the number of fixed stitches

4178M

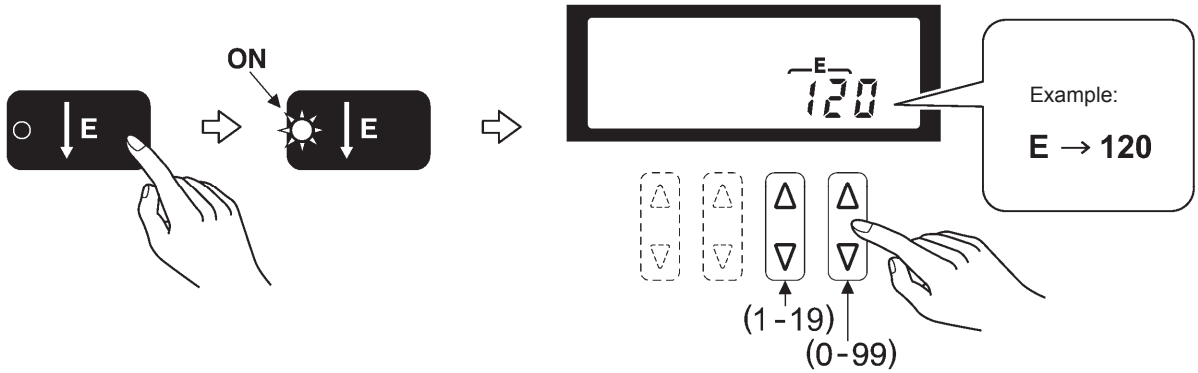

From 1 to 1999 stitches can be set.

2

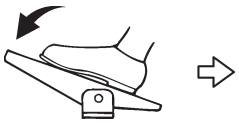

After the set number of stitches in E (fixed stitches) have been sewn, the sewing machine stops in the needle position that has been set by the needle up/down key (refer to p.27). After this, normal sewing is carried out if the treadle is depressed.

2159M

3

After the thread is trimmed, fixed stitch sewing mode is enabled.

2160M

<Automatic thread trimming>

Press the thread trimming key to turn on the thread trimming function. When the treadle is continuously depressed, thread trimming is carried out after the fixed stitches have been sewn.

<Automatic sewing>

When the AUTO key is pressed to turn on the automatic sewing function, the fixed stitches are sewn simply by depressing the treadle once without needing to depress it continuously.

<Start and end backtack sewing>

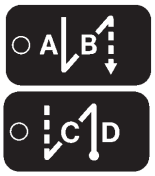

- The start backtack key and end backtack key can be pressed to turn on the backtack sewing function.
- If changing the number of end backtack stitches in C and D, press the fixed stitch key to temporarily turn off the fixed stitch function before making the change. (The CD display will show the number of stitches and the setting can then be changed.)

5-5. Sewing name labels

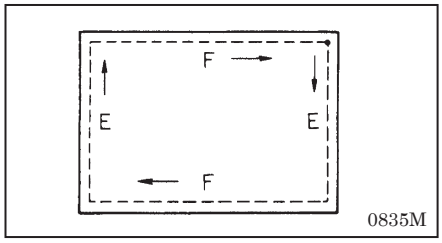

1 Setting the number of name label stitches

4179M

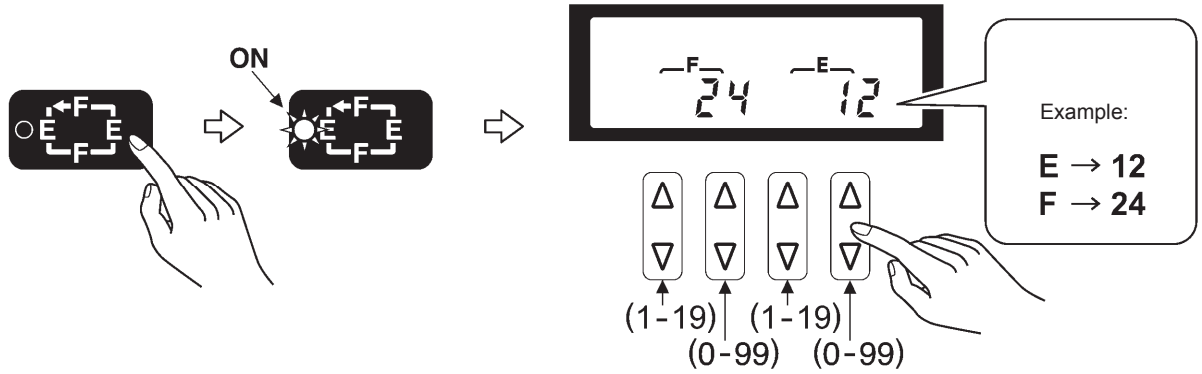

From 1 to 1999 stitches can be set for the E and F stitch numbers.

2 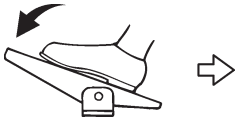

After the set number of stitches in E (fixed stitches) have been sewn, the needle bar stops in the position that has been set by the needle up/down key (refer to p.27).

2159M

3 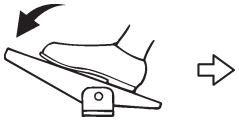

After the set number of stitches in F (fixed stitches) have been sewn, the needle bar stops in the position that has been set by the needle up/down key (refer to p.27).

4 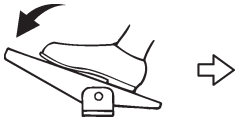

Repeat steps 2 and 3 above.

5

Thread trimming is carried out.

2160M

<If using a solenoid-type presser lifter>

After the fixed stitches in E and F are sewn, the presser foot is also lifted automatically.

<Automatic thread trimming>

Press the thread trimming key to turn on the thread trimming function. Thread trimming is carried out automatically after the second set of F stitches has been sewn.

<Automatic sewing>

When the AUTO key is pressed to turn on the automatic sewing function, the fixed stitches in E and F are sewn respectively simply by depressing the treadle once without needing to depress it continuously.

<Start and end backtack sewing>

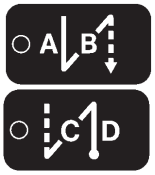

- The start backtack key and end backtack key can be pressed to turn on the backtack sewing function.
- If changing the number of start and end backtack stitches in A, B, C and D, press the name label stitch key to turn off the name label function before making the change. (The ABCD display will show the number of stitches and the settings can then be changed.)

5-6. Sewing pleat presser stitches

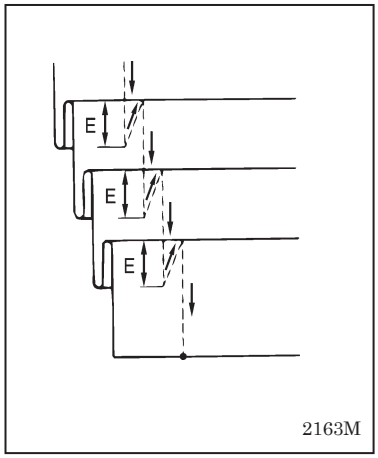

1

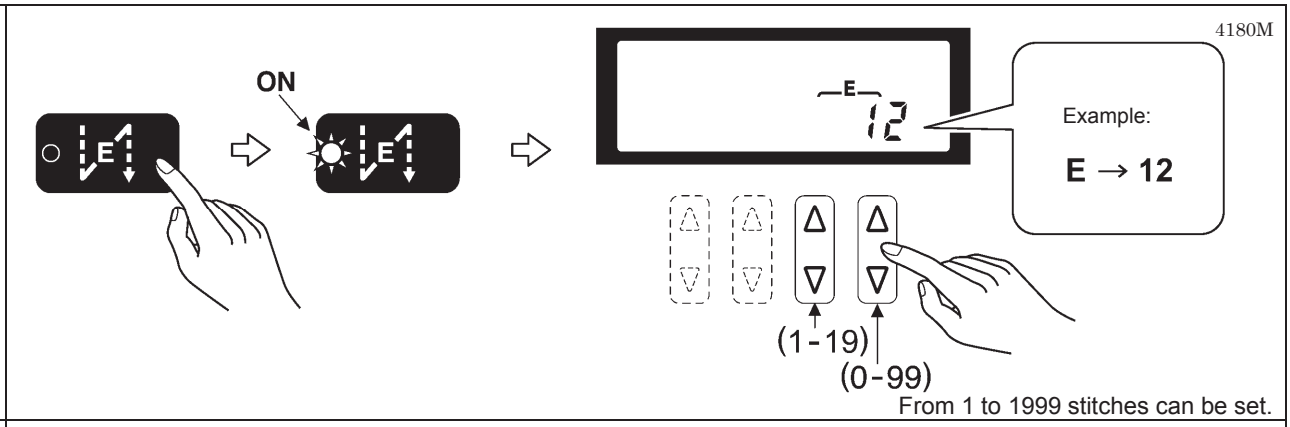

From 1 to 1999 stitches can be set.

2

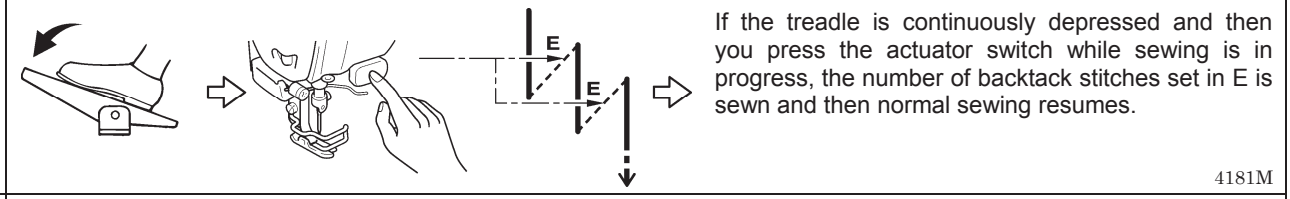

If the treadle is continuously depressed and then you press the actuator switch while sewing is in progress, the number of backtack stitches set in E is sewn and then normal sewing resumes.

3

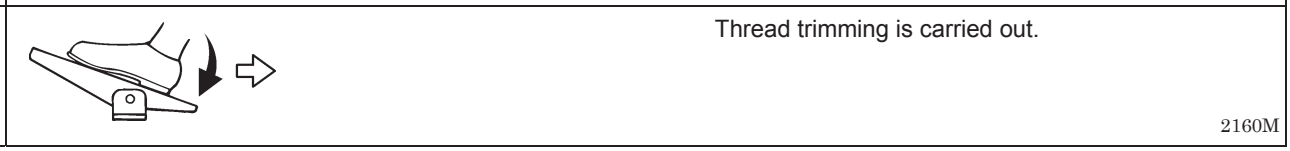

Thread trimming is carried out.

<Automatic sewing and automatic thread trimming>

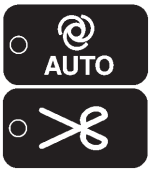

These functions cannot be used.

<Start and end backtack sewing>

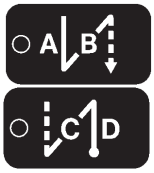

- The start backtack key and end backtack key can be pressed to turn on the backtack sewing function.
- If changing the number of end backtack stitches indicated in C and D, press the pleat presser sewing key to turn off the pleat presser sewing function before making the change. (The CD display will show the number of stitches and the setting can then be changed.)

5-7. Using the lower thread counter

- The lower thread counter can be used to let you know approximately how much lower thread is remaining.
- The value displayed by the lower thread counter display is reduced by 1 from the initial setting value each time the sewing machine sews 10 stitches, and a warning is given when the counter goes below“0”.

<Initial value setting>

1

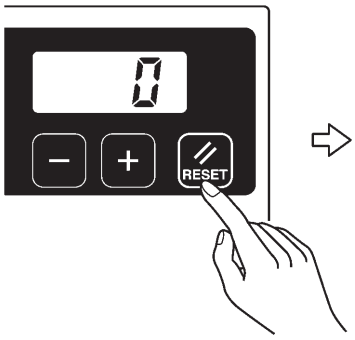

(Press for 2 seconds or more)

After about 2 seconds, the buzzer will sound and the lower thread counter display will show the initial value which was set previously.

4182M

2

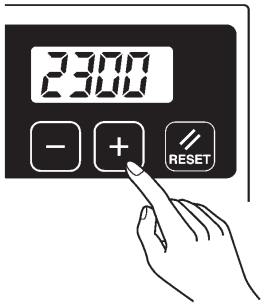

- When the + key is pressed, the setting increases.
- When the - key is pressed, the setting decreases.
- If you hold down the keys, the setting will change more quickly.
- If a value of “0” is set, the lower thread counter will not operate.
- The initial setting value will be accepted when sewing starts.

4183M

<Lower thread counter operation>

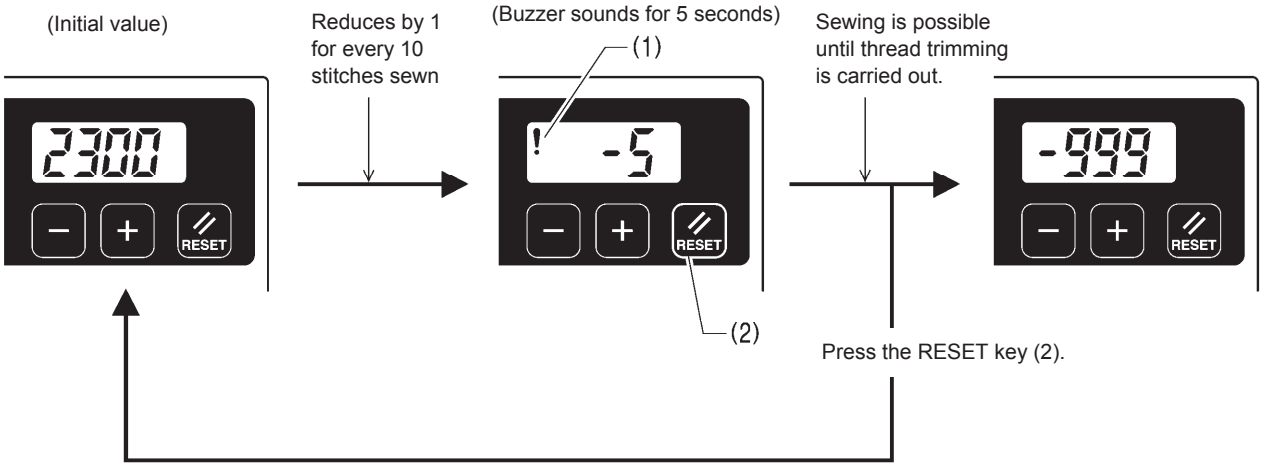

4184M

1. When sewing is carried out, the value shown in the lower thread counter display is reduced by 1 for every 10 stitches sewn. (When the value goes below zero (“0”), a minus sign appears and counting continues to a maximum of “-999”.)
2. When the value goes below “0”, a warning icon (1) illuminates and an electronic buzzer sounds for 5 seconds.
3. Sewing will be possible even after the treadle is returned to the neutral position and the sewing machine stops. However, after the treadle has been depressed backward and thread trimming has been carried out, sewing using the treadle will no longer be possible.
4. When the RESET key (2) is pressed, the warning icon (1) will switch off and the display will return to showing the initial values. Sewing using the treadle will then be possible.

6. USING THE G50 OPERATION PANEL (ADVANCED OPERATIONS)

The operations described in this section should only be carried out by a technician.

6-1. Names and functions

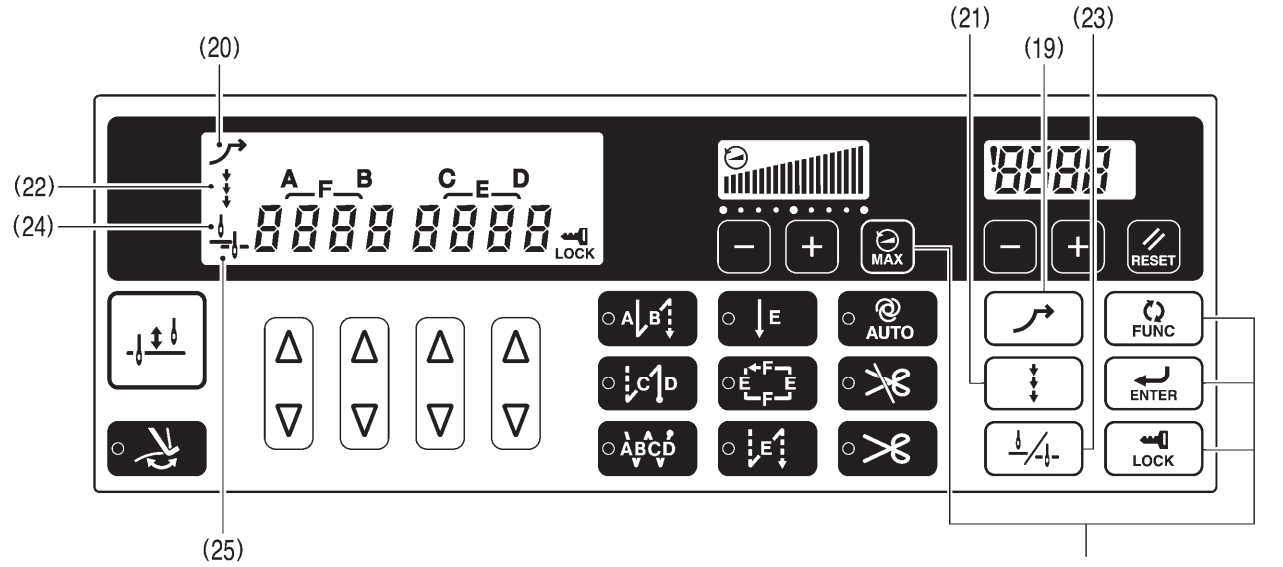

These are used for making advanced operating settings.
They should only be used by a technician.

4185M

(19) Slow start key

- When this key is pressed so that the slow start icon (20) illuminates, the first two stitches sewn after the thread is trimmed are sewn at 700 rpm. After this, the sewing speed corresponds to the treadle depression amount.
- If you press this key again while the icon (20) is illuminated, the icon (20) will turn off.

4186M

(21) Correction key

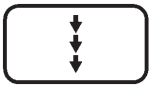

- When this key is pressed so that the correction icon (22) illuminates, correction sewing can be carried out.
  If the sewing machine is stopped, sewing will be carried out at slow speed (220 rpm) while the actuator switch is being pressed.
  NOTE:
  - If you press the actuator switch while sewing is in progress, backtack stitches will be sewn.
  - Correction sewing cannot be carried out while the indicator of the pleat presser sewing key (8) is illuminated.
- If you press this key again while the icon (22) is illuminated, the icon (22) will turn off.

4187M

(23) Needle up/down key

Use this key to select whether the needle bar stops in the up position or the down position when the treadle is returned to the neutral position and sewing stops.

- When the needle up icon (24) is illuminated, the needle bar stops in the up position.
- When the needle down icon (25) is illuminated, the needle bar stops in the down position.

4188M 2207M 2208M

6-2. Adjusting the needle up stop position

1

4189M

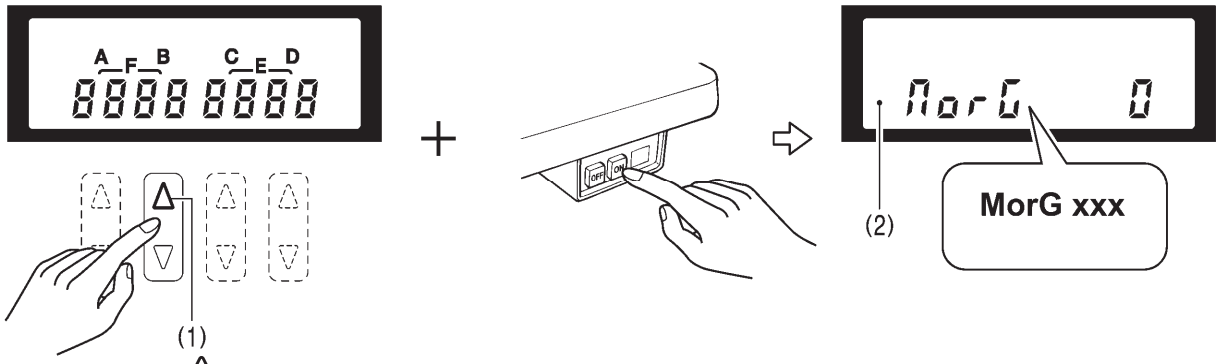

(While pressing the △ key (1), press the power ON switch.)

"MorG xxx" will appear in orange in the main display (2).

2

Selecting "UpoS xxx"

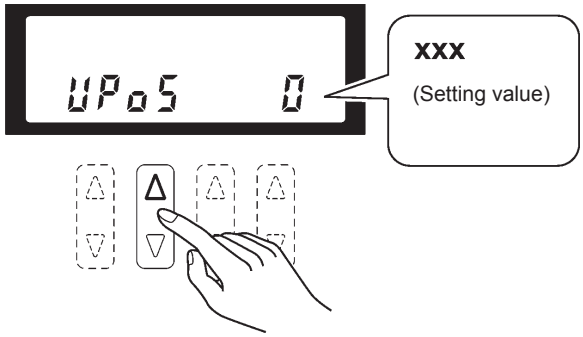

(Press once)

"xxx" is the setting value for the needle up stop position, and "0" is the default setting.

4190M

3

Needle up stop position setting

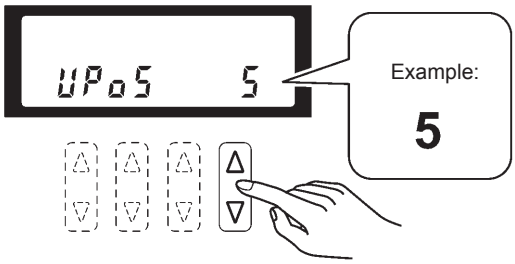

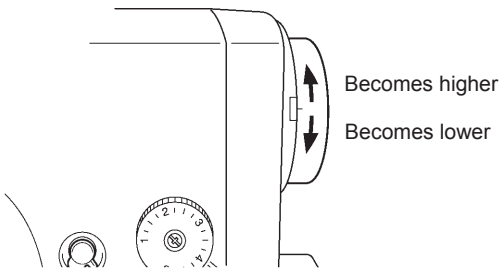

- If you press the △ key, the setting value will increase and the needle up stop position will become lower.
- If you press the ▽ key, the setting value will decrease and the needle up stop position will become higher.
- The setting range is from –10 to 10.

* A setting value of "10" corresponds to an angle of rotation of approximately 10° for the upper shaft.

4191M 2138M 2139M

4

The setting values will be memorized.

4192M

5

Normal sewing machine operation will then be possible.

4193M

* For details on other adjustment items, refer to the Service Manual.

6-3. LOCK key

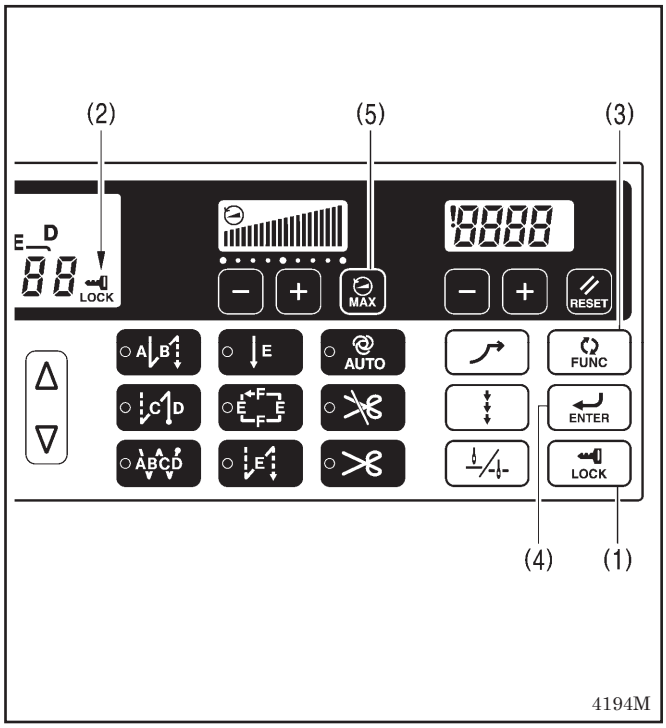

When the power switch is turned on, the LOCK key (1) turns ON. (The icon (2) is illuminated.)
In this state, the following three key operations are disabled so that the setting values cannot be changed accidentally.

FUNC key (3)
This key is used to make settings for various functions.

ENTER key (4)
This key is used to accept function settings.

MAX key (5)
This key is used to change the maximum sewing speed.

* Refer to the Service Manual for details on using these keys.

6-4. Resetting all settings to their defaults

If the sewing machine stops operating normally, the cause may be that an incorrect setting may have been made for the memory data by means of memory switches, for instance. In such cases, it may be possible to restore normal operation by following the steps given below to initialize the memory setting data.

1 Activating initialization mode

4195M

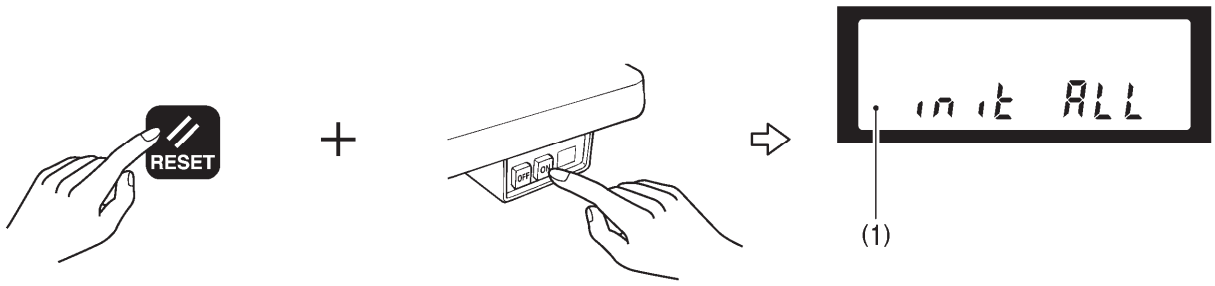

While pressing the RESET key, press the power ON switch.

"init ALL" will appear in orange in the main display (1).

Reference

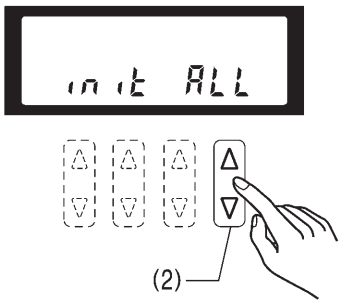

If the △▽ keys (2) are pressed at this time, you can select the items to be initialized as shown below.。

* For details on initialization items other than "init ALL", refer to the Service Manual.

Main display	Initialization items
" **init ALL** "	Clears all settings
" **init MEM** "	Initializes memory switches
" **init SPd** "	Initializes sewing speed
" **init SEW** "	Initializes programs

4196M

2

(Press for 2 seconds or more)

Once initialization is complete, the main display will return to green.

4192M

3

Initialization mode will be exited and normal sewing machine operation will then be possible.

4193M

7. USING THE G10 OPERATION PANEL (BASIC OPERATIONS)

7-1. Names and functions

- The operation panel keys cannot be operated while sewing is in progress.
  Select the keys and set the number of stitches before starting sewing.
- In the case of keys with indicators, the indicator illuminates when that function is operating, and the indicator switches off when the key is pressed once more.

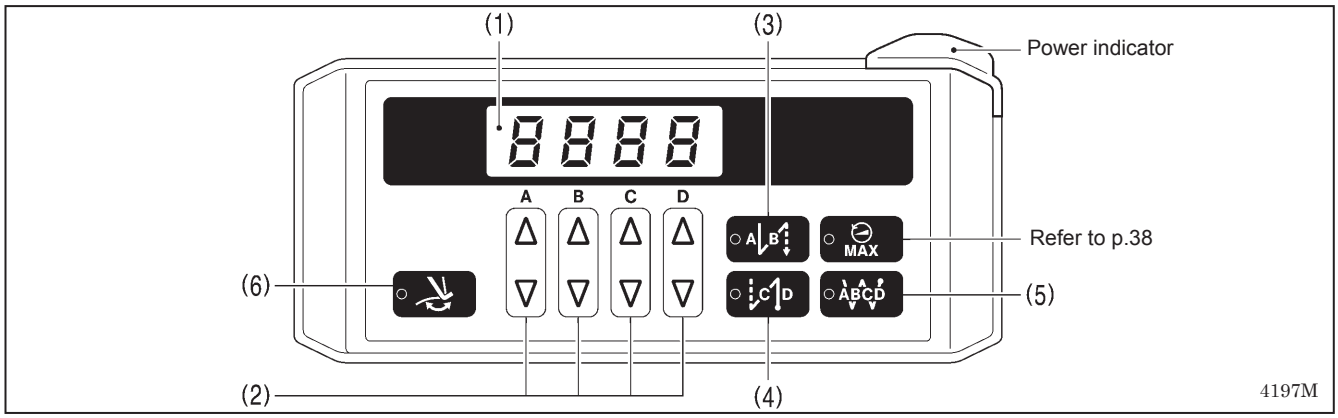

The power indicator illuminates when the power switch is turned on.

(1) Display

- When start backtack stitches are being displayed, the indicator of the start backtack key (3) will illuminate, and the number of A stitches will appear in the A column and the number of B stitches will appear in the B column.
- When end backtack stitches are being displayed, the indicator of the end backtack key (4) will illuminate, and the number of C stitches will appear in the C column and the number of D stitches will appear in the D column.
- When continuous backtack stitches are displayed, the indicator of the continuous backtack key (5) will illuminate, and the number of A, B, C and D stitches will appear in order starting from the left column of the display.

4198M

(2) Setting keys

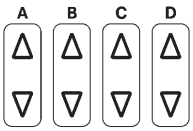

These keys are used to set the number of backtack stitches for A, B, C and D.
- When the △ key is pressed, the setting increases from 0 up to 9.
- When the ▽ key is pressed, the setting decreases from 9 down to 0.

4199M 2138M 2139M

(3) Start backtack key

When this key is pressed so that the indicator illuminates, the number of start backtack stitches (0 - 9) in the A and B columns of the display are sewn.

4161M

(4) End backtack key

When this key is pressed so that the indicator illuminates, the number of end backtack stitches (0 - 9) in the C and D columns of the display are sewn. When the treadle is depressed backward, the end backtack stitches are sewn and then the thread is trimmed automatically.
If the treadle has not yet been depressed backward, the end backtack function can be set to ON, the number of stitches can be changed and the function can be set back to OFF.

4162M

(5) Continuous backtack key

When this key is pressed so that the indicator illuminates, the number of backtack stitches (0 - 9) in the A, B, C and D columns of the display are sewn continuously. After the sewing machine sews a full cycle of stitches set by A, B, C and D, the thread is trimmed automatically.

4163M

(6) Thread wiper key

- When this key is pressed so that the indicator illuminates, the thread wiper (-4[][] specifications) operates. (Refer to “4-7. Using the thread wiper”.)
- If the thread trimming lock has been set, the thread wiper key (6) will be disabled. (For details on the thread trimming lock, refer to “8-4. Thread trimming lock”.)
- If thread trimming lock is set when the indicator of this key is illuminated, the indicator of the thread wiper key (6) will switch off.

4174M

7-2. Sewing start and end backtack stitches

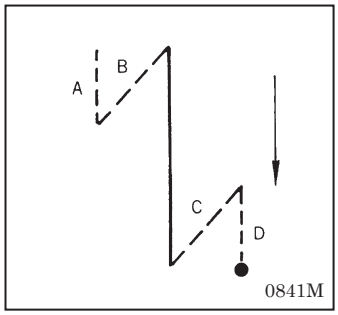

1 Setting start backtack stitches

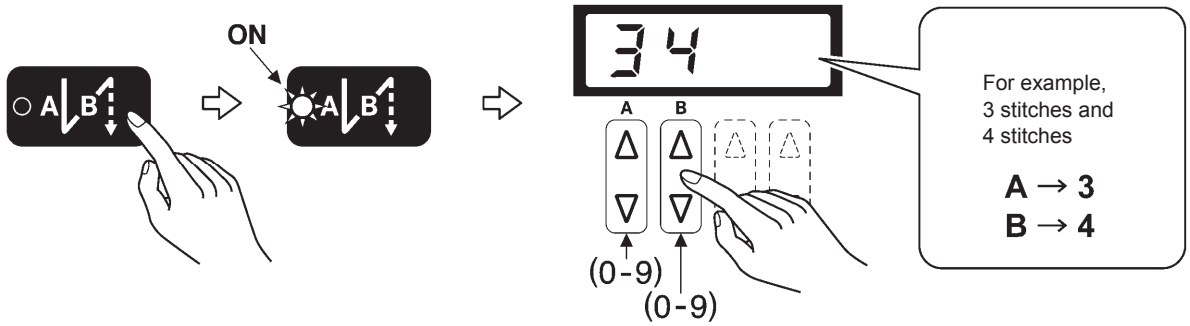

4200M

2 Setting end backtack stitches

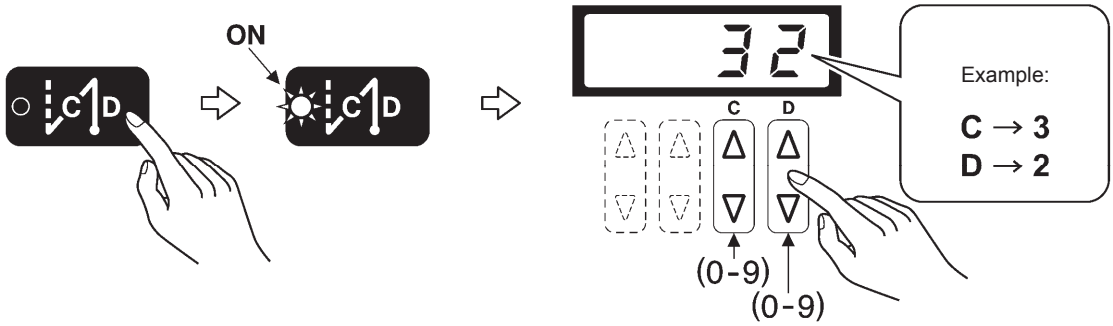

4201M

3

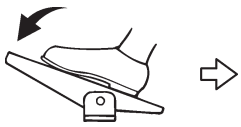

Start backtacking is carried out. After it has finished, normal sewing continues for as long as the treadle remains depressed.

NOTE:

If the treadle is returned to the neutral position, the sewing machine will continue operating until the set number of start backtack stitches has been sewn.

2159M

4

End backtacking is carried out. After it has finished, the thread is trimmed automatically and the sewing machine stops in the needle up position.

NOTE:

- If the treadle is depressed backward before sewing of the set number of start backtack stitches is complete, end backtacking will not be carried out.
- If thread trimming lock is set, the sewing machine will stop in the needle up position without thread trimming being carried out.

2160M

7-3. Sewing continuous backtack stitches

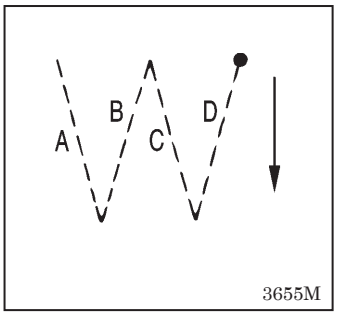

1 Setting continuous backtack stitches

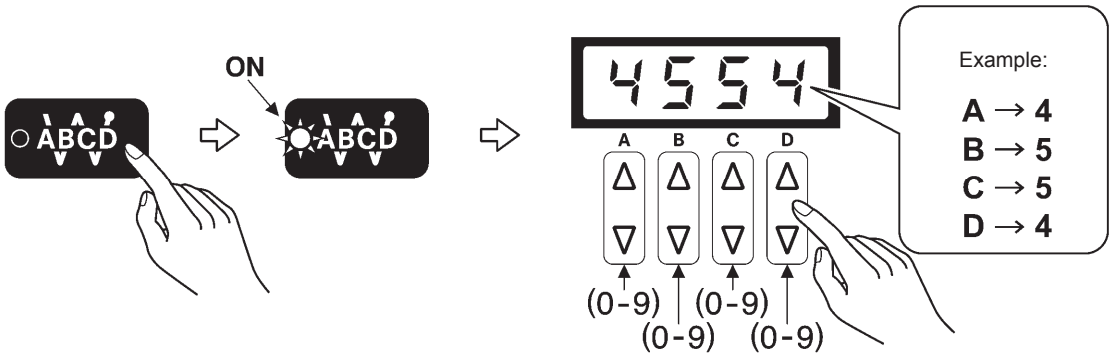

4202M

2

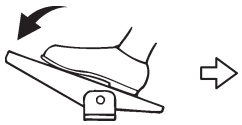

If the treadle is simply depressed continuously, the number of stitches set for A, B, C and D will be sewn in a single cycle, the thread will be trimmed automatically and then the needle bar will stop in the needle up position.

NOTE:

- If the treadle is returned to the neutral position while continuous backtacking is being carried out, the sewing machine will stop at the point where the treadle returns to the neutral position.If the treadle is depressed again, operation will resume from the point where it was interrupted.
- If thread trimming lock is set, the sewing machine will stop in the needle up position without thread trimming being carried out.

2159M

8. USING THE G10 OPERATION PANEL (ADVANCED OPERATIONS)

The operations described in this section should only be carried out by a technician.

8-1. Changing the needle stop position

This sets whether the needle bar stops in the needle up stop position or the needle down stop position when the treadle is returned to the neutral position and sewing stops.

* This setting cannot be carried out if the lock function is on. (For details on turning the lock function off, refer to “8-7. Lock function”.)

1 Activating setting mode

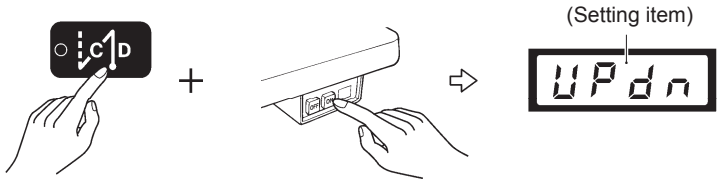

(While pressing the end backtack key, press the power ON switch.)

4203M

2 Setting the needle up stop and needle down stop positions

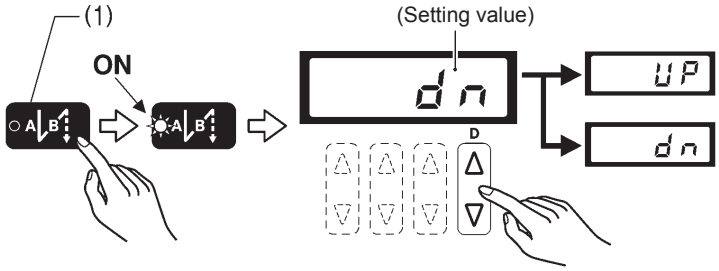

- When the △ key is pressed, the “UP” display will appear.
- When the ▽ key is pressed, the “dn” display will appear.

... Needle up stop

... Needle down stop

NOTE:
If the start backtack key (1) is pressed once more, the start backtack indicator will switch off and the display will return to the setting item.

4204M 2138M 2139M

3

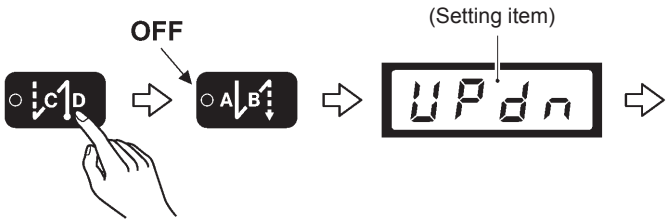

The setting will be stored and the display will return to the setting item.

4205M

4

Setting mode will be exited and normal operation will be possible.

4206M

8-2. Slow start

When the slow start setting is enabled, the two stitches at the sewing start after thread trimming will be sewn at 700 rpm. After this, the sewing speed corresponds to the treadle depression amount.

* This setting cannot be carried out if the lock function is on. (For details on turning the lock function off, refer to “8-7. Lock function”.)

1 Activating setting mode

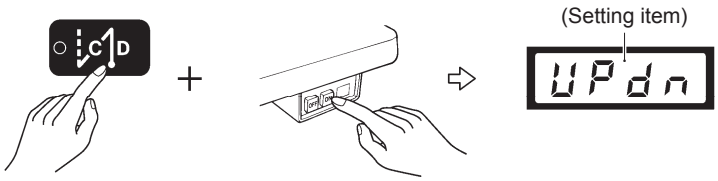

(While pressing the end backtack key, press the power ON switch.)

4203M

2 Selecting “SloW” (slow start)

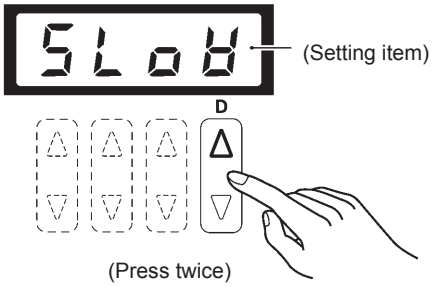

4207M

3 Enabling and disabling slow start

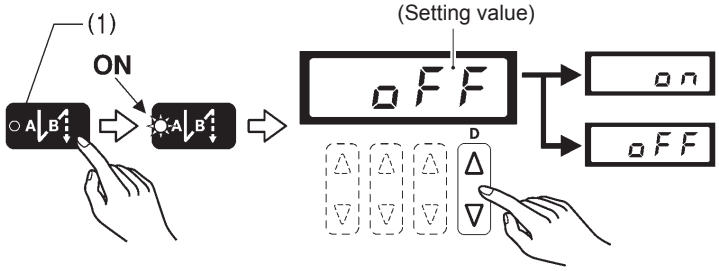

- When the △ key is pressed, the “on” display will appear.
- When the ▽ key is pressed, the “oFF” display will appear.

... Slow start enabled

... Slow start disabled

NOTE:
If the start backtack key (1) is pressed once more, the start backtack indicator will switch off and the display will return to the setting item.

4208M 2138M 2139M

4

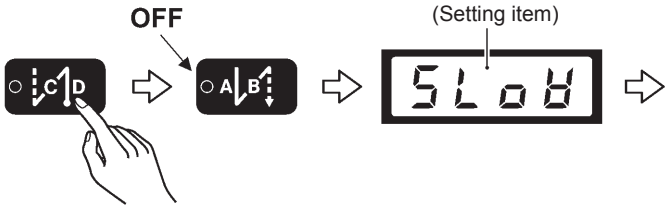

The setting will be stored and the display will return to the setting item.

4209M

5

Setting mode will be exited and normal operation will be possible.

4206M

8-3. Correction sewing

When correction sewing is enabled, sewing will be carried out at slow speed (220 rpm) while the actuator switch is being pressed when the sewing machine is stopped.

* This setting cannot be carried out if the lock function is on. (For details on turning the lock function off, refer to “8-7. Lock function”.)

1 Activating setting mode

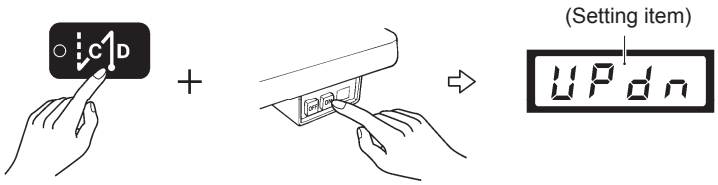

(While pressing the end backtack key, press the power ON switch.)

4203M

2 Selecting “Corr” (correction sewing)

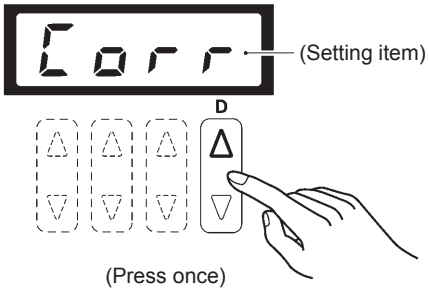

4210M

3 Enabling and disabling correction sewing

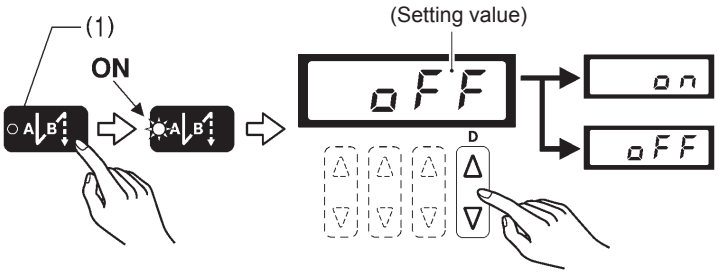

- When the △ key is pressed, the “on” display will appear.
- When the ▽ key is pressed, the “oFF” display will appear.

... Correction sewing enabled

... Correction sewing disabled

NOTE:
If the start backtack key (1) is pressed once more, the start backtack indicator will switch off and the display will return to the setting item.

4208M 2138M 2139M

4 The setting will be stored and the display will return to the setting item.

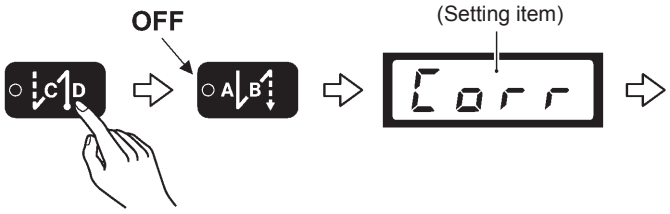

4211M

5 Setting mode will be exited and normal operation will be possible.

4206M

8-4. Thread trimming lock

Thread trimming not locked	Thread trimming locked
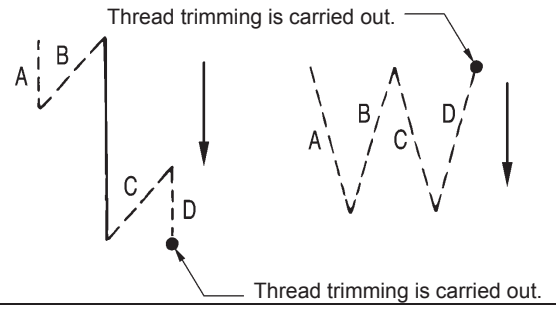	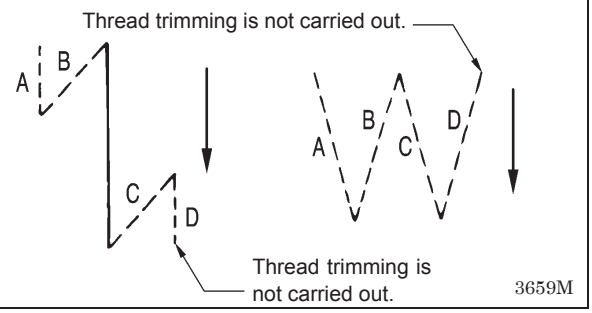

<Setting method>

* This setting cannot be carried out if the lock function is on. (For details on turning the lock function off, refer to “8-7. Lock function”.)

1 Activating setting mode

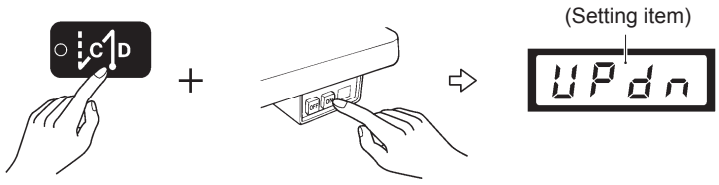

(While pressing the end backtack key, press the power ON switch.)

4203M

2 Selecting “trdi” (thread trimming lock)

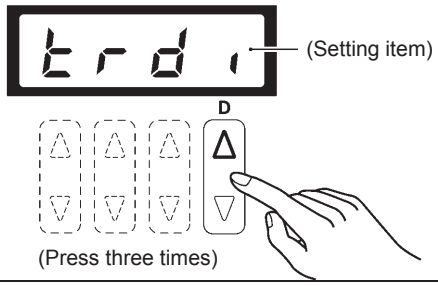

4212M

3 Enabling and disabling thread trimming lock

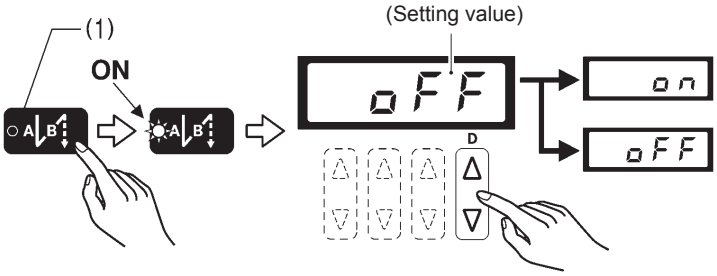

- When the △ key is pressed, the “on” display will appear.
- When the ▽ key is pressed, the “oFF” display will appear.

... Thread trimming locked

... Thread trimming not locked

NOTE:
If the start backtack key (1) is pressed once more, the start backtack indicator will switch off and the display will return to the setting item.

4208M 2138M 2139M

4 The setting will be stored and the display will return to the setting item.

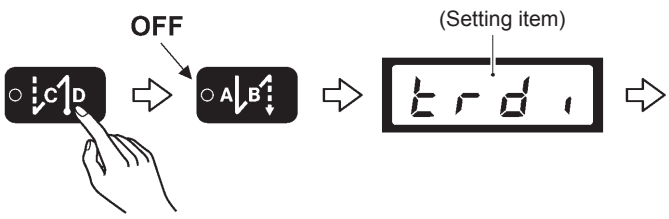

4213M

5 Setting mode will be exited and normal operation will be possible.

4206M

8-5. Setting the maximum sewing speed

- The maximum sewing speed can be set to a speed from 220 rpm up to the maximum sewing speed which is set for the head detector unit.
- If the treadle is depressed as far as it will go, sewing will be carried out at the maximum sewing speed which is set here.
  - * This setting cannot be carried out if the lock function is on. (For details on turning the lock function off, refer to “8-7. Lock function”.)

1

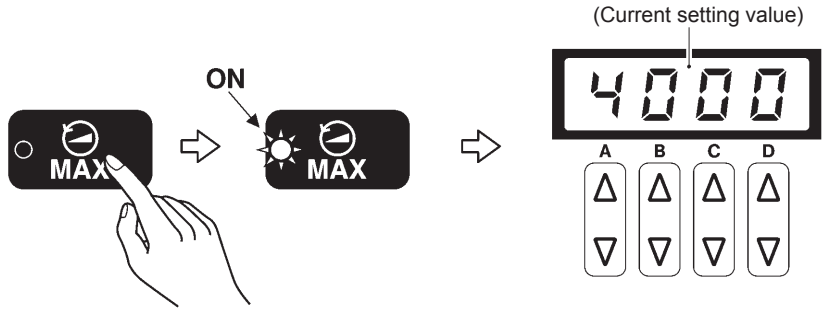

4214M

2

Setting the maximum sewing speed

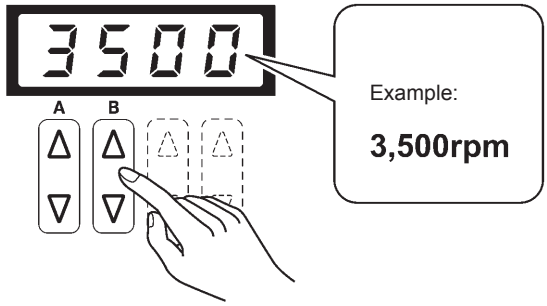

The maximum sewing speed is set in columns A and B. (Setting can be carried out in units of 100 rpm.)

- When the △ key is pressed, the setting increases.
- When the ▽ key is pressed, the setting decreases.

4215M 2138M 2139M

3

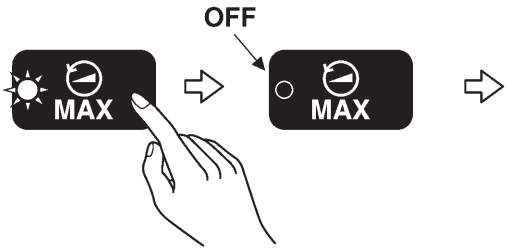

The display will return to what was shown before the MAX key was pressed.

4216M

NOTE:

While the indicator of the MAX key is illuminated, all keys other than the △▽ keys for the A and B columns will be disabled.
If the MAX key is pressed once more, the indicator of the MAX key will switch off and normal key operations can then be carried out.

8-6. Adjusting the needle up stop position

1

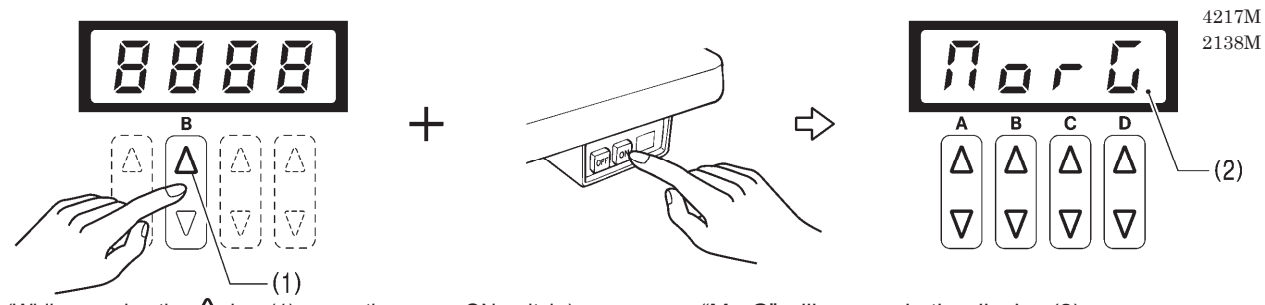

(While pressing the △ key (1), press the power ON switch.)

"MorG" will appear in the display (2).

2

Selecting "UPoS"

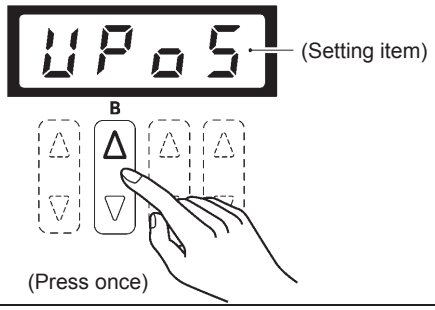

3

Needle up stop position setting

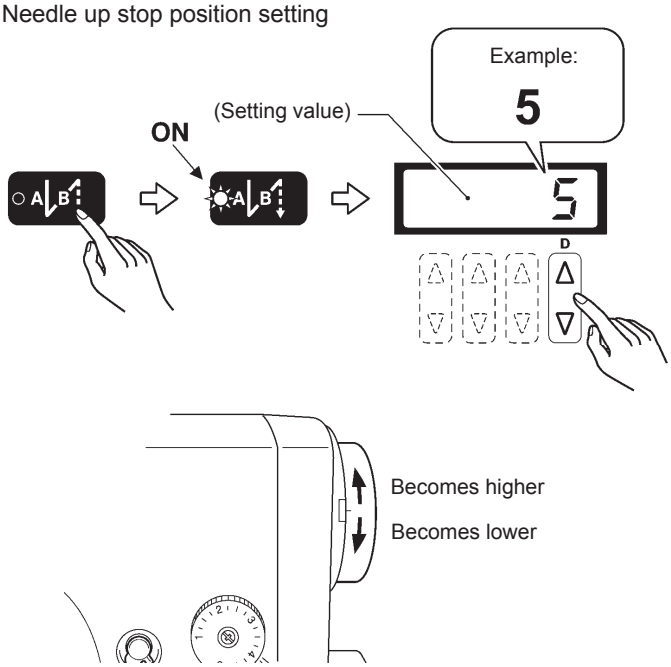

- If you press the △ key, the setting value will increase and the needle up stop position will become lower.
- If you press the ▽ key, the setting value will decrease and the needle up stop position will become higher.
- The setting range is from –10 to 10.

* A setting value of "10" corresponds to an angle of rotation of approximately 10° for the upper shaft.

4

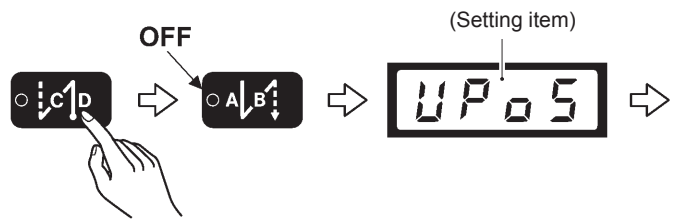

The setting will be stored and the display will return to the setting item.

5

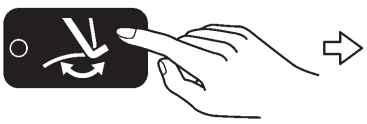

Normal sewing machine operation will then be possible.

* For details on other adjustment items, refer to the Service Manual.

8-7. Lock function

⚠ DANGER

Wait at least 5 minutes after turning off the power switch and disconnecting the power cord from the wall outlet before opening the cover of the control box. Touching areas where high voltages are present can result in severe injury.

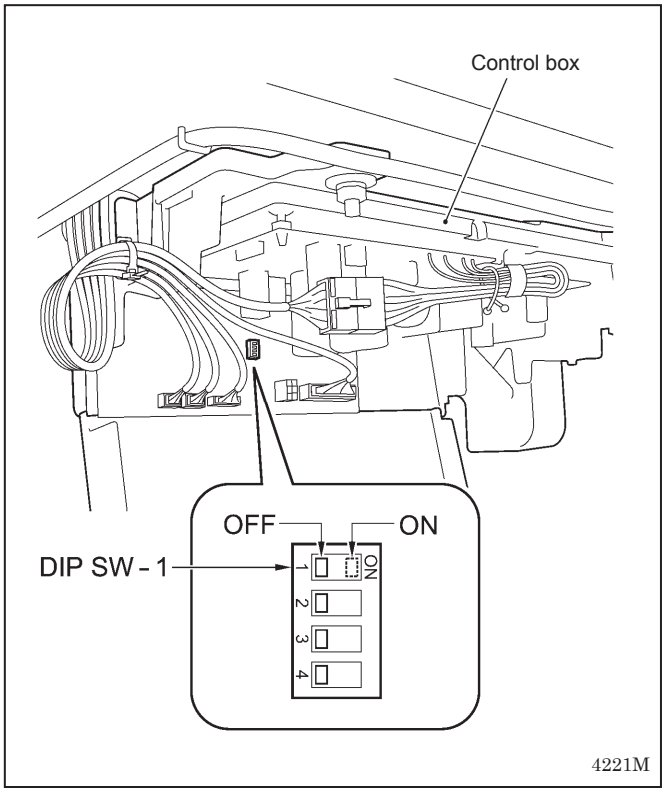

When the lock function is set to “ON”, the key operations for making settings such as the following will be disabled in order to prevent these settings from being accidentally changed.

(Examples of disabled key operations)

- Changing the needle stop position
- Slow start
- Correction sewing…… etc.

< To turn on the lock function >
Set DIP switch 1 to ON.

< To turn off the lock function >
Set DIP switch 1 to OFF. (The lock will be canceled and the functions can then be set.)

8-8. Resetting all settings to their defaults

If the sewing machine stops operating normally, the cause may be that an incorrect setting may have been made for the memory data by means of memory switches, for instance. In such cases, it may be possible to restore normal operation by following the steps given below to initialize the memory setting data.

* This setting cannot be carried out if the lock function is on. (For details on turning the lock function off, refer to “8-7. Lock function”.)

1 Activating initialization mode

4222M

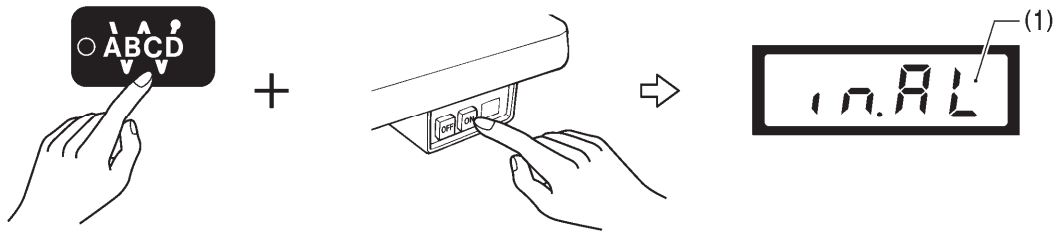

(While pressing the continuous backtack key, press the power ON switch.)

“in.AL” will appear in the display (1).

2

(Press for 2 seconds or more)

Once initialization is complete, the “in.AL” appearing in the display (1) will disappear and normal sewing machine operation will then be possible.

4206M

9. SEWING

⚠ CAUTION

- Attach all safety devices before using the sewing machine. If the machine is used without these devices attached, injury may result.
- Turn off the power switch at the following times.
  The machine may operate if the treadle is depressed by mistake, which could result in injury.
  - When threading the needle
  - When replacing the bobbin and needle
  - When not using the machine and when leaving the machine unattended
- Do not touch any of the moving parts or press any objects against the machine while sewing, as this may result in personal injury or damage to the machine.
- Secure the table so that it will not move when tilting back the machine head. If the table moves, it may crush your feet or cause other injuries.
- Use both hands to hold the machine head when tilting it back or returning it to its original position. If only one hand is used, the weight of the machine head may cause your hand to slip, and your hand may get caught.

9-1. Sewing

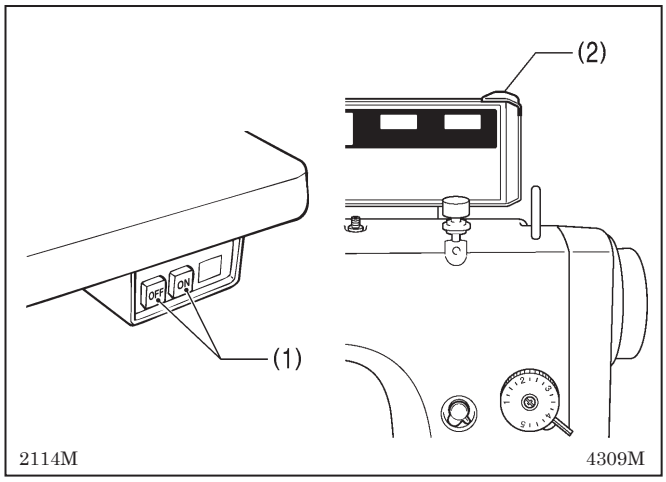

1. Press the power ON switch (1).
   The power indicator (2) will illuminate.
2. Carry out the programming which is necessary for sewing. (Refer to “Using the operation panel”.)
3. Depress the treadle to start sewing.

9-2. Backtacking

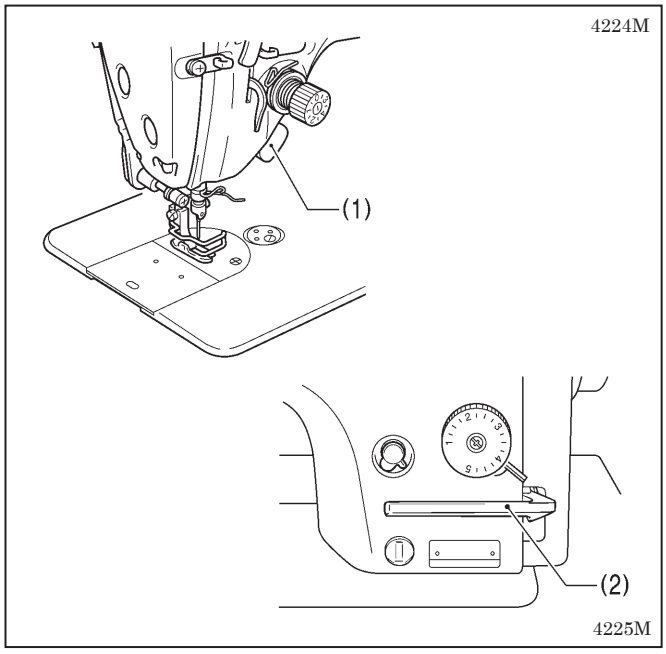

When the actuator switch (1) or the reverse lever (2) is pressed during sewing, the feed direction will be reversed. When it is released, the feed direction will return to normal.

9-3. Sewing condensed stitches

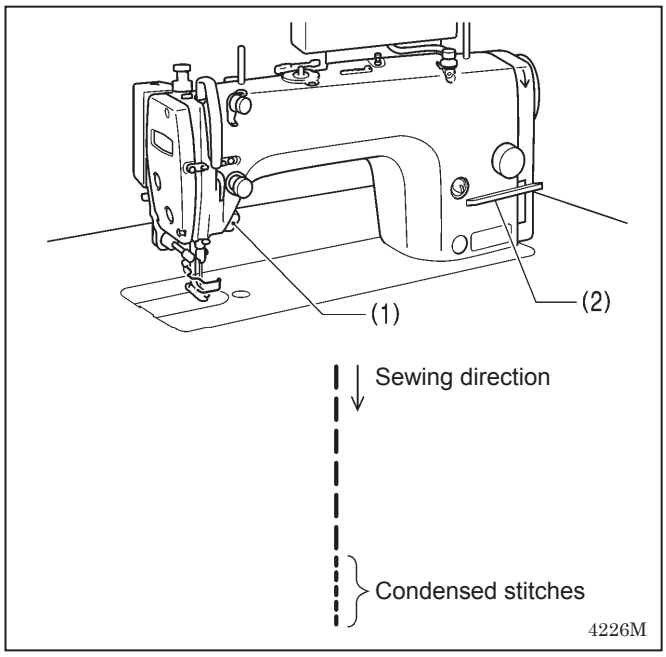

- If you press the actuator switch (1) or the reverse lever (2) while sewing is in progress, you can sew stitches (forward direction) with small stitch lengths.
- Before carrying out sewing, set the stitch length for condensed stitches as follows.

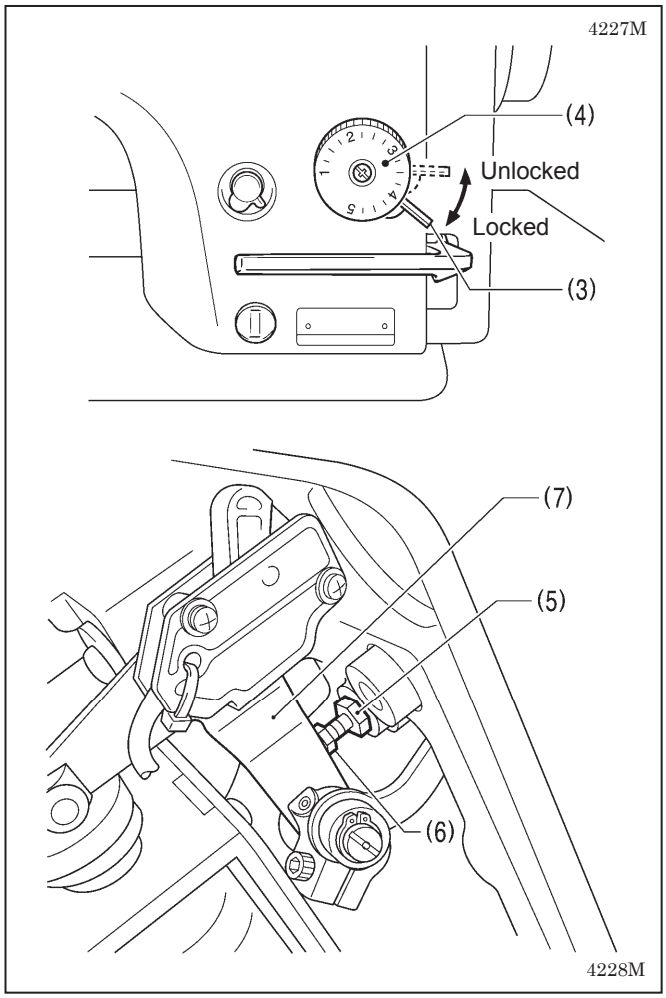

<Setting>

1. Lift up the dial lock lever (3) to release the lock.
2. Turn the stitch length dial (4) to the stitch length to be used for condensed stitches.
3. Tilt back the machine head.
4. Loosen the nut (5) and then turn the bolt (6) until its head is touching the solenoid lever (7).
5. Tighten the nut (5) to secure the bolt (6).
6. Return the machine head to its normal position.

<Sewing>

1. Return the stitch length dial (4) to the stitch length for normal sewing.
2. Push down the dial lock lever (3) to engage the lock.
3. Start sewing.
4. At the position where you would like to start sewing condensed stitches, press the actuator switch (1) or the reverse lever (2).
   (Condensed stitches are sewn while the actuator switch (1) or reverse lever (2) is being pressed.)

* To stop sewing condensed stitches, tighten the bolt (6) so that its head is not touching the solenoid lever (7).

10. THREAD TENSION

10-1. Adjusting the thread tension

⚠ CAUTION

Turn off the power switch before removing or inserting the bobbin case.
The machine may operate if the treadle is depressed by mistake, which could result in injury.

Good even stitches

0572M

0573M	Upper thread tension too weak or lower thread tension too strong	→ Increase the upper thread tension. Decrease the lower thread tension.
0574M	Upper thread tension too strong or lower thread tension too weak	→ Decrease the upper thread tension. Increase the lower thread tension.

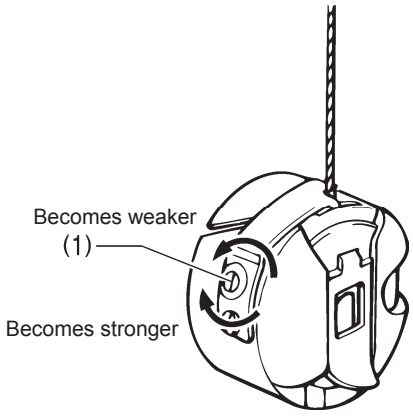

2177M

<Lower thread tension>

Adjust by turning the adjustment screw (1) until the bobbin case drops gently by its own weight while the thread end coming out of the bobbin case is held.

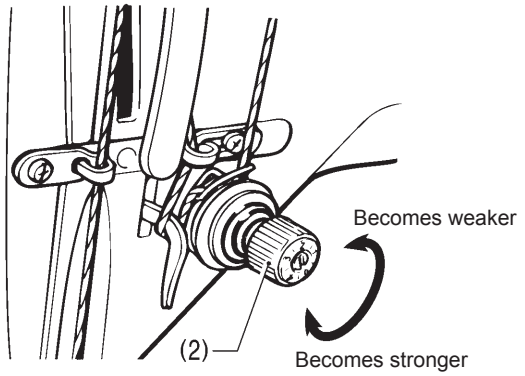

4229M

<Upper thread tension>

After the lower thread tension has been adjusted, adjust the upper thread tension so that a good, even stitch is obtained.

1. Lower the presser foot.
2. Adjust by turning the tension nut (2).

10-2. Adjusting the presser foot pressure

Correct stitches

Skipped stitches occur

Uneven stitch length

→ Increase the pressure.

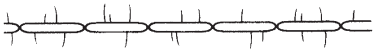

Stitches are puckered

→ Decrease the pressure.

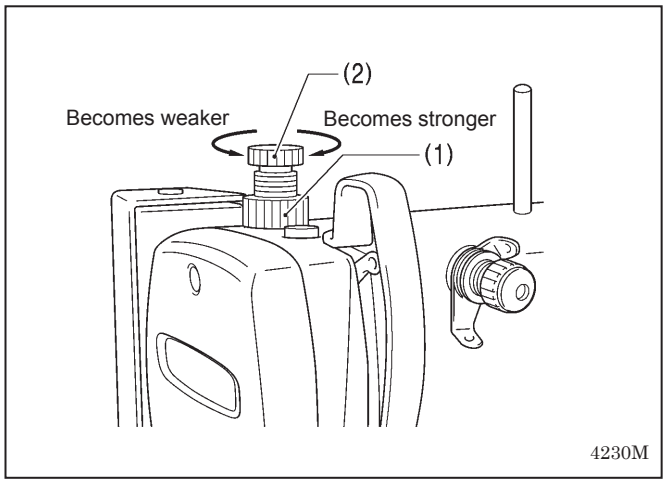

The presser foot pressure should be as weak as possible, but strong enough so that the material does not slip.

1. Loosen the adjusting nut (1).
2. Turn the presser adjusting screw (2) to adjust the presser foot pressure.
3. Tighten the adjusting nut (1).

10-3. Adjusting the trailing length after thread trimming

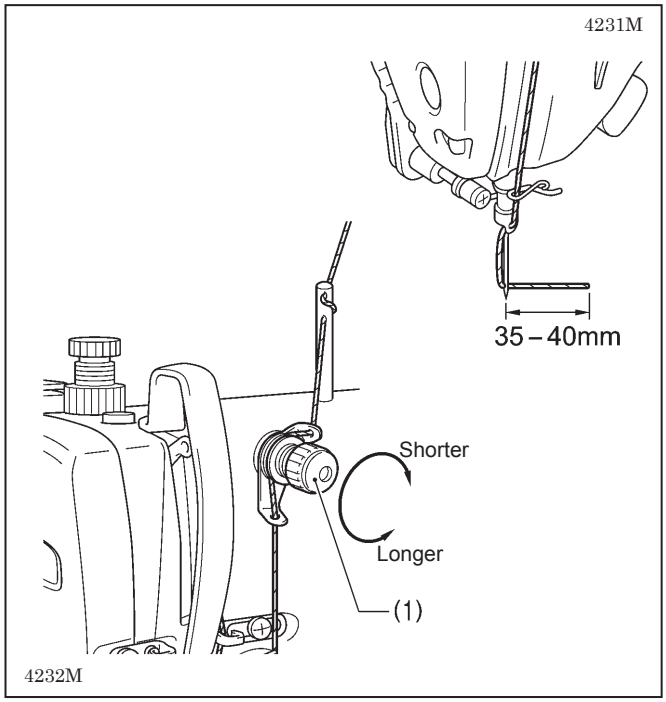

- At the time of thread trimming, the thread tension is loosened and tension is applied by the pretension (1) only.
- The standard trailing length for the upper thread is 35-40 mm.
- If the tension of the pretension (1) is increased, the lengths of the threads trailing from the needle tips will be reduced; if the tension is reduced, the lengths will be increased.

Adjust by turning the pretension (1).

10-4. Adjusting the thread take-up amount (-[][]3 specifications)

⚠ CAUTION

Turn off the power switch before carrying out this operation.
The machine may operate if the treadle is depressed by mistake, which could result in injury.

NOTE:
Do not use this function with models that are not -[][]3 specifications.

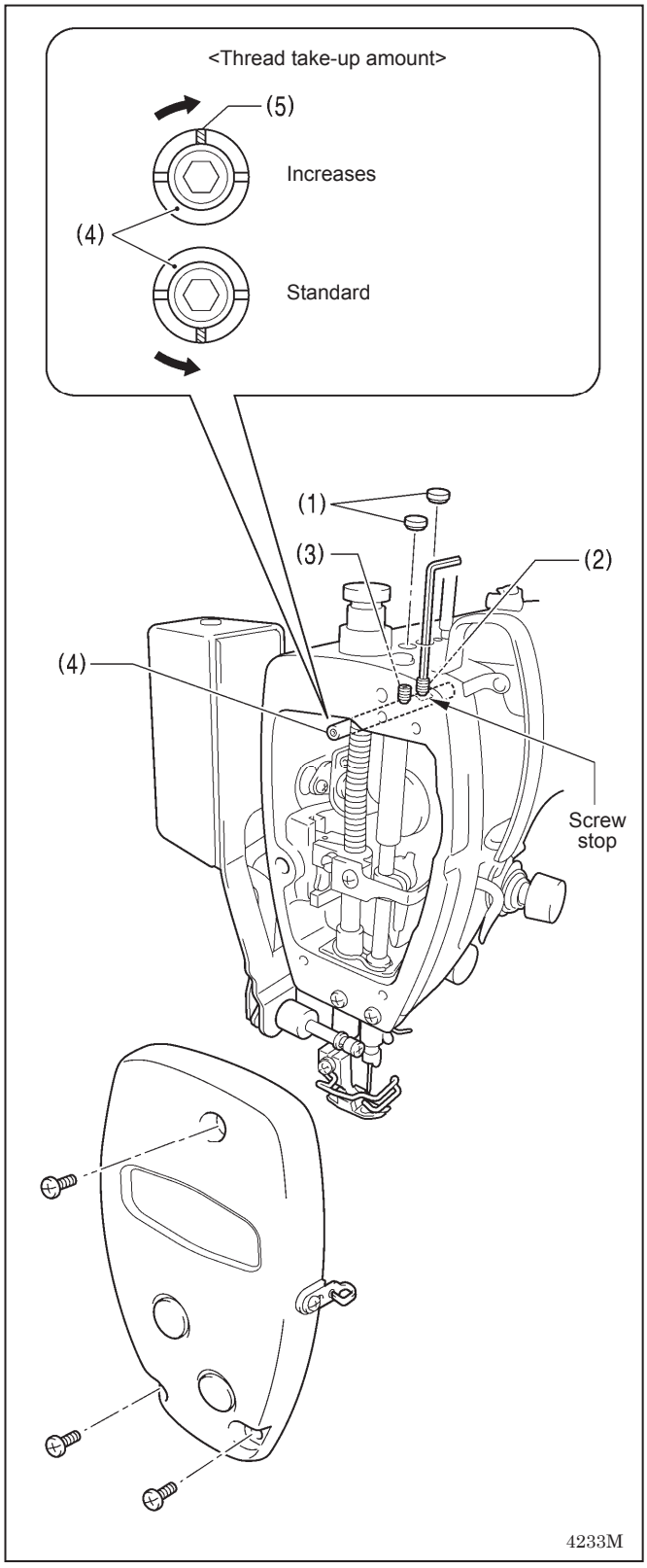

When sewing heavy materials, the thread tension can be adjusted more easily if the thread take-up amount is set to a larger amount.

1. Remove the face plate.
2. Remove the two rubber caps (1).
3. Use a hexagonal wrench 3 to loosen the set screws (2) and (3) by approximately two turns.
4. Adjust the thread take-up amount.

   <To increase the thread take-up amount>
   Turn the thread take-up support shaft (4) clockwise so that the groove (5) is facing straight upward.
   <To return the thread take-up amount to the standard setting>
   Turn the thread take-up support shaft (4) counterclockwise so that the groove (5) is facing straight downward.

5. With the thread take-up support shaft (4) pushed in as far as it will go, first tighten the set screw (2) until it touches the screw stop on the thread take-up support shaft (4).
6. After this, tighten the set screw (3).
7. Install the two rubber caps (1).
8. Install the face plate.

11. CLEANING

⚠ CAUTION

Turn off the power switch before carrying out cleaning.
The machine may operate if the treadle is depressed by mistake, which could result in injury.

Be sure to wear protective goggles and gloves when handling the lubricating oil and grease, so that they do not get into your eyes or onto your skin, otherwise inflammation can result.
Furthermore, do not drink the oil or eat the grease under any circumstances, as they can cause vomiting and diarrhea.
Keep the oil out of the reach of children.

Secure the table so that it will not move when tilting back the machine head. If the table moves, it may crush your feet or cause other injuries.

Use both hands to hold the machine head when tilting it back or returning it to its original position. If only one hand is used, the weight of the machine head may cause your hand to slip, and your hand may get caught.

11-1. Daily cleaning procedures

The followinig cleaning operations should be carried out each day in order to maintain the perfomance of this machine and to ensure a long service life.
Furthermore, if the sewing machine has not been used for a long period of time, carry out the following cleaning procedures before using it again.

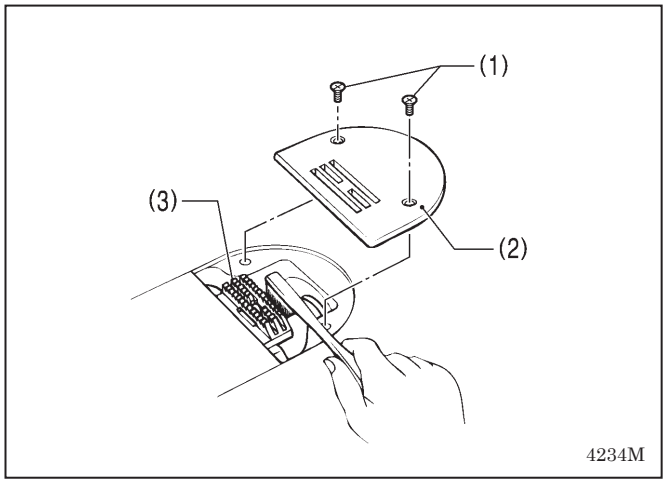

1. Cleaning

1. Raise the presser foot.
2. Remove the two screws (1), and then remove the needle plate (2).
3. Use a soft wire brush to clean any dust from the feed dog (3).
4. Install the needle plate (2) with the two screws (1).

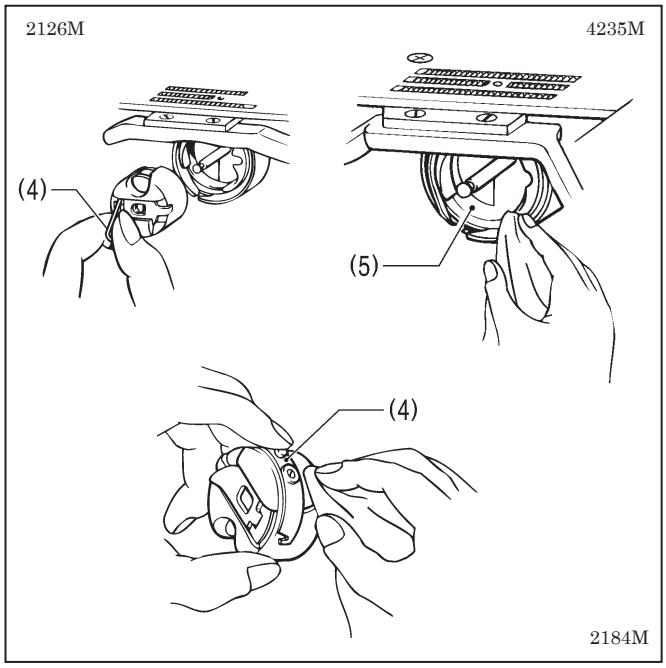

5. Tilt back the machine head.
6. Remove the bobbin case (4).
7. Wipe off any dust from the rotary hook (5) with a soft cloth, and check that there is no damage to the rotary hook (5).
8. Remove the bobbin from the bobbin case (4) and clean the bobbin case (4) with a cloth.
9. Insert the bobbin into the bobbin case (4), and then place the bobbin case (4) back into the machine.

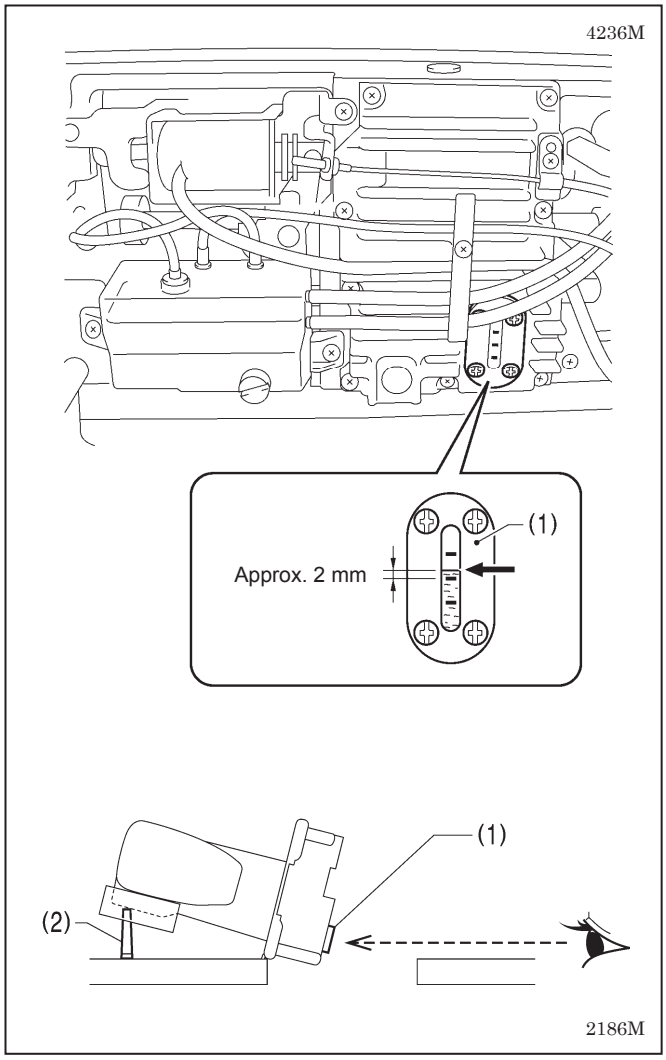

2. Lubrication

A. Gearbox oil quantity

NOTE:

- Check the quantity of oil in the gearbox immediately after tilting back the machine head.
  When the machine head is left for long periods in the tilted-back position, the amount of oil in the felt inside the gearbox drops and the oil level seen from the oil window (1) rises, so that it becomes impossible to measure the actual oil level accurately.
- The position of the oil level in the oil window (1) will vary depending on the angle of the machine head.
  Tilt back the machine head while the head rest (2) is installed in the correct position as shown in the table processing diagram on page 4 (refer to page 5).

<Checking the oil quantity>

The oil level should normally be approximately 2 mm above the center reference line in the oil window (1). (70 ml of lubricating oil is added to the gearbox at the time of shipment from the factory.)

1. Look at the oil window (1) from directly in front.
2. If the oil level is below the normal level, add more lubricating oil as described in the following procedure.

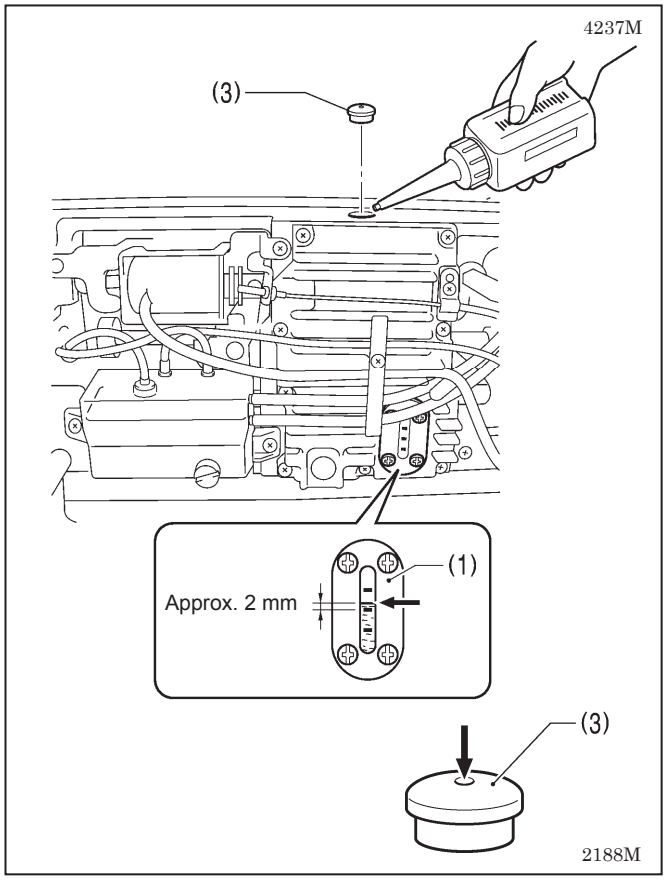

<Lubrication>

Use only the lubricating oil <Nippon Oil Corporation Sewing Lube 10N; VG10> specified by Brother.

* If this type of lubricating oil is difficult to obtain, the recommended oil to use is <Exxon Mobil Essotex SM10; VG10>.

1. Remove the rubber cap (3).
2. Add lubricating oil until the oil level is approximately 2 mm above the center reference line in the oil window (1).
   Do not pour all of the lubricating oil in at once at this time. Pour the lubricating oil 10 ml at a time while checking the oil window (1).
   NOTE:
   Do not pour too much lubricating oil into the specified location.
   If too much oil is added, oil leaks may result.
3. Insert the rubber cap (3) securely.
4. Return the machine head to its original position.

NOTE:

The rubber cap (3) has a hole in it for adjusting the air pressure.
When replacing the rubber cap (3) use only the replacement part specified by Brother.

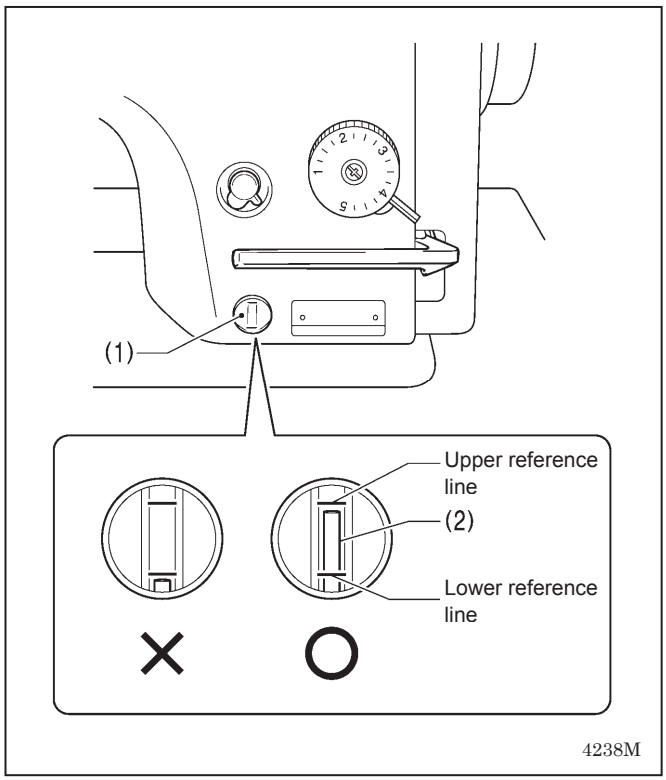

B. Oil tank oil quantity (-[]0[], []3[] specifications)

Check the oil gauge window (1), and add more oil if the oil gauge (2) is below the lower reference line.
(Refer to page 8.)

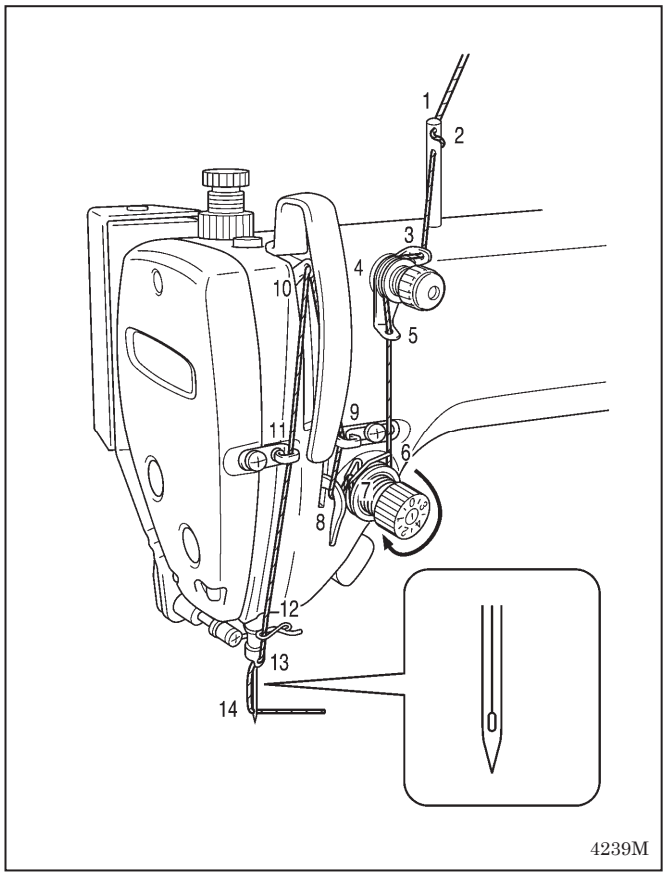

3. Checking

1. Replace the needle if it is bent or if the tip is broken.
2. Check that the upper threads have been threaded correctly. (Refer to page 17.)
3. Carry out a test sewing.

11-2. Applying grease (-[]3[], []5[] specifications*) [When “GrEASEUP” appears…When using the G50 operation panel]

If “GrEASEUP” flashes on the main display (1) and a buzzer sounds when the power switch is turned on, it means that grease needs to be applied. (The sewing machine will not operate at this time, even if the treadle is depressed.)
Apply grease as required, while referring to the following for details.

* If the sewing machine is of –[]0[] specifications, it is a minimum lubrication-type sewing machine, and so there is no need to add grease.

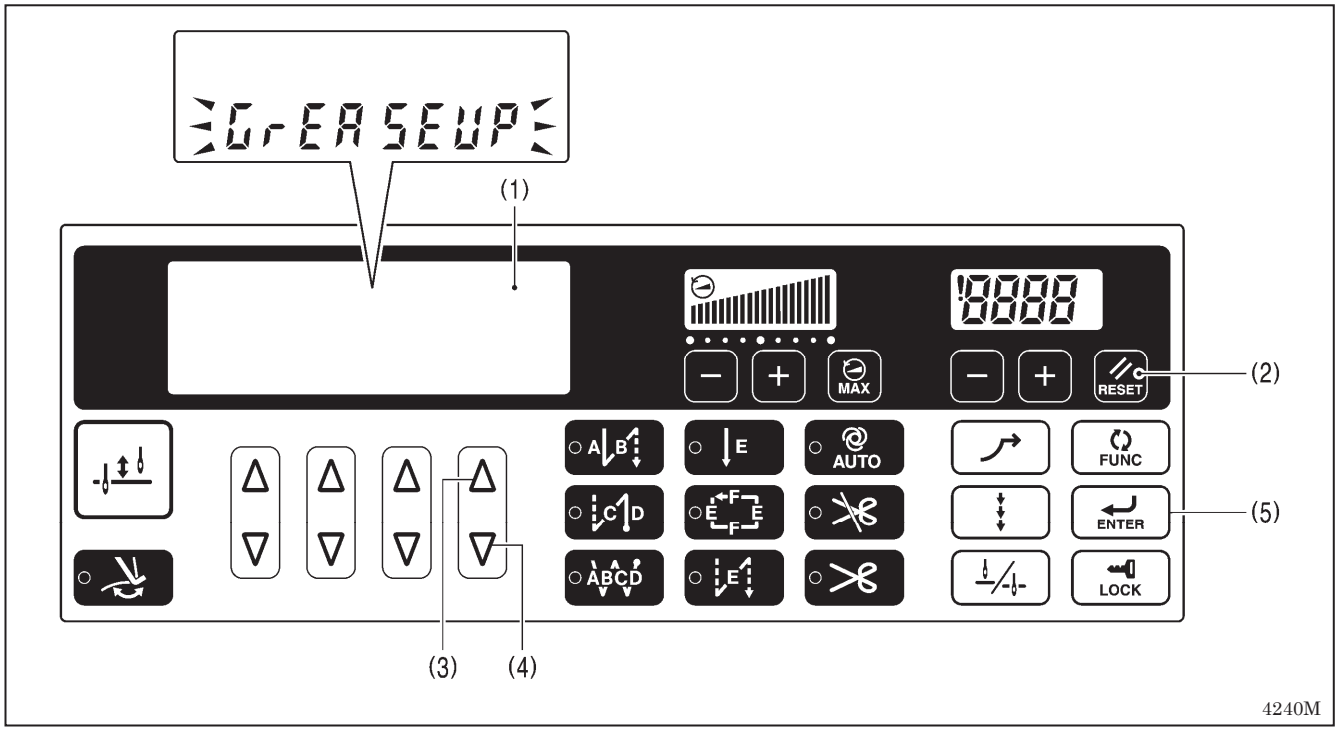

<To continue sewing without applying grease>

1. Press the RESET key (2).
2. The main display (1) will change to stitch number display mode, and sewing will be possible when the treadle is depressed.

NOTE

- If you do not apply grease when the “GrEASEUP” notification flashes, the notification will continue to flash each time the power is turned on until you reset the notification by carrying out the procedure on the following page.
- If you continue to use the sewing machine after the “GrEASEUP” notification appears without applying grease (or without carrying out the reset procedure), “ E100” will appear after a certain period of time and the sewing machine will be forcibly prevented from operating for safety reasons.
  If this happens, apply grease and carry out the reset procedure.

  * **If you continue to use the sewing machine after carrying out the reset procedure but without applying grease, problems with the sewing machine may result.**

<Applying grease>
Use Brother-specified “Grease unit (SA8837-001)”.

Using the tube

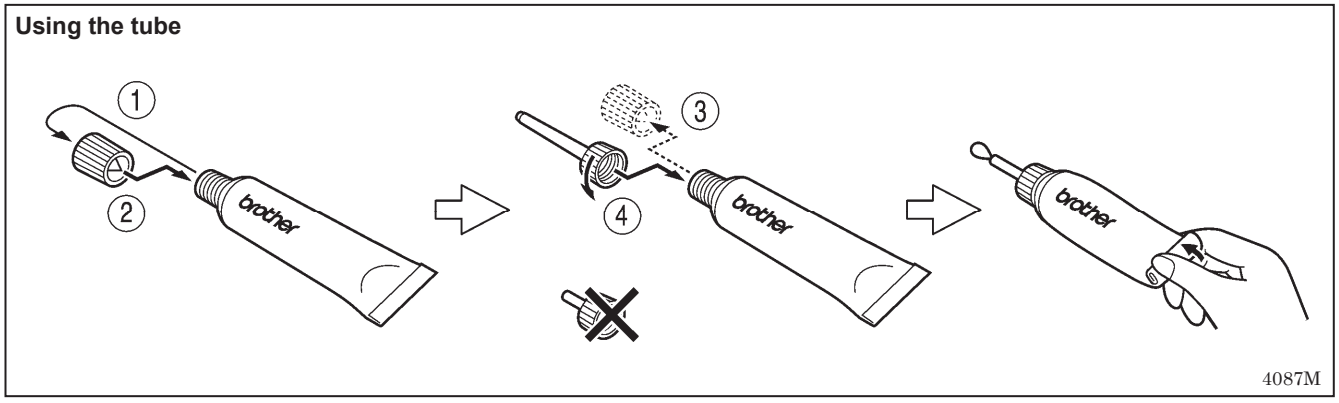

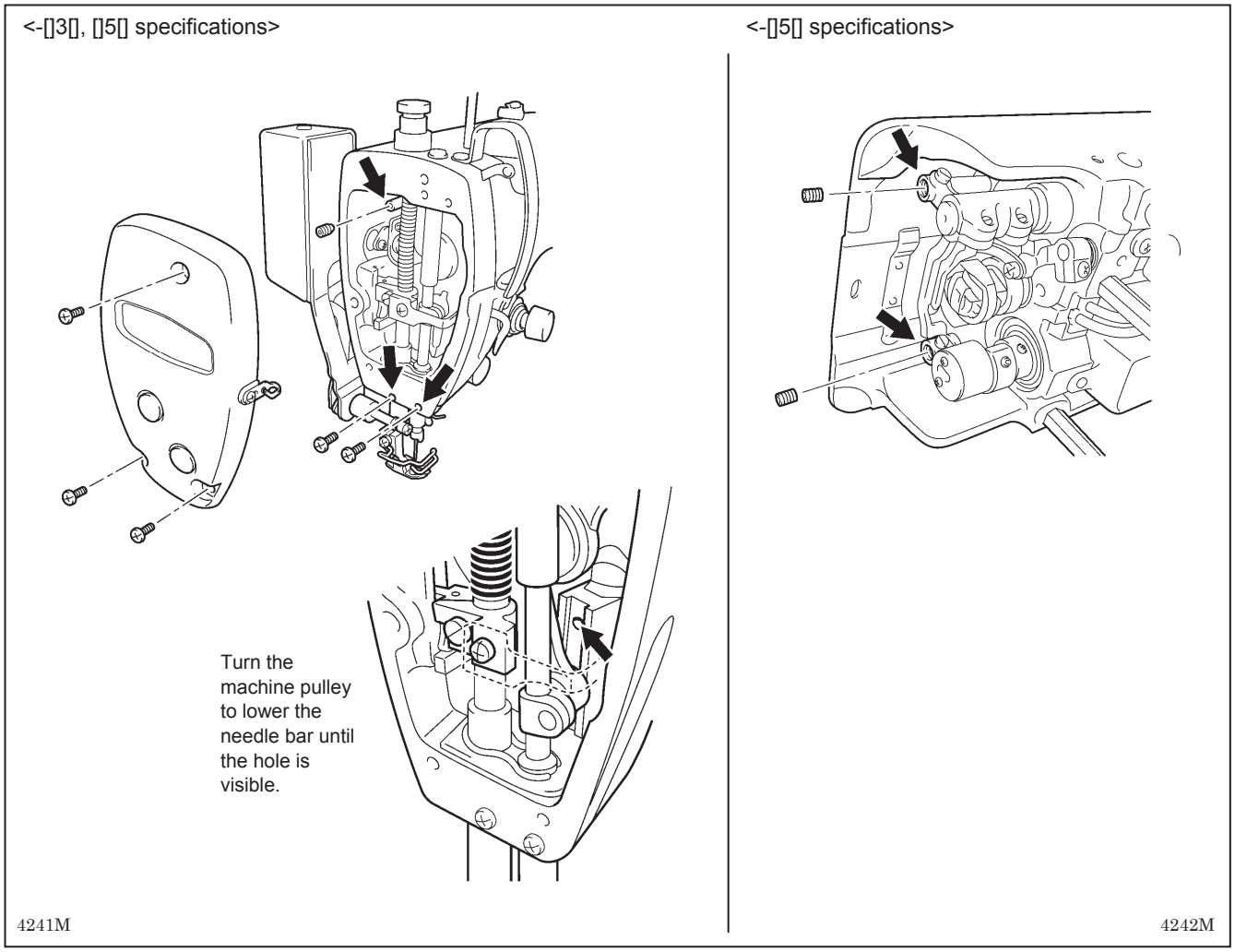

1. Turn the power switch to “OFF”.
2. Remove the screws and the set screws.
3. Apply grease to each of the holes until the grease overflows slightly.
4. Tighten the screws and the set screws in order to push the grease in.

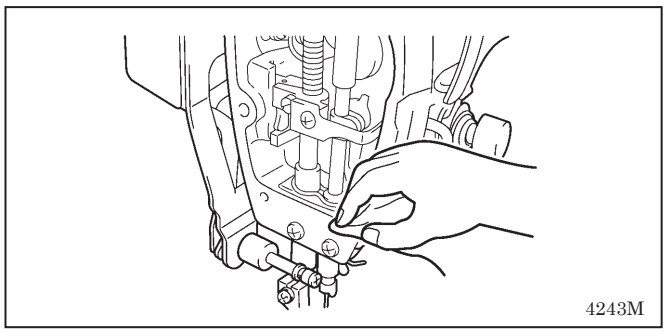

5. Turn the machine pulley by hand to move the needle bar up and down several times in order to disperse the grease.
6. Use a cloth to wipe away any excess grease from around the screws and set screws and from underneath needle bar bush D.
7. Carry out the reset procedure given below.

<Resetting the grease consumption amount>

After the grease has been applied, carry out the following procedure to reset the grease consumption amount.

1. While pressing the △ key (3) and the ▽ key (4) at the right end simultaneously, press the power ON switch.
2. “GuCt xxx” will appear in the main display (1). (“xxx” represents the amount of grease consumed. For example, “100” means that 100% of the grease has been consumed.)
3. Press the RESET key (2) for two seconds or more.
4. The main display (1) will change to “GuCt 0”.
5. Press the ENTER key (5). The main display (1) will change to stitch number display mode and treadle operation will be possible. (This completes the reset procedure.)

2138M 2139M

11-3. Applying grease (-[]3[], []5[] specifications*) [When “GrUP” appears ... When using the G10 operation panel]

If “GrUP” flashes in the display (1) and the buzzer sounds when the power ON switch is pressed, it means that it is time to add grease. (The sewing machine will not operate at this time, even if the treadle is depressed.)
Apply grease as required, while referring to the following for details.

* If the sewing machine is of –[]0[] specifications, it is a minimum lubrication-type sewing machine, and so there is no need to add grease.

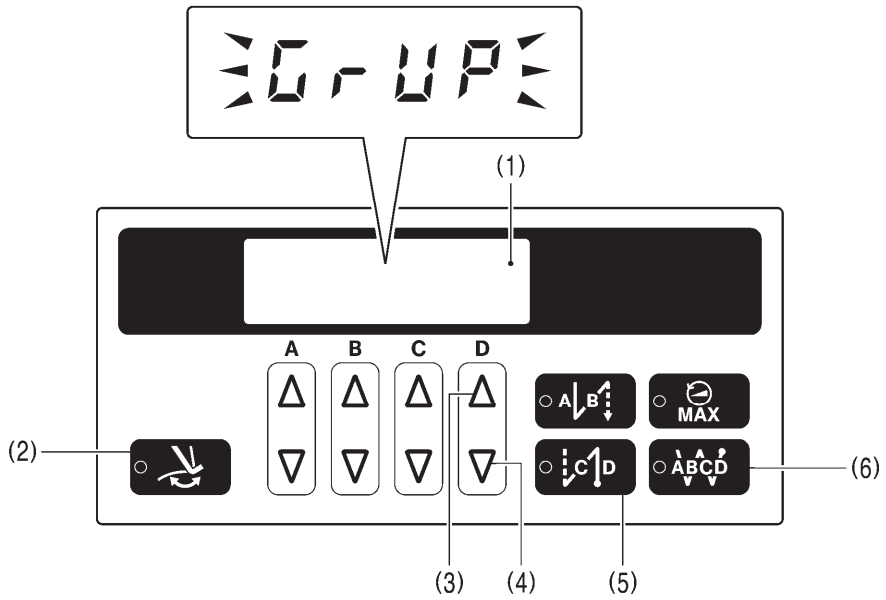

<To continue sewing without applying grease>

1. Press the thread wiper key (2).
2. The display (1) will change to stitch number display mode and sewing will be possible when the treadle is depressed.

NOTE

- If you do not apply grease when the “GrUP” notification flashes, the notification will continue to flash each time the power is turned on until you reset the notification by carrying out the procedure on the following page.
- If you continue to use the sewing machine after the “GrUP” notification appears without applying grease (or without carrying out the reset procedure), “E100” will appear after a certain period of time and the sewing machine will be forcibly prevented from operating for safety reasons.
  If this happens, apply grease and carry out the reset procedure.

  * **If you continue to use the sewing machine after carrying out the reset procedure but without applying grease, problems with the sewing machine may result.**

<Applying grease>
Use Brother-specified “Grease unit (SA8837-001)”.

Using the tube

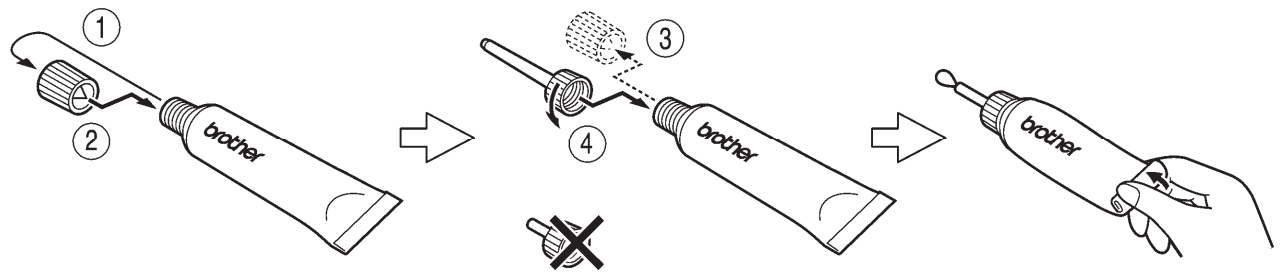

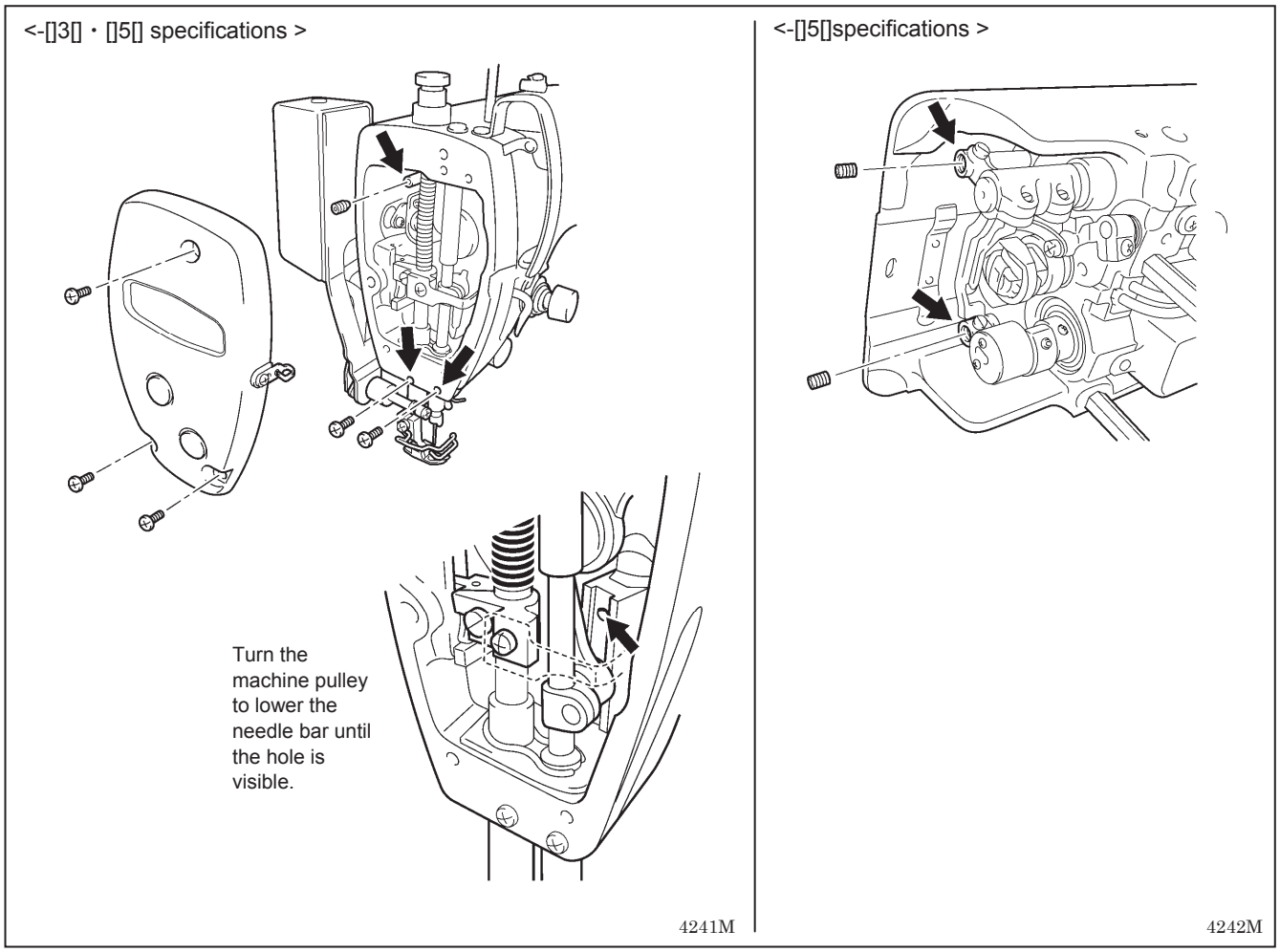

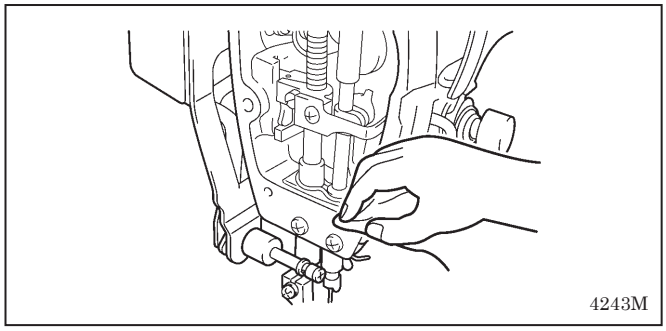

1. Turn the power switch to “OFF”.
2. Remove the screws and the set screws.
3. Apply grease to each of the holes until the grease overflows slightly.
4. Tighten the screws and the set screws in order to push the grease in.
5. Turn the machine pulley by hand to move the needle bar up and down several times in order to disperse the grease.
6. Use a cloth to wipe away any excess grease from around the screws and set screws and from underneath needle bar bush D.
7. Carry out the reset procedure given below.

<Resetting the grease consumption amount>

After the grease has been applied, carry out the following procedure to reset the grease consumption amount.

1. While pressing the △ key (3) and the ▽ key (4) at the right end simultaneously, press the power ON switch.
2. “GuCt” will appear in the display (1).
3. Press the end backtack key (5).
4. The indicator of the end backtack key (5) will illuminate and the display (1) will change to showing “xxx”. (“xxx” represents the amount of grease consumed.) For example, “100” means that 100% of the grease has been consumed.
5. Press the continuous backtack key (6) for 2 seconds or more.
6. The display (1) will change to “ 0”.
7. Press the thread wiper key (2). The display (1) will change to stitch number display mode and treadle operation will be possible. (This completes the reset procedure.)

2138M 2139M

12. ADJUSTING THE ROTARY HOOK LUBRICATION AMOUNT (-[]0[], []3[] specifications)

⚠ CAUTION

Be careful not to touch your fingers or the lubrication amount check sheet against moving parts such as the rotary hook or the feed mechanism when checking the amount of oil supplied to the rotary hook, otherwise injury may result.

Use the following procedure to check the amount of oil being supplied to the rotary hook when replacing the rotary hook or when changing the sewing speed.

NOTE:

If the sewing machine is sub-class -[]5[], it is a fully dry-type machine and so adjustment of the rotary hook lubrication amount is not necessary.

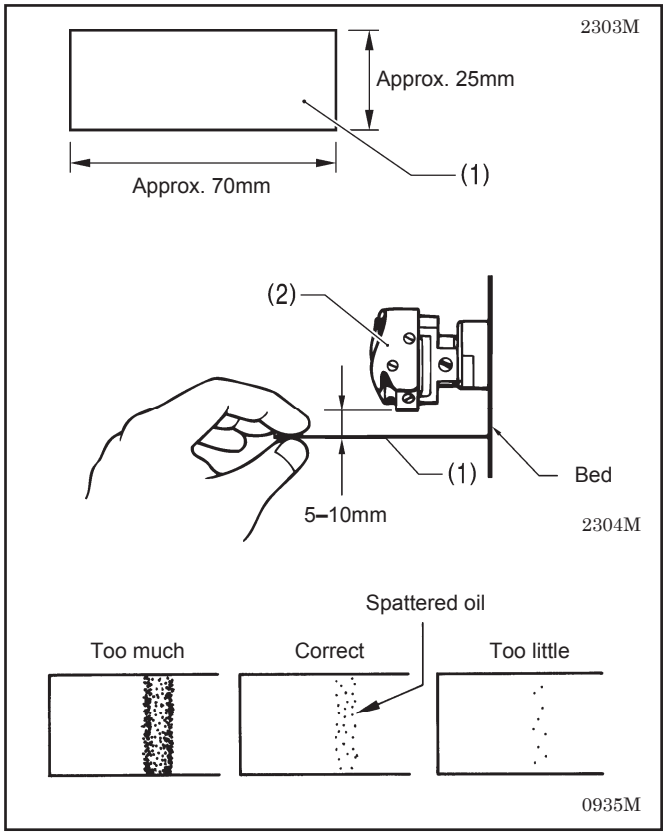

<Checking the lubrication amount>

1. Remove the thread from all points from the thread take-up to the needle.
2. Use the lifting lever to lift the presser foot.
3. Run the machine at the normal sewing speed for approximately 1 minute without sewing any material (following the same start/stop pattern as when actually sewing).
4. Place the lubrication amount check sheet (1) underneath the rotary hook (2) and hold it there. Then run the sewing machine at the normal sewing speed for 8 seconds. (Any type of paper can be used as the lubrication amount check sheet (1).)
5. Check the amount of oil which has spattered onto the sheet.

If adjustment is necessary, carry out the following operations in “Adjusting the lubrication amount”.

NOTE:

If the lubrication amount does not match the correct amount shown in the illustration at left (if the amount of spattered oil is too much or none at all), turn the adjusting screw (3) clockwise to fully tighten it, turn it back counterclockwise by 2 1/2 turns, and then carry out the following adjustment.

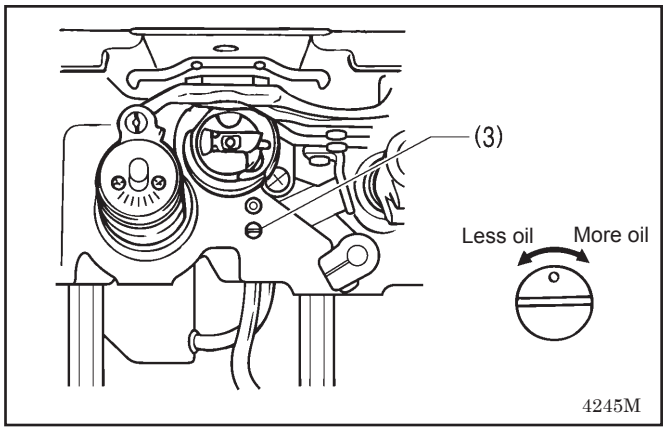

<Adjusting the lubrication amount>

1. Tilt back the machine head.
2. Turn the adjusting screw (3) to adjust the lubrication amount.
   - If the rotary hook adjusting screw (3) is turned clockwise, the lubrication amount becomes greater.
   - If the rotary hook adjusting screw (3) is turned counterclockwise, the lubrication amount becomes smaller.
3. Check the lubrication amount again according to the procedure given in “Checking the lubrication amount” above.
   * Turn the adjusting screw (3) and check the lubrication amount repeatedly until the lubrication amount is correct.
4. Check the lubrication amount again after the sewing machine has been used for approximately two hours.

13. STANDARD ADJUSTMENTS

⚠ CAUTION

- Maintenance and inspection of the sewing machine should only be carried out by a qualified technician.
- Ask your Brother dealer or a qualified electrician to carry out any maintenance and inspection of the electrical system.
- If any safety devices have been removed, be absolutely sure to re-install them to their original positions and check that they operate correctly before using the machine.
- Secure the table so that it will not move when tilting back the machine head. If the table moves, it may crush your feet or cause other injuries.
- Use both hands to hold the machine head when tilting it back or returning it to its original position. If only one hand is used, the weight of the machine head may cause your hand to slip, and your hand may get caught.
- Turn off the power switch and disconnect the power cord from the wall outlet at the following times, otherwise the machine may operate if the treadle is depressed by mistake, which could result in injury.
  - When carrying out inspection, adjustment and maintenance
  - When replacing consumable parts such as the rotary hook and knife
- If the power switch needs to be left on when carrying out some adjustment, be extremely careful to observe all safety precautions.

13-1. Adjusting the actuator switch position

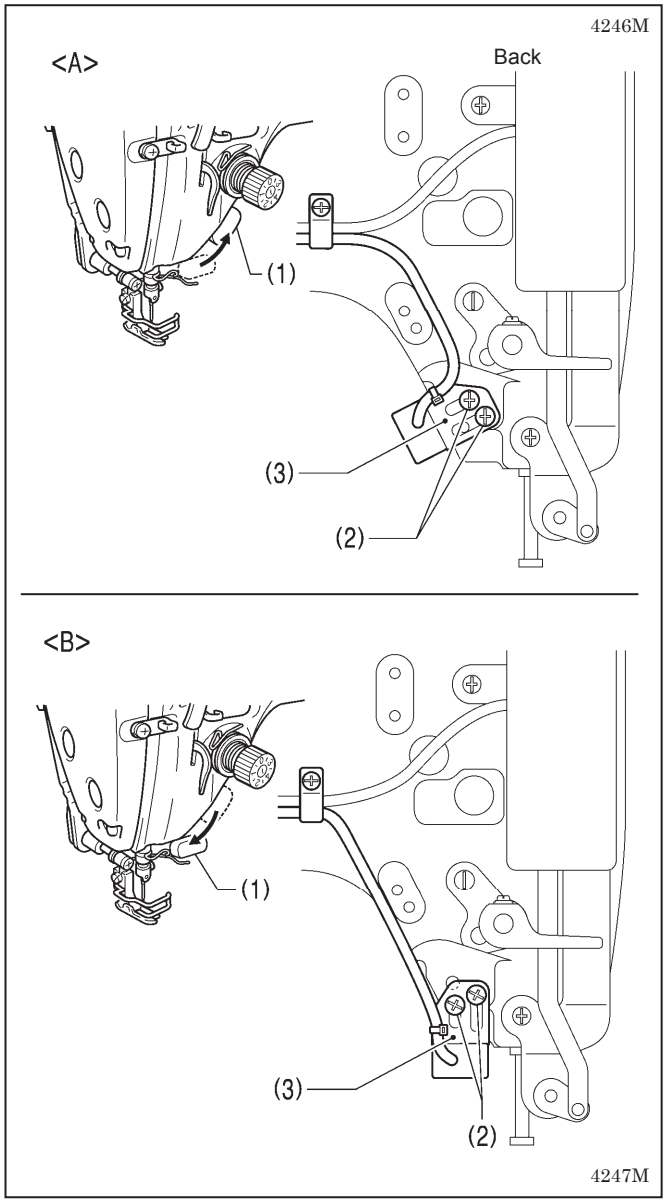

The installation position for the actuator switch (1) can be adjusted to <A> or <B>.
Adjust so that it is in a position where it is easy to operate.

1. Remove the two screws (2).
2. Move the switch setting base (3) to move the actuator switch (1) to the preferred position <A> or <B>.
3. Tighten the two screws (2).

< Actuator switch rotation function >

Additionally, the actuator switch (1) can be rotated 90 degrees as shown in the illustration. Select the position that is easier to use.

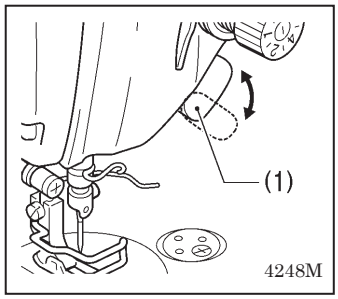

13-2. Adjusting the safety switch position

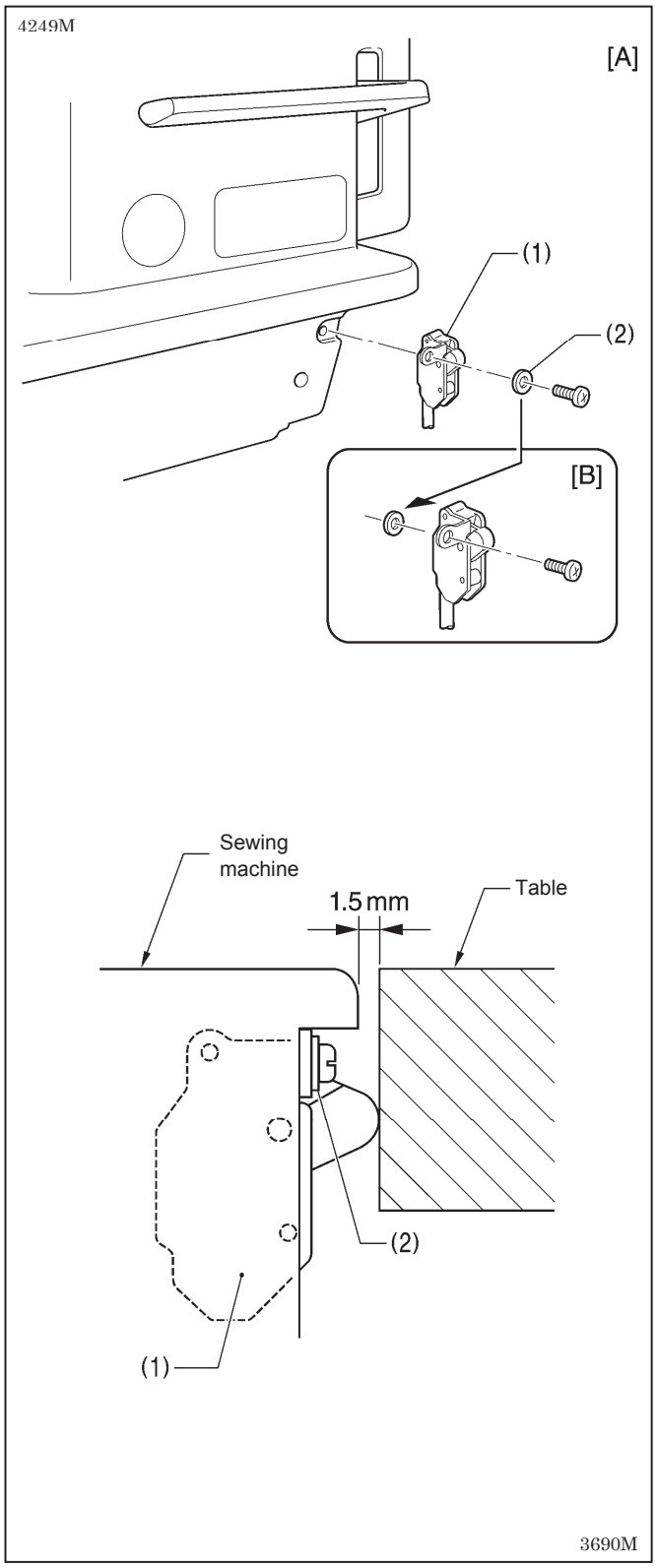

The safety switch (1) is normally installed as shown in figure [A].
However, if the processing method used for the table leaves too much space between the machine head and the table hole, it may adversely affect the operation of the safety switch (1).

<Adjustment method>

The standard amount of clearance between the machine head and the table hole is 1.5 mm.
If the clearance is 3.5 mm or more, install the safety switch (1) so that the washer (2) is on the machine head side as shown in Figure [B].

* If the position cannot be satisfactorily adjusted in this way, add more washers of the same thickness.

<Safety switch operation>

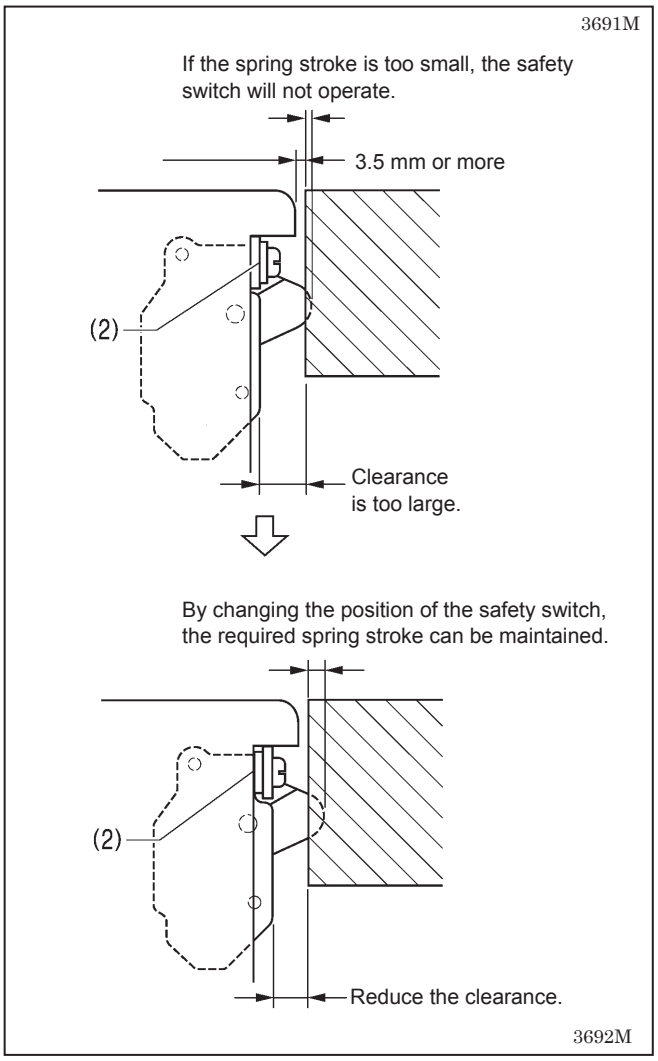

13-3. Adjusting the thread take-up spring

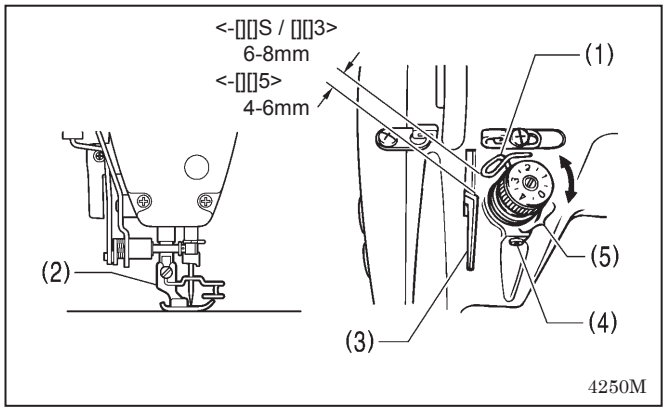

<Thread take-up spring position>

The standard position of the thread take-up spring (1) is 6-8 mm [4-6 mm for -[][]5 specifications] above the surface of the thread guide (3) when the presser foot (2) is lowered.

1. Lower the presser foot (2).
2. Loosen the set screw (4).
3. Turn the thread tension bracket (5) to adjust the spring position.
4. Securely tighten the set screw (4).

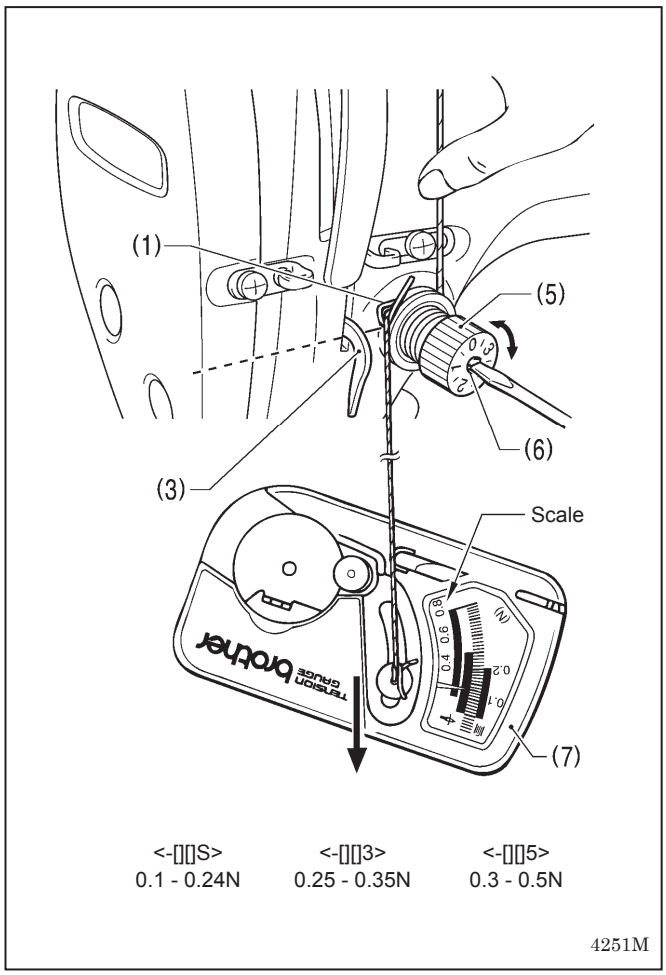

<Thread take-up spring tension>

The standard tension of the thread take-up spring (1) varies in accordance with the machine specifications as shown in the table.

-[][]S specifications	0.1 - 0.24N
-[][]3 specifications	0.25 - 0.35N
-[][]5 specifications	0.30 - 0.5N

1. Push the needle thread with your finger until it is slightly higher than the thread tension bracket (5) and so that the upper thread is not pulled out.
2. Pull the upper thread down until the thread take-up spring (1) is at the same height as the base of the thread guide (3), and then measure the tension of the thread take-up spring (1).
3. Insert a screwdriver into the slot of the tension stud (6), and turn the screwdriver to adjust the tension of the thread take-up spring (1).

NOTE: If using the tension gauge (7) (sold separately) to measure the tension, take the reading from the scale on the side of the red line.

13-4. Adjusting arm thread guide R

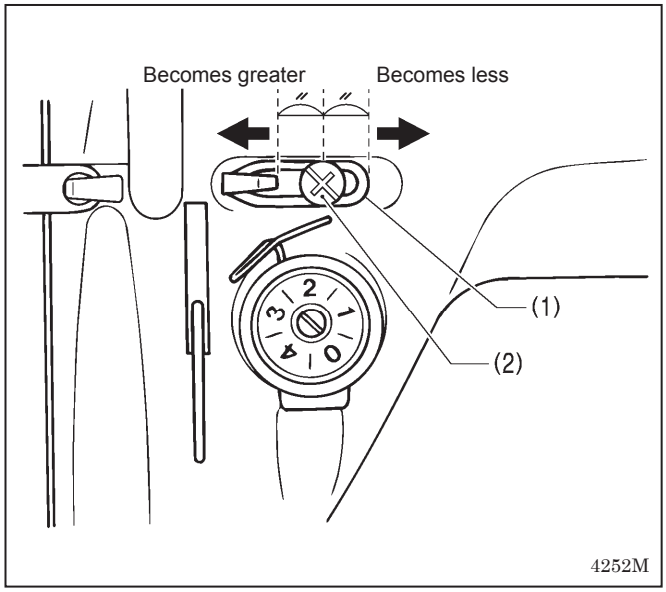

The standard position of arm thread guide R (1) is the position where the screw (2) is in the center of the adjustable range for arm thread guide R (1).

* To adjust the position, loosen the screw (2) and then move arm thread guide R (1).

- When sewing thick material, move arm thread guide R (1) to the left. (The thread take-up amount will become greater.)
- When sewing thin material, move arm thread guide R (1) to the right. (The thread take-up amount will become less.)

13-5. Adjusting the presser foot height

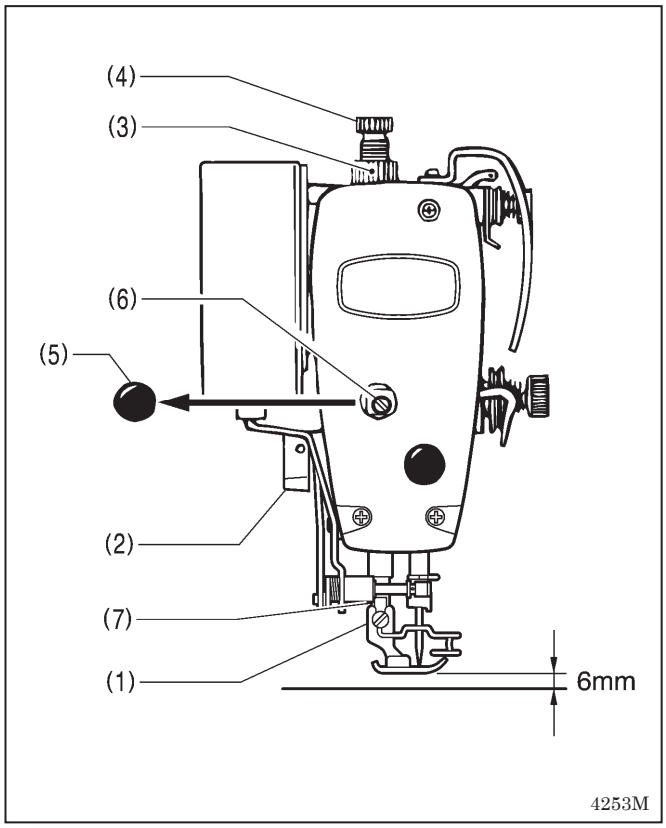

The standard height of the presser foot (1) is 6 mm when the presser foot (1) is raised by means of the lifting lever (2).

1. Loosen the nut (3) of the adjustment screw (4), and then turn the adjustment screw (4) so that there is no pressure applied to the presser foot.
2. Raise the lifting lever (2). The presser foot (1) will also rise.
3. Remove the oil cap (5).
4. Loosen the bolt (6) and then move the presser bar (7) up or down until the presser foot (1) is at the standard height of 6 mm.
5. Tighten the bolt (6).
6. Replace the oil cap (5).
7. Adjust the presser foot pressure using the adjustment screw (4), and then tighten the nut (3).

13-6. Adjusting of the feed dog height

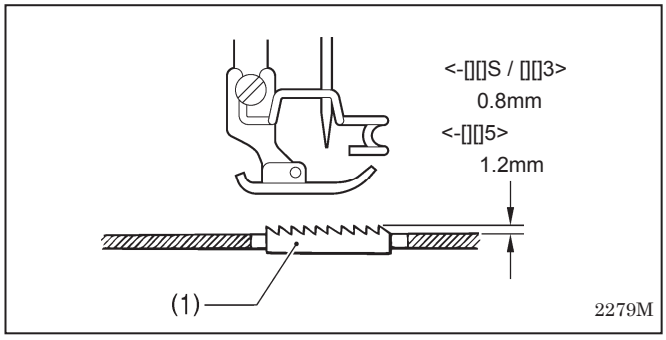

The standard height of the feed dog (1) when it is at its maximum height above the top of the needle plate is 0.8 mm for -[][]S / [][]3 specifications, and 1.2 mm for -[][]5 specifications.

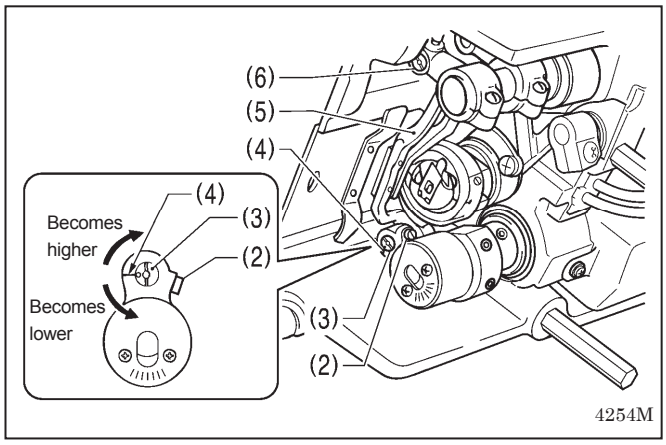

1. Turn the pulley until the feed dog (1) rises to the highest position.
2. Tilt back the machine head.
3. Loosen the screw (2).
4. Turn the feed lifting rock bracket stud (3) within a range of 90° from the reference line (4) to adjust the vertical height of the feed bar (5). (Fig. [A])
5. Tighten the screw (2).

* If you are worried about the angle of the feed dog (1), turn the shaft (6) while carrying out the above adjustment. (Fig. [B])
(Refer to “13-7. Adjusting the feed dog angle” on the next page for details of this operation.)

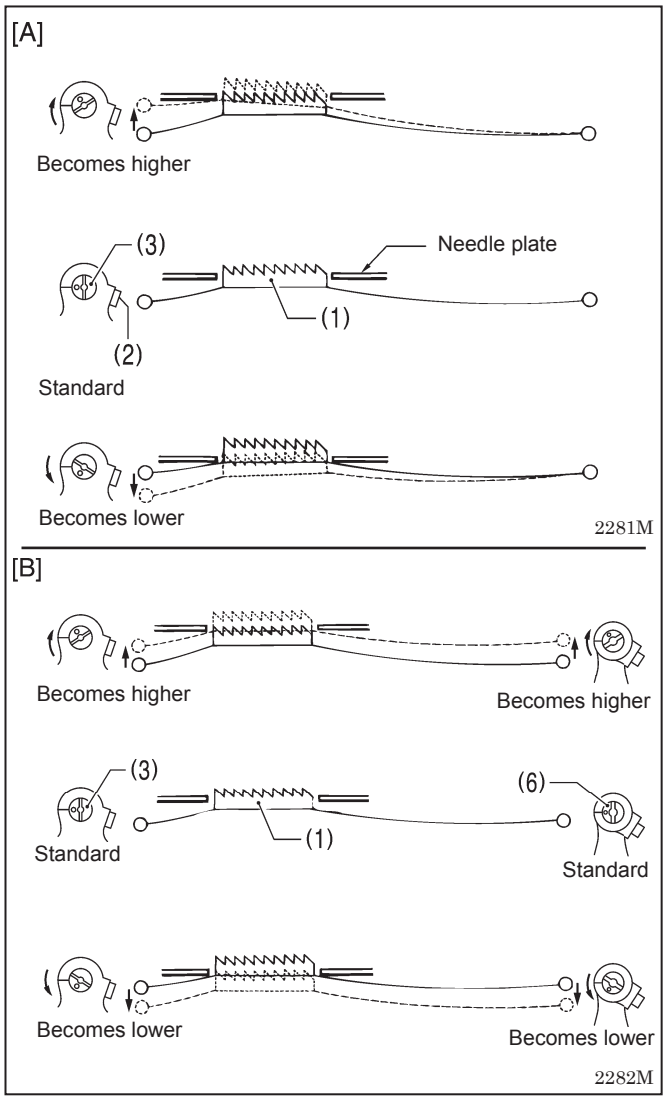

13-7. Adjusting the feed dog angle

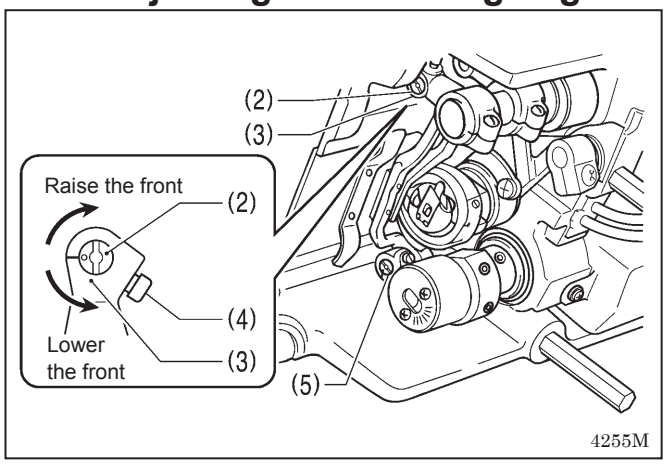

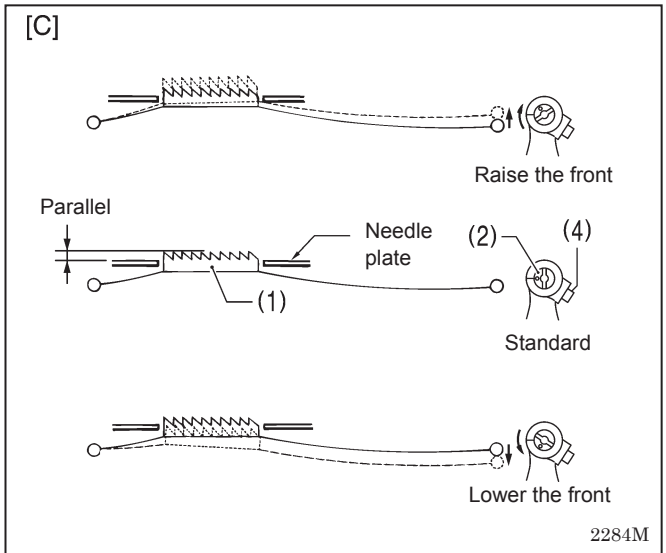

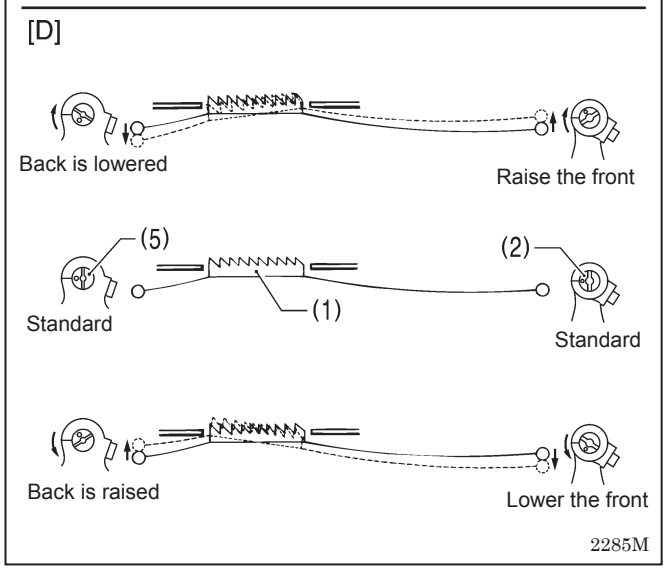

The standard angle for the feed dog (1) when it is at its highest position above the needle plate is when the "○" mark (or V groove) on the shaft (2) is aligned with the feed rocker bracket arm (3) and the feed dog (1) is parallel to the needle plate.

1. Turn the machine pulley to move the feed dog (1) to its highest position above the needle plate.
2. Tilt back the machine head.
3. Loosen the two set screws (4).
4. Turn the shaft (2) in the direction of the arrow within a range of 90° with respect to the standard position. (Fig. [C])
   - In order to prevent puckering, lower the front of the feed dog (1).
   - In order to prevent the material from slipping, raise the front of the feed dog (1).
5. Securely tighten the set screws (4).

* If you would like to tilt the feed dog (1) further, turn the feed lifting rock bracket stud (5) while carrying out the above adjustment. (Fig. [D])
(Refer to "13-6. Adjusting the feed dog height" on the previous page for details of this operation.)

* The height of the feed dog (1) will change after the angle has been adjusted, so it will be necessary to re-adjust the height of the feed dog (1).

13-8. Adjusting the needle bar height

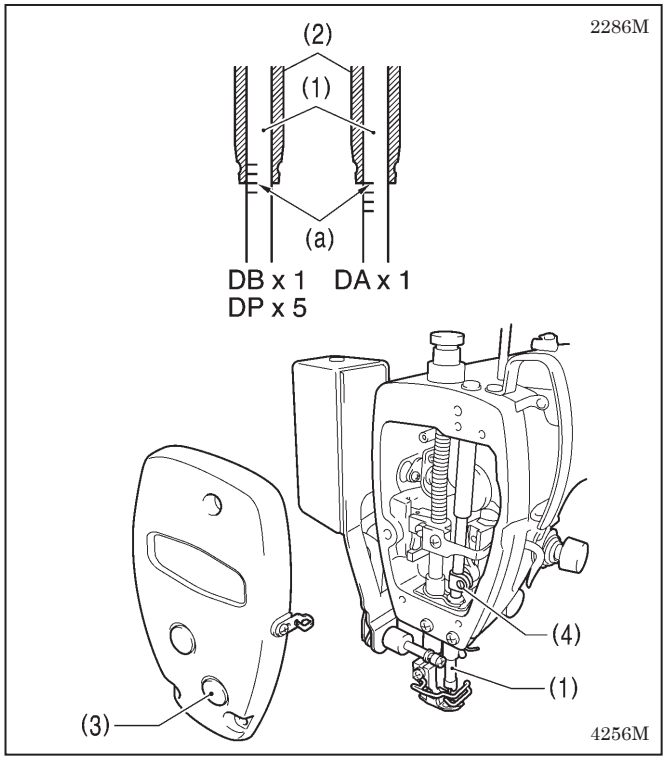

Reference line (a), which is the second line from the bottom of the needle bar (1)(fourth line from the bottom when using a DA x 1 needle) should be aligned with the lower edge of the needle bar bush D (2) as shown in the illustration when the needle bar (1) is at its lowest position.

1. Turn the machine pulley to set the needle bar (1) to its lowest position.
2. Remove the oil cap (3).
3. Loosen the screw (4) and then move the needle bar (1) up or down to adjust its position.
4. Securely tighten the screw (4).
5. Replace the oil cap (3).

13-9. Adjusting the needle and feed mechanism timing

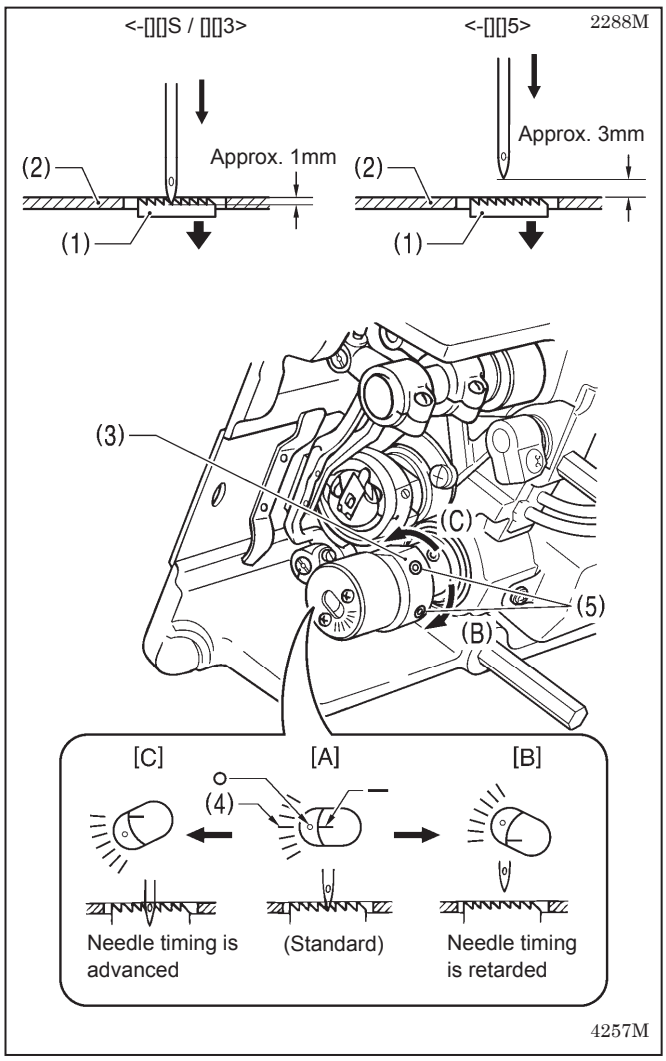

The standard position for point of the needle is as described below when the feed dog (1) is lowered from its highest position until it is aligned with the top of the needle plate (2). (At this time, the "-" mark on the lower shaft will be aligned with the center of the scale (4) ("O" mark) on the vertical cam (3).)

<-[][]S / -[][]3>

The top of the feed dog (1) and the top of the needle plate (2) should be aligned, and the point of the needle should be approximately 1 mm below the needle plate (2).

<-[][]5>

The top of the feed dog (1) and the top of the needle plate (2) should be aligned, and there should be a clearance of approximately 3 mm between the point of the needle and the needle plate (2).

1. Tilt back the machine head.
2. Loosen the two set screws (5), and then turn the vertical cam (3) sligtly to adjust the timing. (Use the "-" mark on the lower shaft and the alignment position on the scale (4) of the vertical cam (3) as a guide.)
   - To set to the standard position, align the "-" mark on the lower shaft with the center of the scale (4) ("O" mark) on the vertical cam (3). ([A] in the illustration)
   - To prevent material slippage from occurring, retard the needle timing. (Turn the vertical cam (3) in the direction of (B). Refer to [B] in the illustration.)
   - To improve thread tightening, advance the needle timing. (Turn the vertical cam (3) in the direction of (C). Refer to [C] in the illustration.)

   NOTE: Do not turn the vertical cam (3) too far in the direction of (C), otherwise it could cause the needle to break.
3. After adjustment is completed, securely tighten the two screws (5).

13-10. Adjusting the needle and rotary hook timing

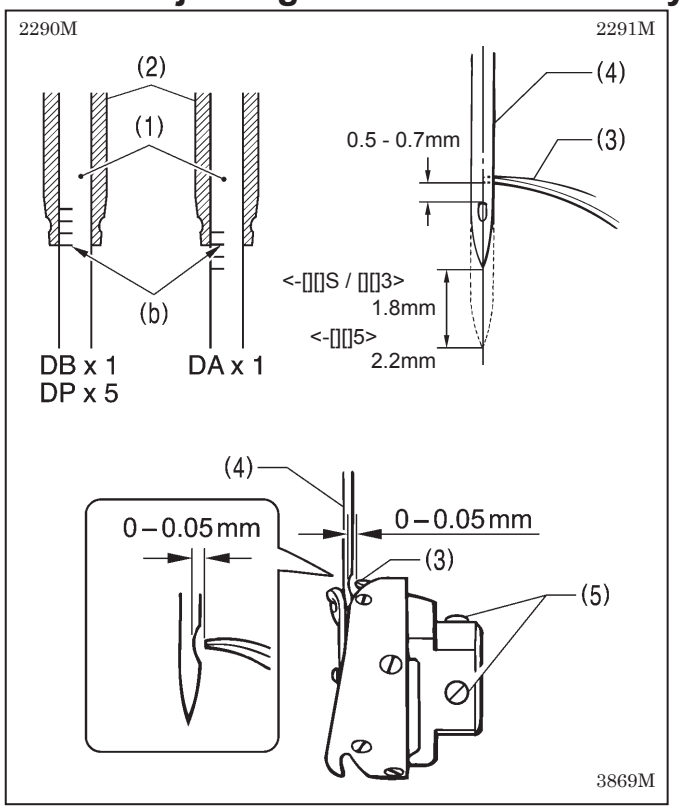

The tip of the rotary hook (3) should be aligned with the center of the needle (4) when the needle bar (1) moves up from its lowest position to the position where reference line (b), which is the line at the bottom of the needle bar (1)(third line from the bottom when using a DA x 1 needle), is aligned with the lower edge of the needle bar bush D (2) as shown in the illustration.

1. Turn the machine pulley to raise the needle bar (1) from its lowest position until reference line (b) is aligned with the lower edge of the needle bar bush D (2) as shown in the illustration.
   (The needle should rise by 1.8 mm [2.2 mm for -[][]5 specifications] and the distance from the needle hole to the tip of the rotary hook should be 0.5 - 0.7 mm.)
2. Loosen the set screws (5), and then align the tip of the rotary hook (3) with the center of the needle (4).
   The distance between the tip of the rotary hook (3) and the needle (4) should be approximately 0 - 0.05 mm.
3. Securely tighten the set screws (5).

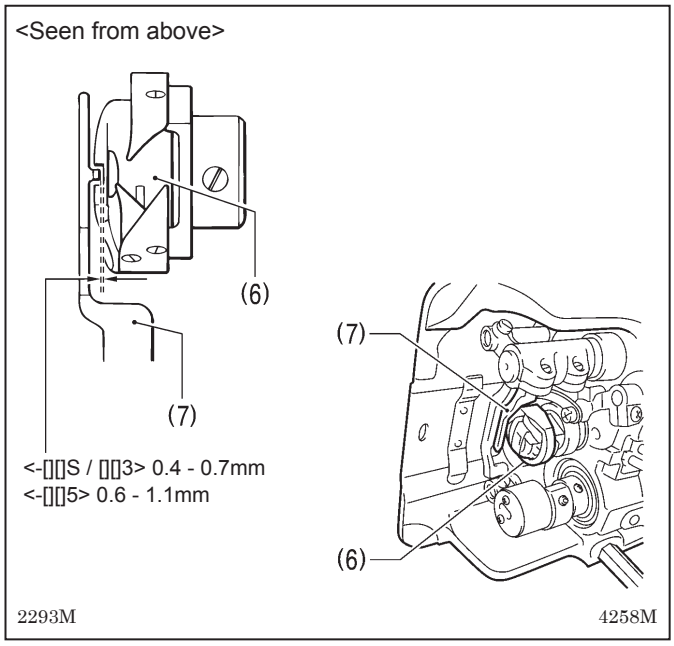

<Checking the clearance between the rotary hook and bobbin case holder position bracket>

Check that the clearance between the rotary hook (6) and the bobbin case holder position bracket (7) is enough to allow the thread being used to pass through smoothly.
The clearance should be 0.4 - 0.7 mm for -[][]S / [][]3 models, and 0.6 - 1.1 mm for -[][]5 models.

13-11. Adjusting the treadle

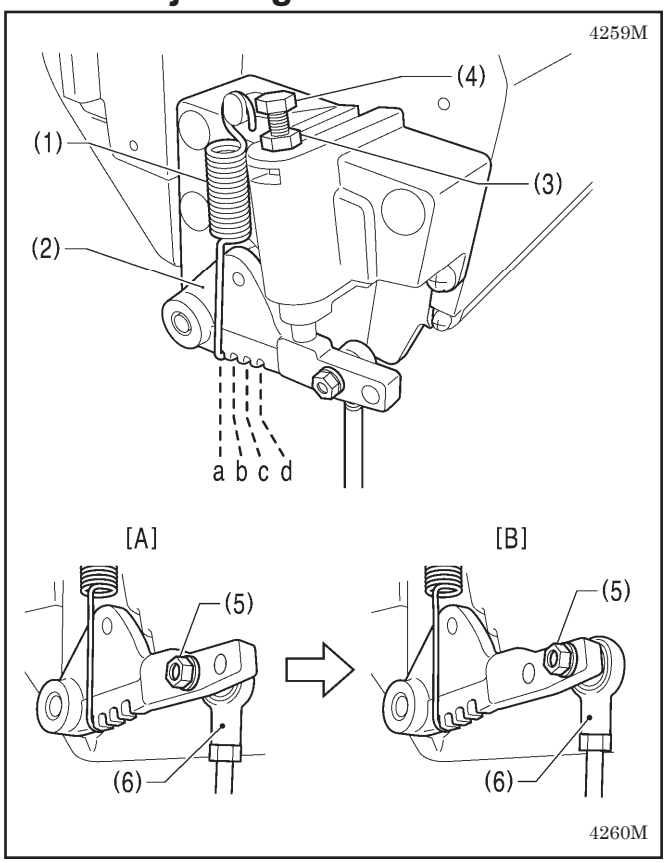

<Forward depression sensitivity adjustment>

If the machine starts running at low speed when your foot is simply resting on the treadle, or if the treadle pressure is felt to be too weak, adjust the position (a to c) at which the treadle spring (1) is hooked onto the treadle lever (2).

* a is the weakest position, and it becomes gradually stronger at b, c and d respectively.

<Backward depression sensitivity adjustment>

1. Loosen the nut (3) and turn the bolt (4).
   * When the bolt (4) is tightened, the treadle operation becomes heavier, and when it is loosened, the operation becomes lighter.
2. Tighten the nut (3).

<Adjusting the treadle stroke>

Remove the nut (5), and then move the connecting rod joint (6) from the position in figure A to the position in figure B. The treadle stroke will then be increased by approximately 27 %.
At this time, the treadle forward and backward depression sensitivity will change, so readjust if necessary.

13-12. Adjusting the presser foot floating amount (minute lifting amount)

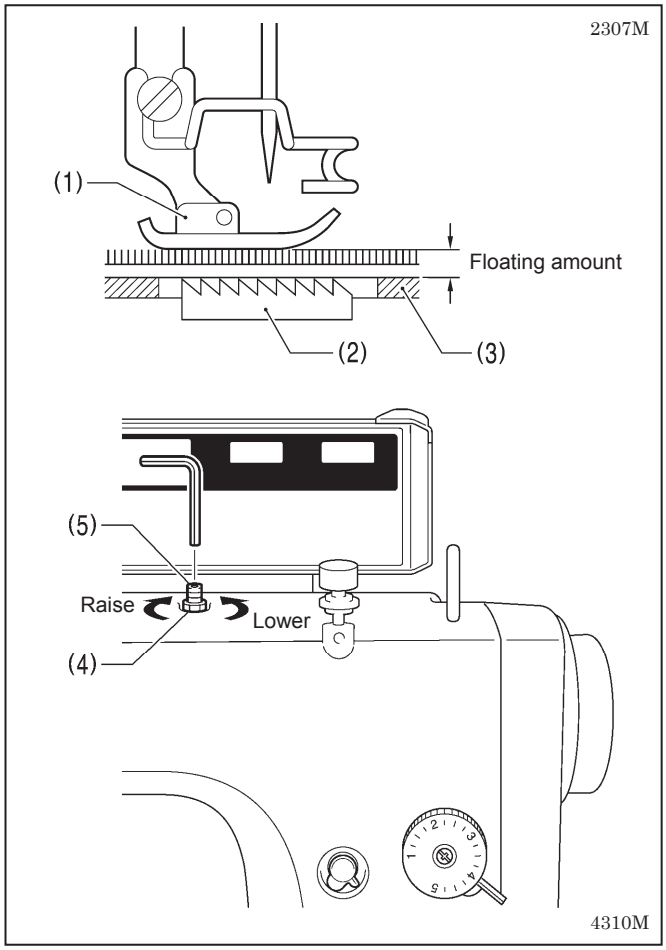

When sewing stretch materials and materials with long pile, you can make minute adjustments to the floating amount for the presser foot (1) in accordance with the material.

1. Turn the sewing machine pulley by hand to move the feed dog (2) below the needle plate (3).
2. Use the lifting lever to lower the presser foot (1).
3. Loosen the nut (4).
4. Use a hexagon wrench to turn the adjusting screw (5) to adjust the floating amount.
   - To raise the presser foot (1) ...
     Turn the adjusting screw (5) clockwise.
   - To lower the presser foot (1) ...
     Turn the adjusting screw (5) counterclockwise.
5. Tighten the nut (4).

* After making the adjustment, sew a piece of material to check the floating amount.

14. TROUBLESHOOTING

- Please check the following points before calling for repairs or service.
- If the following remedies do not fix the problem, turn off the power switch and consult a qualified technician or the place of purchase.

DANGER

Wait at least 5 minutes after turning off the power switch and disconnecting the power cord from the wall outlet before opening the cover of the control box. Touching areas where high voltages are present can result in severe injury.

CAUTION

Turn off the power switch and disconnect the power cord before carrying out troubleshooting.
The machine may operate if the treadle is depressed by mistake, which could result in injury.

14-1. Sewing

Items with a "*" in the "Page" column should only be checked by a qualified technician.

	Problem	Possible cause	Page
1	Upper thread is not tight. 0573M	• Is the upper thread tension too weak, or is the lower thread tension too strong? Adjust the upper thread tension or lower thread tension. • Is the needle and feed timing correct? Advance the needle timing.	 43 60*
2	Lower thread is not tight. 0574M	• Is the lower thread tension too weak, or is the upper thread tension too strong? Adjust the lower thread tension or upper thread tension.	 43
3	Loops appear in seam. 0977M	• Is the thread path not smooth enough? Use a file with a fine grain or sandpaper to polish smooth the thread path. • Is the bobbin not turning smoothly? Pull out the lower thread to check that there is no slackness in the thread tension, or replace the bobbin or bobbin case.	
4	Skipped stitches occur while sewing 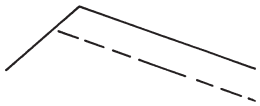 0470M	• Is the needle tip bent? Is the needle tip blunt? If the needle tip is bent or broken, replace the needle. • Is the needle properly installed? If it is incorrect, install the needle correctly. • Is the machine properly threaded? If it is incorrect, thread the thread correctly. • Is the presser foot pressure too weak? Adjust the presser foot pressure. • Is the needle too thin? Replace the needle with a needle that is one rank thicker. • Is the presser foot too high? Adjust the height of the presser foot. • Is the thread take-up spring too weak? Adjust the tension of the thread take-up spring. • Is the needle and rotary hook timing correct? Adjust the height of the needle bar. Adjust the clearance between the needle and the tip of the rotary hook.	 15 17 44 57* 56* 60* 61*

	Problem	Possible cause	Page
5	Skipped stitches at sewing start Thread unravelling at sewing start 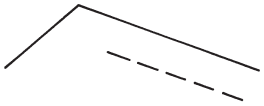 0749M	• Is the thread take-up spring tension too strong? Reduce the tension of the thread take-up spring. • Is the thread take-up spring operating range too large? Lower the position of the thread take-up spring. • Are the trailing lengths of the upper threads too short after thread trimming? Adjust the pretension. • Are the threads not being trimmed cleanly? Sharpen the fixed knives, or replace the fixed and movable knives if necessary. • Is the needle too thick? Try using a needle with a count that is one lower than the current needle. • Is the length of thread trailing out from the bobbin case after thread trimming too short? If the bobbin is spinning loosely, replace the anti-spin spring in the bobbin case. • Is the sewing speed too fast at the sewing start? Use the slow start feature. (G50 operation panel) Set so that slow start is enabled. (G10 operation panel) • Is the needle up stop position too high? Adjust the needle up stop position.	56* 56* 44 * 15 27* 35* 28, 39*
6	Uneven seam 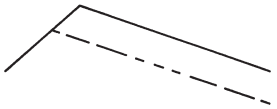 0473M	• Is the presser foot pressure too weak? Adjust the presser foot pressure. • Is the feed dog too low? Adjust the feed dog height. • Is the bobbin scratched? If the bobbin is damaged, smooth it with an oiled grindstone or replace it.	44 58*
7	Large degree of puckering (excess tension) 0978M	• Is the upper thread tension too strong? Make the upper thread tension as weak as possible. • Is the lower thread tension too strong? Make the lower thread tension as weak as possible. • Is the needle tip blunt? Replace the needle if it is blunt. • Is the needle too thick? Replace with as thin a needle as possible. • Are the thread take-up spring tensions too strong? Make the thread take-up spring tension as weak as possible. • Is the thread take-up spring operating range too large? Lower the position of the thread take-up spring to as low a position as possible. • Is the presser foot pressure too strong? Adjust the presser foot pressure. • Is the sewing speed too fast? Use the sewing speed control keys to gradually reduce the sewing speed. (G50 operation panel) Gradually reduce the maximum sewing speed (G10 operation panel) • Is the angle of the feed dog correct? Tilt the front of the feed dog down slightly.	43 43 56* 56* 44 20 38* 59*

	Problem	Possible cause	Page
8	Material slippage 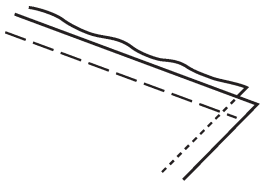 0750M	• Is the presser foot pressure too strong? Adjust the presser foot pressure.	44
9	Lower thread is tangled at the sewing start. Spinning of bobbin during thread trimming 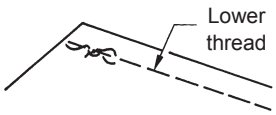 0751M	• Is the bobbin spinning direction correct when the lower thread is being pulled? Set the bobbin so that it turns in the opposite direction to the rotary hook. • Is there too much thread wound onto the bobbin? The bobbin winding amount should not be more than 80 %. 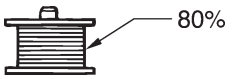 2124M • Is the anti-spin spring attached? Attach the anti-spin spring. • Is the bobbin turning smoothly? If the bobbin is not turning smoothly, replace the bobbin. • Is a bobbin other that the light-alloy bobbins specified by Brother being used? Use only bobbins which are specified by Brother.	16 16 15 15
10	Upper and lower threads are breaking. 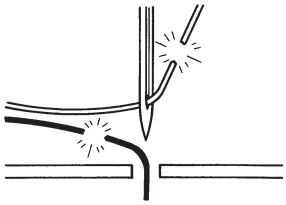 0471M	• Is the needle bent or is the needle tip broken? Replace the needle if it is bent or broken. • Is the needle properly installed? If it is incorrect, install the needle correctly. • Is the machine properly threaded? If it is incorrect, thread the thread correctly. • Is the rotary hook sufficiently lubricated? (-[]0[], []3[] specifications) If the oil gauge is down to the lower reference line in the oil gauge window, add more oil. • Is the upper or lower thread tension too weak or too strong? Adjust the upper thread or lower thread tension. • Is the upper thread may be loose because the thread take-up spring operating range is too small? Adjust the position of the thread take-up spring. • Is the rotary hook, feed dog or other part damaged? If they are damaged, smooth them with an oiled grindstone or replace the damaged parts. • Is the thread path damaged? If the thread path is damaged, smooth it with sandpaper or replace the damaged part.	15 17 8 43 56* * *
11	Incorrect thread trimming (Upper and lower threads are both not being trimmed)	• Is the fixed knife or movable knife damaged or worn? Replace the fixed knife or the movable knife.	*
12	Incorrect thread trimming (Upper thread or lower thread is not being trimmed)	• Is the needle properly installed? If it is incorrect, install the needle correctly. • Is the fixed knife or movable knife blunt? Replace the fixed knife or the movable knife.	15 *

	Problem	Possible cause	Page
13	Broken needles 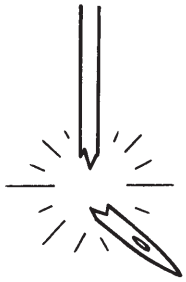 0469M	• Is the material being pushed or pulled with excessive force during sewing? • Is the needle properly installed? If it is incorrect, install the needle correctly. • Is the needle bent, is the needle tip broken, or is the needle hole blocked? Replace the needle. • Is the needle and rotary hook timing correct? Adjust the height of the needle bar. Adjust the clearance between the needle and the tip of the rotary hook. • Is the needle timing too advanced with respect to the feed dog? Retard the needle timing. Caution • It is extremely dangerous to leave any pieces of broken needle sticking in the material. If the needle breaks, search for all pieces until the whole of the needle is found again. • Furthermore, we recommend that through steps be taken to account for such needles to comply with product liability regulations.	15 60* 61* 60*
14	Oil gauge (1) is not visible in oil gauge window. 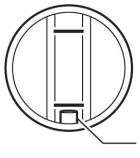 (1) 4262M	• Is the oil tank empty? (-[]0[], []3[] specifications) Fill the oil tank with oil.	8
15	Machine does not operate when power is turned on and treadle is pressed.	• Is the power supply connector disconnected from the control box? Insert the connector securely. 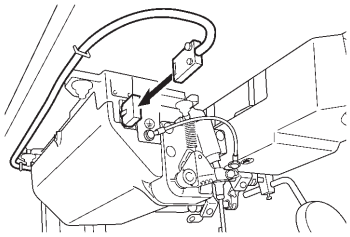 4263M	12, 13
16	Machine does not operate at high speed.	• Is the sewing speed setting or backtack speed setting incorrect? Use the sewing speed control keys to set the high speed. (G50 operation panel) Set the maximum sewing speed to a higher speed (G10 operation panel)	20 38*
17	Machine stops during sewing.	• Is the fixed stitch key turned on? Press the fixed stitch key so that the indicator turns off. (G50 operation panel) • Is the power supply voltage too low? Check the power supply. (If the power cord is too long or too many appliances are being run from a single outlet, this may cause voltage drops which will in turn cause the reset function to activate and stop the machine, even if the power supply itself is normal.)	23 *

	Problem	Possible cause	Page
18	Nothing appears on the operation panel display.	• Is the power supply connector disconnected from the control box? Insert the connector securely. 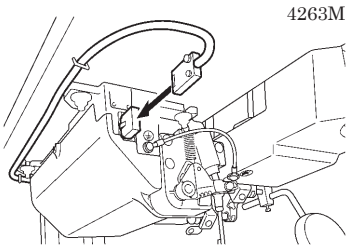 	12
		• Is the operation panel connector inside the control box disconnected? Insert the connector securely. 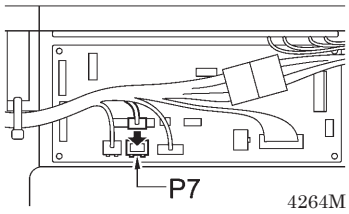 	10*
19	“GrEASEUP” or “GrUP” flashes in the panel display when the power switch is turned on.	• This display is to notify you that it is time to apply grease. Apply grease.	49, 51*

14-2. Error code displays

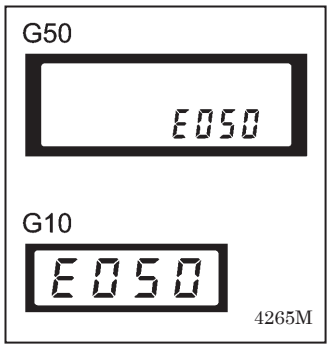

If an error code appears on the operation panel display

1. Make a note of the error code and then turn off the power.
2. After the operation panel display has turned off, eliminate the cause of the error and then turn the power back on.

- Items with a " * " in the "Page" column should only be checked by a qualified technician.
- For items with " ** " appearing in the "Page" column, ask the place of purchase for advice.

< Connector and DIP switch layout diagram >

Main P.C. board

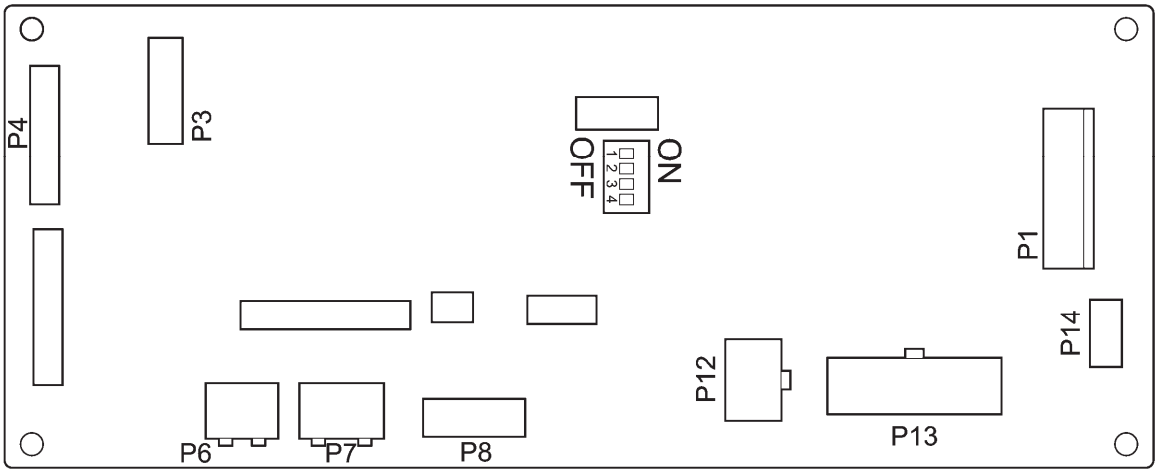

Error code	Possible cause	Page
E050	・ The machine head was detected as being tilted back when the treadle was depressed. Press the power OFF switch and then return the machine head to the upright position. (If tilting back the machine head to carry out any tasks, press the power OFF switch first.)	
E051	・ The machine head was detected as being tilted back during sewing. Turn the power off and then back on again.	
E055	・ Was the power ON switch pressed while the machine head was still tilted back? Press the power OFF switch and then return the machine head to the upright position. ・ Is the 14-pin machine connector inside the control box disconnected? Press the power OFF switch, and then check that the 14-pin machine connector is connected to connector P13 on the main P.C. board.	10*
E065	・ Was the power ON switch pressed while an invalid key was being pressed on the operation panel? Press the power OFF switch and check that no operation panel keys are being pressed. ・ There is a malfunction of the operation panel. Replace the operation panel.	**
E066	・ Was the actuator switch being pressed when the power ON switch was pressed? Press the power OFF switch and check that the actuator switch is not being pressed ・ There is a problem with the actuator switch. Replace the actuator switch.	54

Error code	Possible cause	Page
E090 Treadle connector is not connected.	・ Is the 4-pin treadle connector inside the control box disconnected? Press the power OFF switch, and then check that the 4-pin treadle connector is connected to connector P14 on the main P.C. board. If there is a broken wire in the cord of the treadle connector, replace the treadle unit.	* **
E091	・ The settings in “Setting method for standard depression stroke” may be incorrect. Redo the settings in “Setting method for standard depression stroke”. ・ Problem with treadle unit. Replace the treadle unit.	* **
E095	・ Was the power ON switch pressed while the treadle was still depressed? Return the treadle to the neutral position. When the treadle neutral position is detected, the error will be cleared and normal operation will then be possible. ・ Is the power supply voltage too low? Check the power supply voltage.	*
E100	・ This appears on the display when the sewing machine has continued to be used for a certain period after the “GrEASEUP” or “GrUP” notification appears without the grease being applied (without the reset procedure being carried out). Press the power OFF switch, apply grease, and then carry out the reset procedure.	49, 51*
E111	・ The sewing machine could not stop correctly at the needle up stop position after thread trimming. Remove any thread scraps that may be blocking the motor. Press the power OFF switch and then turn the machine pulley by hand and check that it turns easily. Check that there are no problems with the thread trimming mechanism.	* * **
E130	The sewing machine or motor do not operate when the treadle is depressed. ・ Is the 4-pin motor connector inside the control box disconnected? Press the power OFF switch and check the connection of the 4-pin motor connector. ・ Has the sewing machine locked up? Press the power OFF switch and then turn the machine pulley by hand and check that it turns easily. ・ Problem with control box. Replace the control box.	10* * **
E131 Problem with motor encoder signal.	・ Is the 10-pin resolver connector inside the control box disconnected? Press the power OFF switch, and then check that the 10-pin resolver connector is connected to connector P6 on the main P.C. board. ・ Problem with motor or main P.C. board. Replace the motor or the control box.	10* **
E132 Problem with motor operation.	・ Problem with motor. Replace the motor. ・ Problem with drive P.C. board. Replace the control box.	** **
E134 Motor open phase detected	・ Is the 4-pin motor connector inside the control box disconnected? Press the power OFF switch and check the connection of the 4-pin motor connector. ・ Problem with drive P.C. board or motor. Replace the control box or the motor.	* **

Error code	Possible cause	Page
E150 Motor is overheating.	・ This is displayed when the motor becomes abnormally hot and the temperature protection has activated. After the temperature has dropped, press the power ON switch and operate the sewing machine as normal.	
E151 Problem with motor overheating sensor.	・ Is the connector inside the motor disconnected? Press the power OFF switch, and then check that the connector is securely inserted. ・ Malfunction of motor overheating sensor Replace the motor. 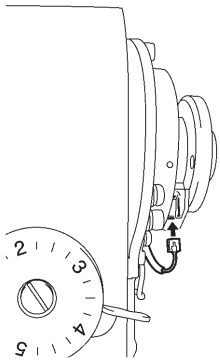 4267M	* **
E190 Motor timeout	・ This appears on the display when the sewing machine has been operating continuously for 3 minutes or more. Turn the power switch off and then back on again, and then operate the sewing machine normally.	
E191 Thread trimming solenoid timeout	・ This is displayed if the sewing machine motor locks during thread trimming. Remove any thread scraps that may be blocking the motor. Check that there are no problems with the thread trimming mechanism.	* **
E410 Error communicating with operation panel	・ Is the 12-pin operation panel connector inside the control box disconnected? Press the power OFF switch, and then check that the 12-pin operation panel connector is connected to connector P7 on the main P.C. board.	10*
E440 Error writing data to main P.C. board	・ Problem with main P.C. board. Replace the control box.	**
E441 Error reading data from main P.C. board	・ Problem with main P.C. board. Replace the control box.	**
E442 Problem with data on main P.C. board	・ The data on the main P.C. board is corrupted. Corrupt data was initalized. Turn the power off and then back on again.	
E450	・ Model selection could not be loaded from the head detector unit. Check that the head detector unit specifications are correct.	*
E451 Error writing data to head detector unit	・ Problem with head detector unit. Replace the head detector unit.	**

Error code	Possible cause	Page
E452 Head detector unit connection error	・ Is the 6-pin head detector unit connector inside the control box disconnected? Press the power OFF switch, and then check that the 6-pin head detector unit connector is connected to connector P8 on the main P.C. board.	10*
E701 Abnormally high power supply voltage	・ Does the power supply voltage match the control box voltage specifications? Check that the voltage matches. ・ Is the power supply voltage abnormally high? Check the power supply voltage. ・ Problem with control box. Replace the control box.	* * **
E705 Abnormally low power supply voltage	・ Is the power supply voltage abnormally low? Check the power supply voltage. ・ Problem with control box. Replace the control box.	* **
E710 Motor overcurrent	・ Is the electrical equipment connector inside the control box disconnected? Press the power OFF switch, and then check that the drive P.C. board connectors are connected to connectors P3 and P4 on the main P.C. board. ・ Problem with control box. Replace the control box.	* **
E791 Solenoid overcurrent	・ This is displayed when there is overcurrent in any of the solenoids (thread trimming, thread wiping, quick reverse or presser lifter). Check the resistances of the solenoids. ・ Problem with main P.C. board. Replace the control box.	* **
E901	・ DIP switch No. 4 inside the control box is set to ON. Press the power OFF switch and set DIP switch No. 4 to OFF.	*

If an error code that is not listed above appears or if carrying out the specified remedy does not solve the problem, contact the place of purchase.

15. 7-SEGMENT DISPLAY

0	1	2	3	4	5	6	7	8	9
0	1	2	3	4	5	6	7	8	9
A	B	C	D	E	F	G	H	I	J
A	b	C	d	E	F	G	H	I	J
K	L	M	N	O	P	Q	R	S	T
K	L	M	n	o	P	q	r	S	t
U	V	W	X	Y	Z				
U	v	W	X	Y	Z				

4268M

brother®

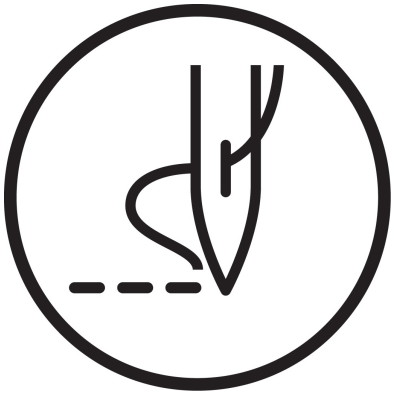

INSTRUCTION MANUAL

BROTHER INDUSTRIES, LTD. http://www.brother.com/

15-1, Naeshiro-cho, Mizuho-ku, Nagoya 467-8561, Japan. Phone: 81-52-824-2177

© 2008 Brother Industries, Ltd. All Rights Reserved.

S-7200C
SA9809-001 E
2008.07. B (1)