VCA 40 mod.02
Normale

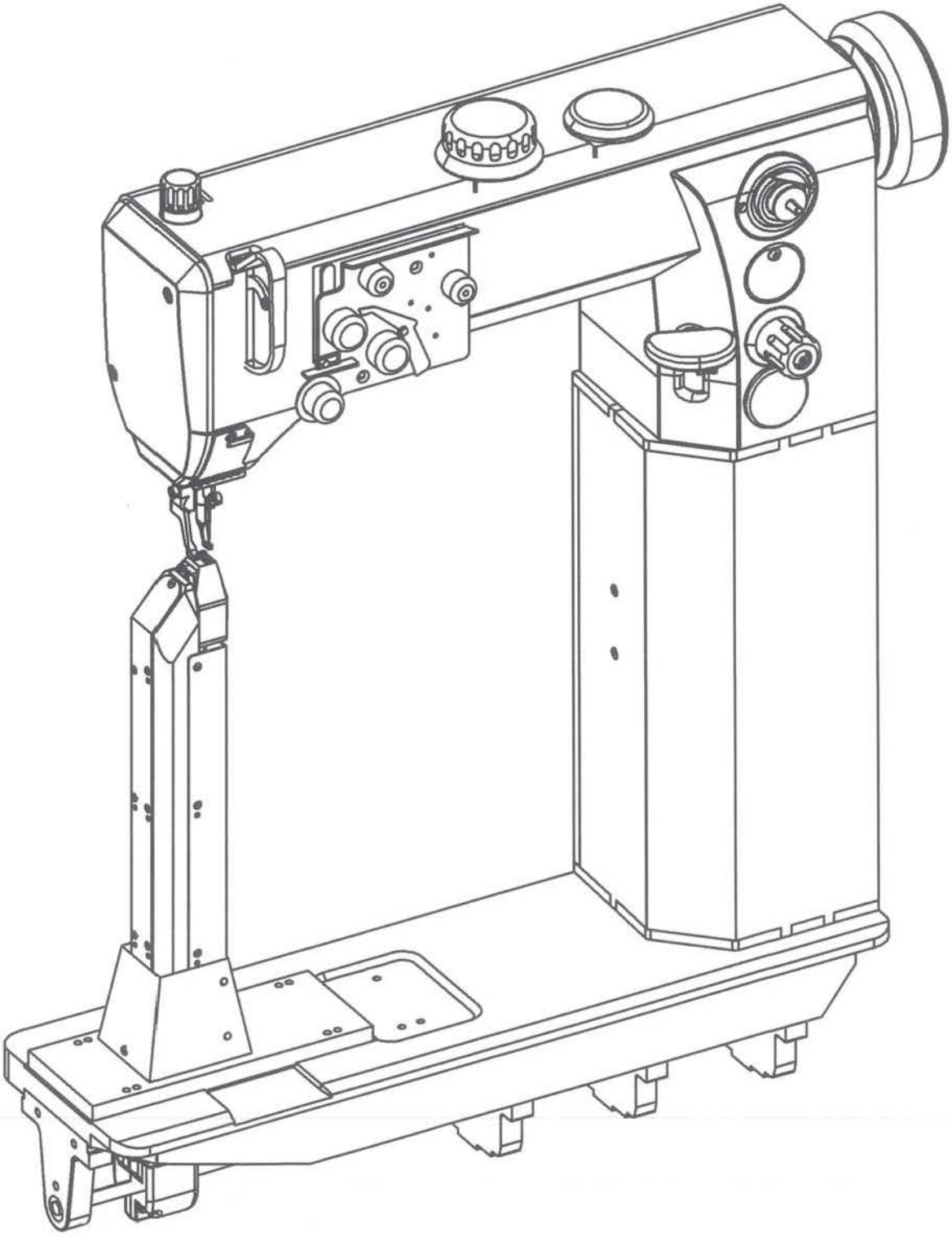

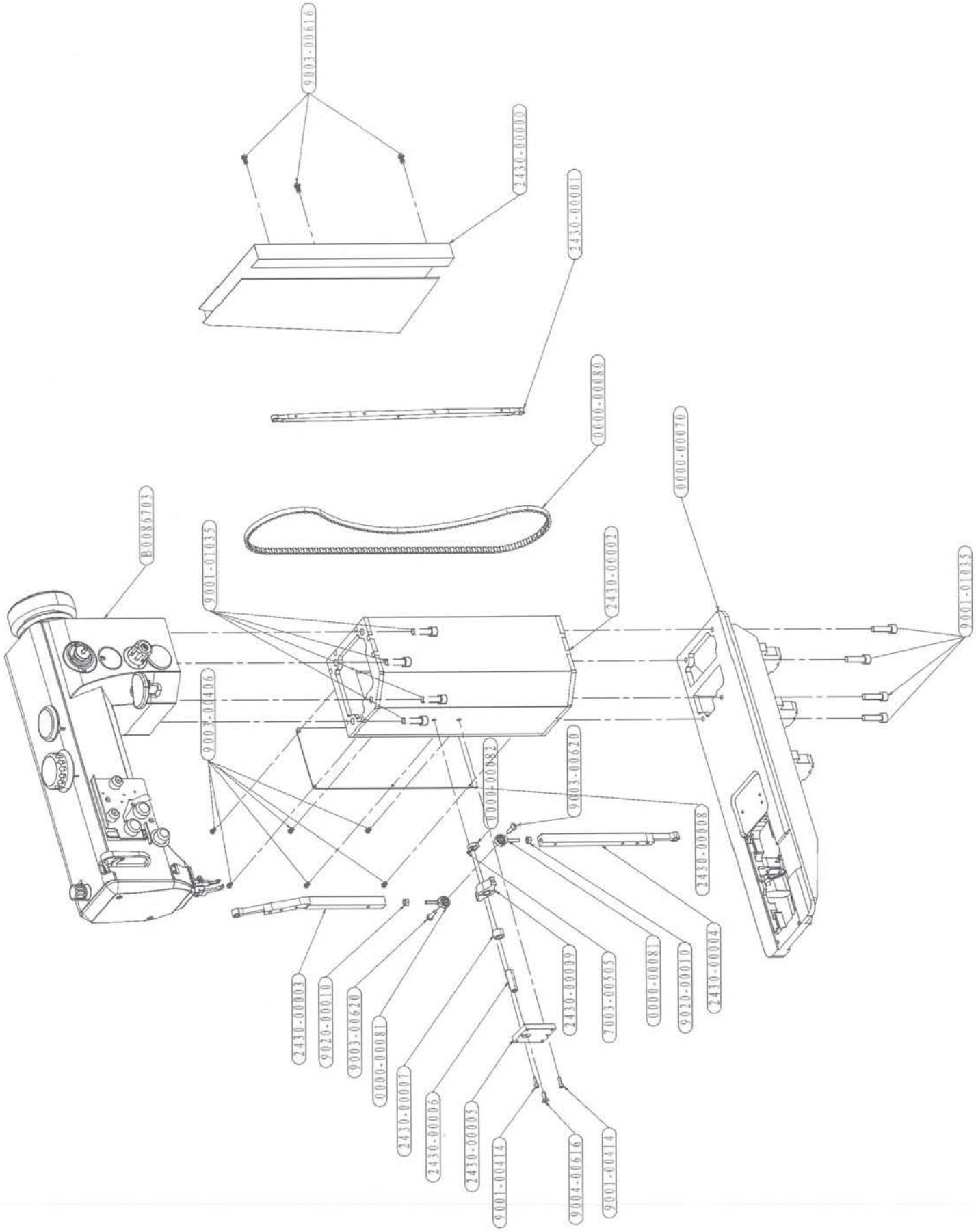

From the library of Merrow Superior - www.supsew.com • www.merrow.com

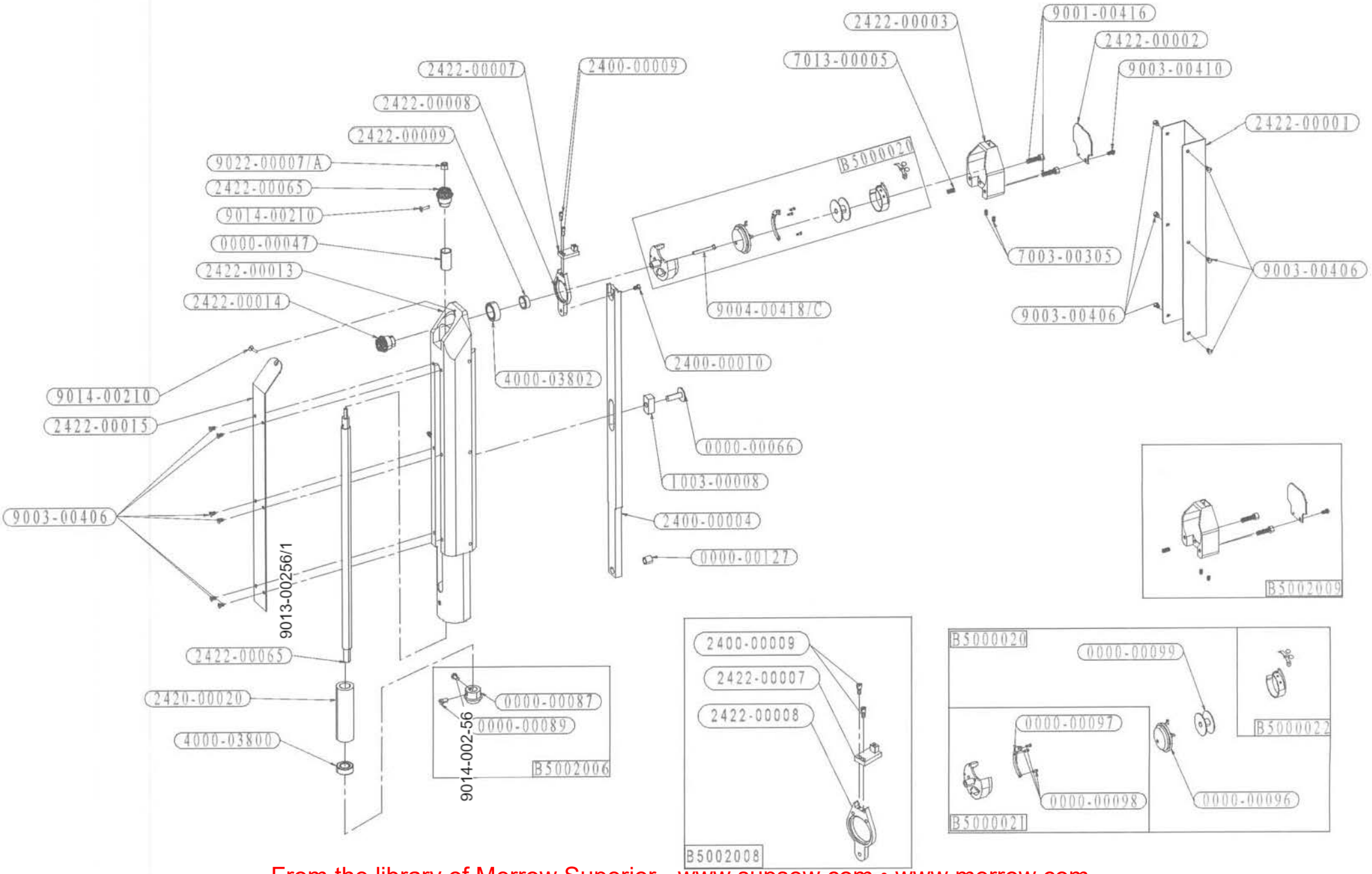

From the library of Merrow Superior - www.supsew.com • www.merrow.com

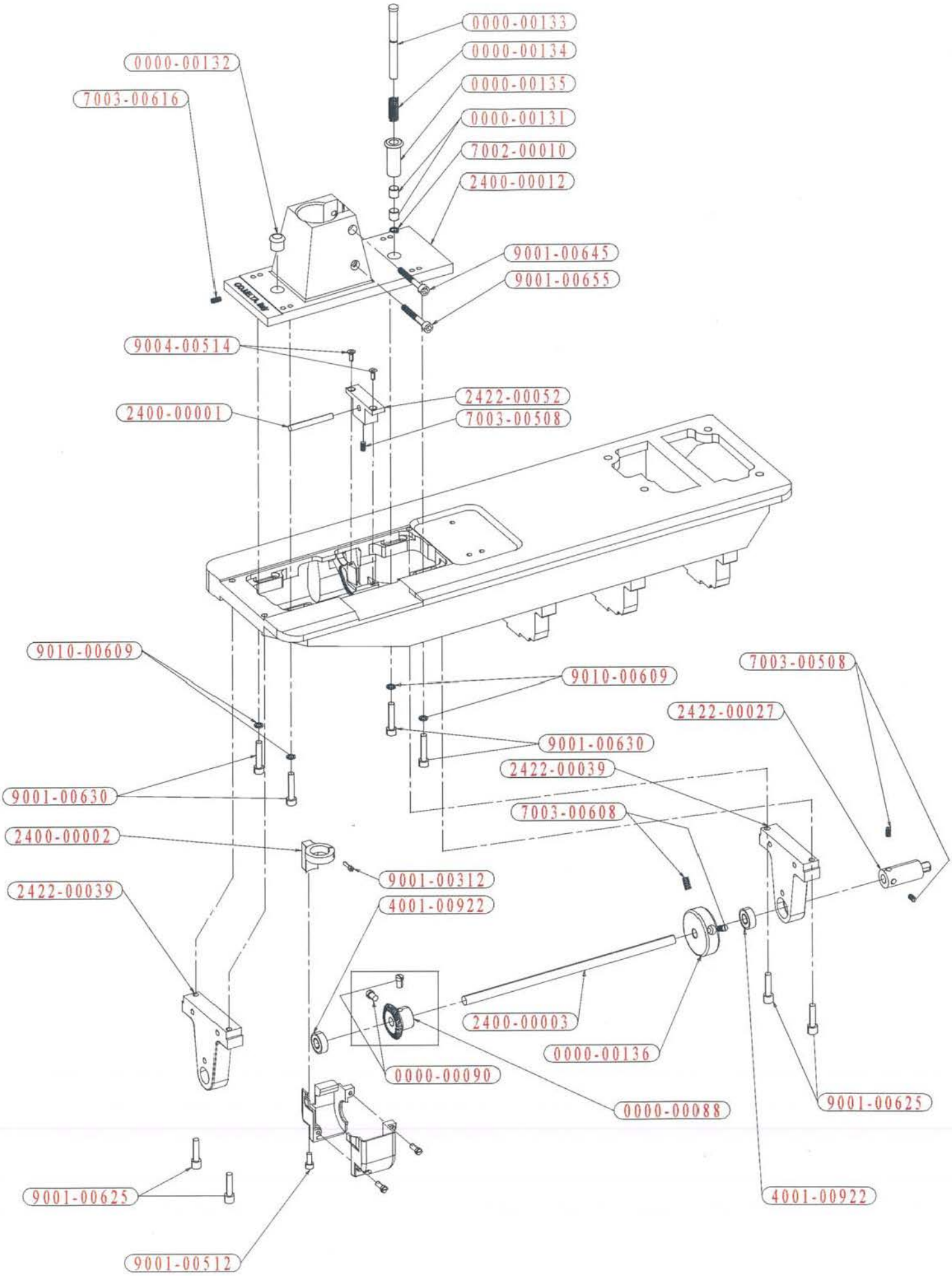

From the library of Merrow Superior - www.supsew.com • www.merrow.com