GLOBAL

BM 360 – BM 364

Blindstitch felling machine

spare parts &
instruction manual

目　录

FOR SAFETY OPERATION

INSTRUCTION MANUEL

FOR SAFE OPERATION

1. Safety symbols and definitions

Alert and illustration symbols are affixed on this instruction, our sewing machine, and device in order to prevent personal injury or danage for the safe operation. The symbols and their definitions are as follows:

(1) Alert symbols

This sign shows that wrong handling by neglecting the sign is supposed to occur the possibility of death or serious injury.

This sign shows that wrong handling by neglecting the sign is supposed to occur the possibility of injury or objective damage only.

(2) Illustration symbols

① The symbol "△" means "You must take care." (warning, caution)
The illustration in this triangle shows the meaning of the caution.
(The left illustration shows the caution for injury.)

② The symbol "⃠" means "You must not" do.(prohibited)

③ The symbol "●" means "You must" do.(forced)
The illustration in this black circle shows the meaning of the direction.
(The left illustration shows Be sure to connect earth line.)

2. Warning label and safety device

This describes the warning label addixed on our sewing machine and device and the caution for safety device.

(1)

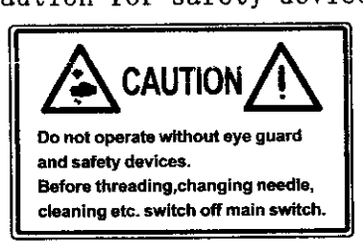

CAUTION IN OPERATION

Removing safety device and operation except sewing while power supply is on are prohibited. This label shows "Do not operate without eye guard and safety devices. Before threading, changing needle, cleaning, etc., switch off main switch."

(2)

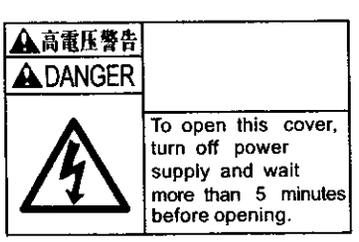

DANGER: WARNING OF ELECTRIC SHOCK BY HIGH-VOLTAGE

High-voltage applies in the control box. This may cause an elactric shock. This label shows "To open this cover, turn off power supply and wait more than 5 minutes before opening."

(3)

CAUTION FOR HIGH TEMPERATURE: DO NOT TOUCH STEPPING MOTOR AND SOLENOID

Stepping motor and solenoid may overheat if used continuously. To prevent a burn, take care not to touch. This caution label for high temperature is affixed on these parts for calling attention.

(4)

EARTH LABEL : BE SURE TO CONNECT EARTH LINE

If not connected earth line, static electricity may be generated and inflict injury on person . In addition, the malfunction of electric system may cause injury to hand or finger . This earth label"**BE SURE TO CONNECT EARTH LINE**"is affixed near the position connected earth line for calling attention.

(5)

EYE GUARD: TAKE CARE NOT TO CAUSE INJURY TO EYES

Eye guard is a protection for eyes . When removed the eye guard and operated, if broken the needle, your eyes may be caused injury . Be sure to set the eye guard at the fixed position. This caution label is affixed near the eye guard for calling attention.

(6)

BELT COVER: DO NOT INSERT FINGERS

If inserting your fingers in the belt cover, they may touch V-belt . This caution label is affixed on the belt cover for calling attention.

(7)

FINGER GUARD: DO NOT INSERT FINGERS

If bringing your finger above the finger guard , your finger may be stuck with the needle. Take care not to bring finger.

(8)

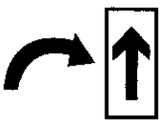

ROTATING-DIRECTION SYMBOL : CHECK CORRECT ROTATING DIRECTION

Check the rotating direction of pulley agrees with"**ROTATING-DIRECTION SYMBOL .**"

3. Basic concept for safety measures

3-1 Application and purpose

Industrial sewing machine should be used for improving productivity in the sewing industry. We do not recommend that you should use the sewing Machine for the applications which do not meet the above purposes.

3-2 Working environment

FOR SAFETY, DO NOT WORK IN THE FOLLOWING ENVIRONMENTS:

① The where atmosphere temperature and humidity give a bad influence the performance of sewing machine.
② The outdoors and the where sunlight is exposed directly.
③ Atmosphere containing dust or corrosive gases or flammable gases, etc.
④ The where voltage fluctuation exceeds ±10% of rated voltage .
⑤ The where sufficient power voltahe can not be obtained against the motor specifications .
⑥ The where a strong electrical or magnetic field is generated such as near high frequency transmitters or high frequency welders .

4. Cautions on each stage

CAUTION

4-1 Unpacking and transportation

(1) Confirm the top of the corrugated box with the indications printed on the box and open the box from the top.
(2) Never hold the parts near the needle or threading parts when removing the sewing machine head from the buffer of box.
(3) When carrying the sewing machine head, it is strongly recommended to have an assistant.
(4) Pay attention not to get excessive impact or shock when moving the sewing machine head with a pushcart.

4-2 Installation and preparation

CAUTION

4-2-1 Instruction and training

Operator and workers who supervise, repair or maintain the machine head and machine unit are reqired to have the adequate knowledge and operation akills to do the job safely. In order to establish such necessary conditions, it needs for the employer to plan and enforce the safety education and training to those workers.

CAUTION

4-2-2 Sewing table and motor

(1) Prepare a machine table (table top, table leg) that has enough strength to withstand the weight of the machine head and any reaction while operating
(2) Maintain a comfortable working environment with considering the lighting and the arrangement of sewing machine so that the operators can work smoothly.
(3) When installing the control box and the related parys on the sewing machine, take care about the posture of the worker.
(4) According to the instruction manual for thee motor, install it correctly.

FOR SAFE OPERATION

⚠ WARNING

4-2-3 Wiring

(1) Never connect the plug to power supply until assembly is finished.
(2) Fix securely the cable connectors connecting the sewing machine head, motor, and electric apparatus.
(3) Be sure not to apply excessive tension to the connection cables.
(4) Connect the cables near the driving parts apart from them.
(5) Take an earth to the designated position on the machine head.

⚠ WARNING

4-3 Caution before operation

(1) Take care not to attach lubricant, silicone oil, and grease on the eye or skin . Keep them away from children.
(2) Be sure to fill or drop lubrication oil to operate the sewing machine. Use special oil .
(3) Do not put your hand under the needle or near the moving part of the machine when turning on switch.
(4) When operating the sewing machine first time, make sure the rotating direction of pulley agrees with "**ROTATING-DIRECTION SYMBOL**"

⚠ WARNING

4-4 Warning while operating the sewing machine

(1) If the safety devices such as belt cover, finger guard, eye guard, etc. are equipped with, be sure to operate the sewing machine with these safety devices.
(2) Never put the finger, hair or the objects under the needle or close to the moving parts while operating the sewing machine.
(3) Be sure to turn off the power supply switch, when threading or replacing the needles.
(4) Never put your hand close to the knives (upper, lower), when operating the sewing machine with the trimming knives.
(5) Be sure to turn off the power supply switch, when terminating the sewing work or leaving the sewing machine.
(6) If malfunctioned, heard abnormal sound or felt bad smell while operating, be sure to turn off the power supply switch.

⚠ CAUTION

4-5 Maintenance, inspection, and repair

(1) Entrust the maintenance, inspection, and repair in the change of the skilled workers who have a special training.
(2) For the maintenance, inspection, and repair, be sure to turn off the power supply switch and make sure the sewing machine and motor completely stop, and then do the jobs. (If using a clutch motor, take care that the motor keeps turning for a while even after turning off the power supply switch.)
(3) Do not modify the sewing machine by the customer' s own judgement. Also, be sure to use the designated spare parts.

CM series

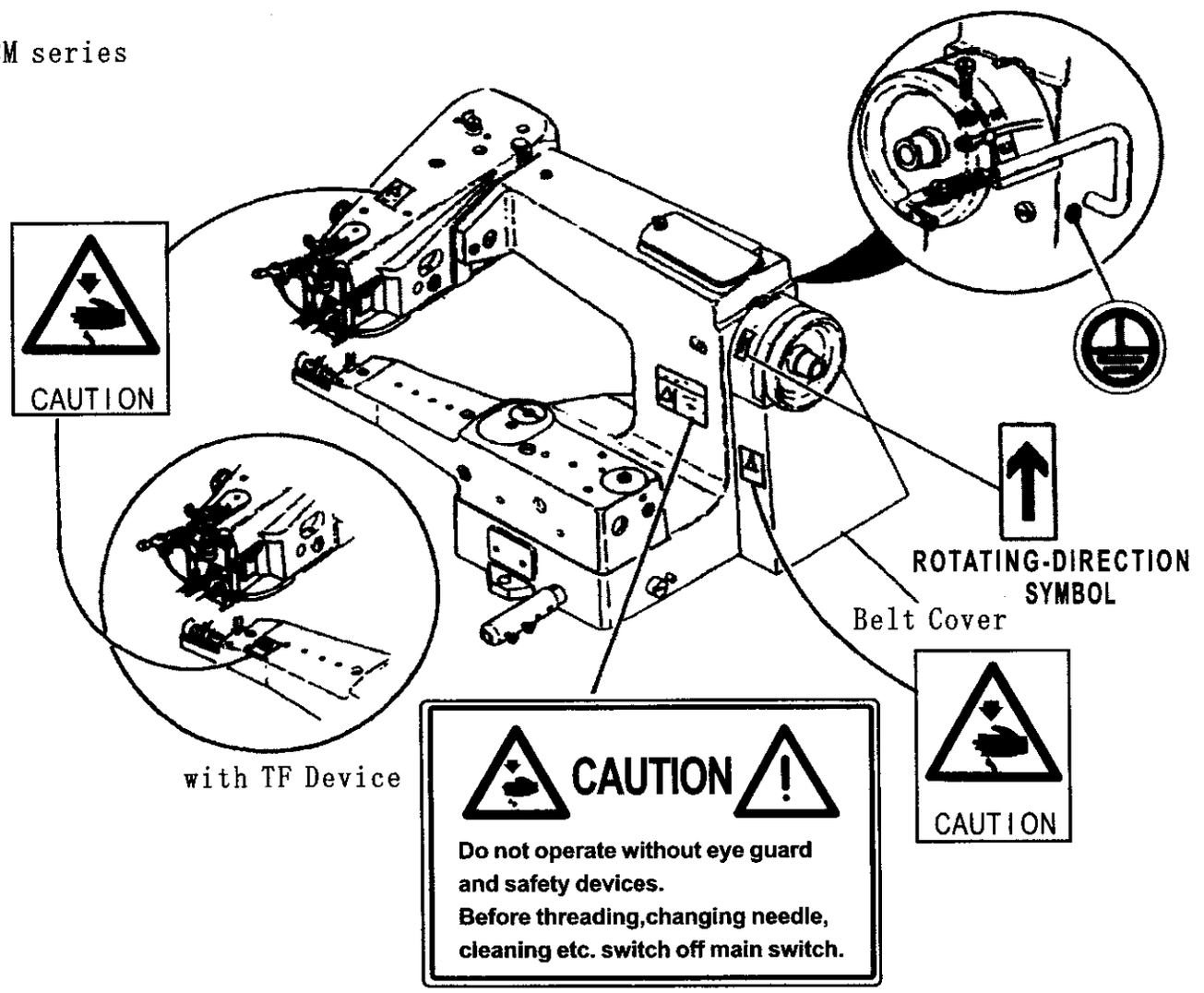

1. Installation

1-1 Drawing of table top cut out

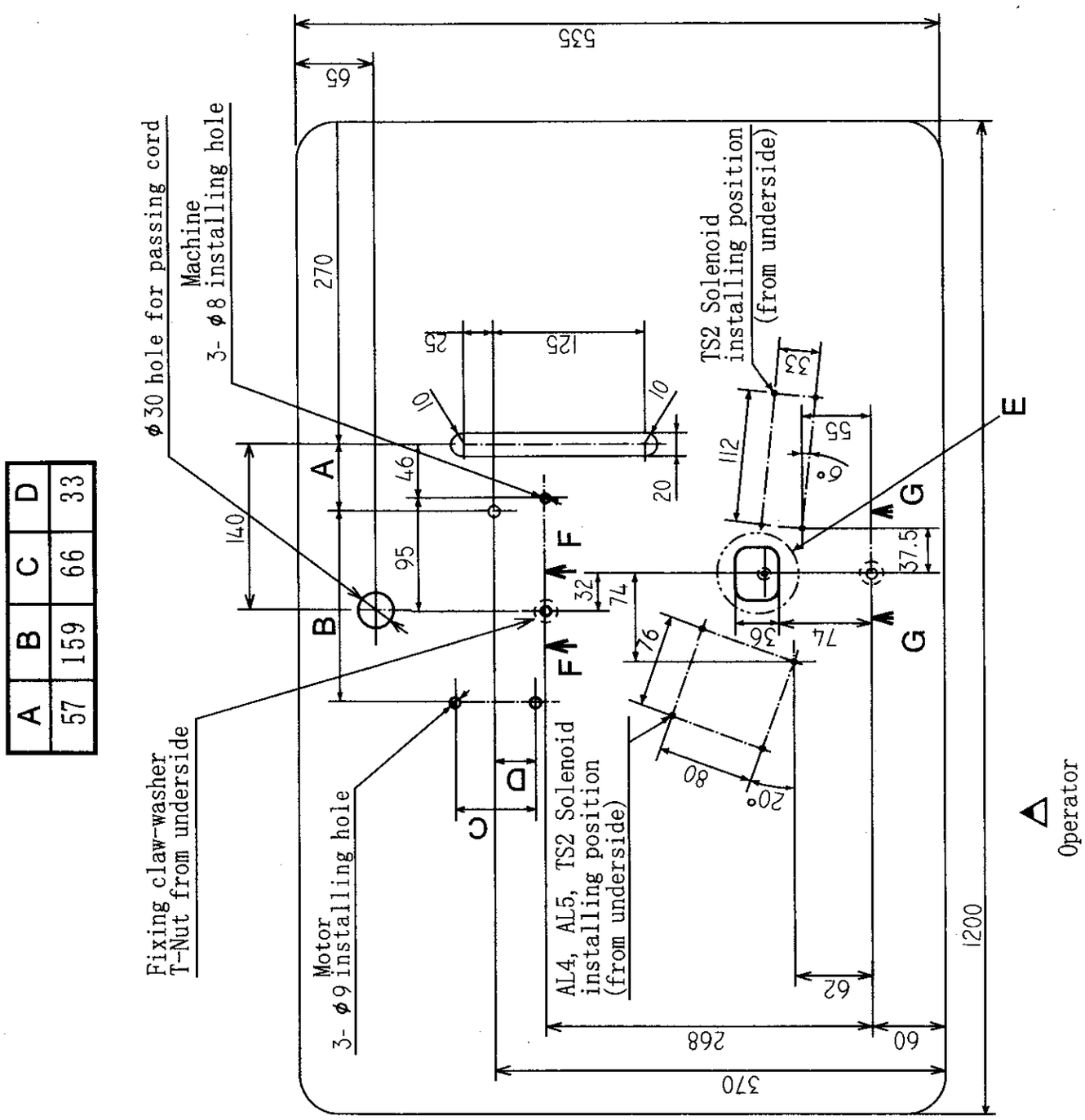

A	B	C	D
57	159	66	33

1-2 Installation of Sewing Machine

Place Felt Pad on Oil Receiver and mount the machine on the Pad.

The machine must be fixed securely with 3 sets of Bolts and Nuts on table taking care the parallelism between Motor Pulley and Machine Pulley.

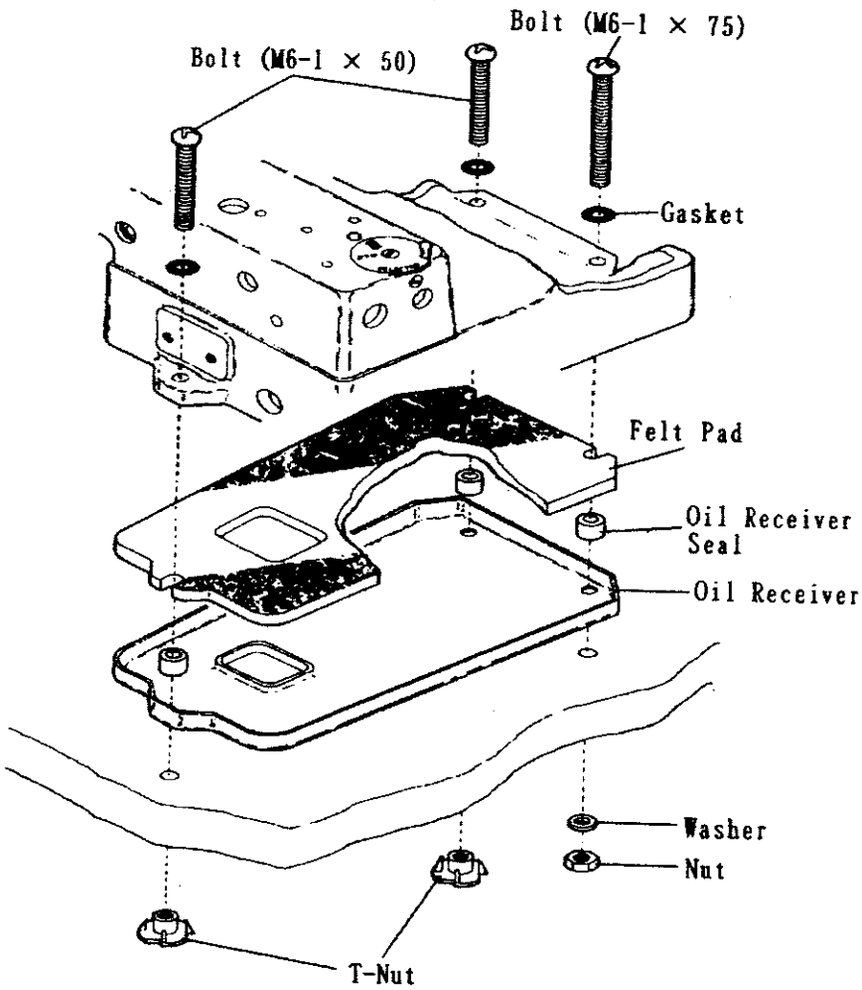

1-3 Installation of Belt Cover

For safe operation, be sure to install Belt Cover (Middle) and Belt Cover(Lower) and operate Machine.

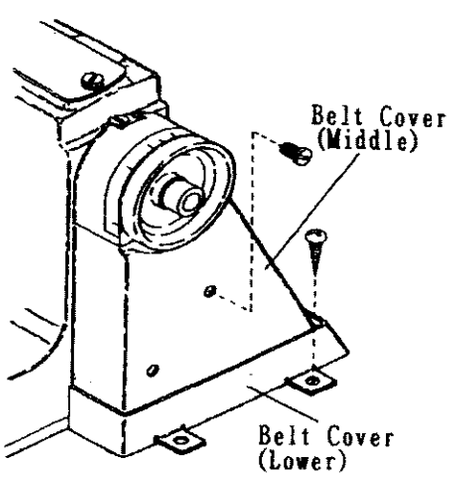

2. Sewing speed and rotating direction

The maximum sewing speed of this machine is 3,000 s.p.m. However, for the durability of the machine, it is recommended to operate at the speed of 2,500 s.p.m. for the initial one week and increase the speed gradually since then.
The rotating direction of pulley is clockwise as shown in the illustrstion.

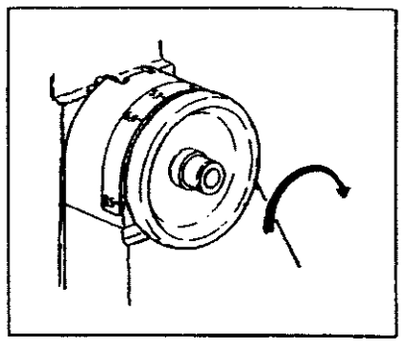

3. Motor and Belt

☆ For operating with AT, AL5, TS2, and TF Devioes, the following electronic motors should be used.
Single phase,200 ~ 240V:XL-554,XC-FY100
manufactured by
Mitubishi
3 phase,200 ~ 240V: XL-554,XC-FY100E-45KA
manufactured by Mitubishi

☆ For operating standard model and with"T" Device, the following clutch motor should be used.
3-phase, 4-pole, 250 W (or 220W)

Note:When operating with "T" Device, the above electronic motors should be used. The sewing operation will be increased efficiency.

M-type V-Belt with circumference of 37 inches should be used.
Motor must be positioned so that the center line of Belt Pulley aligns with that of Motor Pulley, when Motor Pulley is shifted to the left side by treadling Pedal.

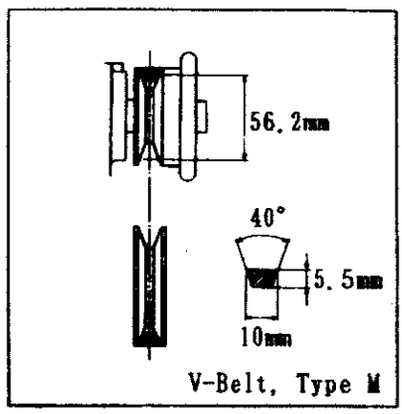

Outside Diameter of Motor Pulley	s. p. m.	
	50Hz	60Hz
65mm		2,000
70mm		2,200
80mm	2,000	2,500
85mm	2,200	2,600
85mm	2,500	3,000
115mm	3,000	

* Diameters shown on the table are those nearest to the calculated value at intervals of 5mm.

4. Feeding of oil

Oil must be fed without fail to the points shown below prior to the bperationevery day.

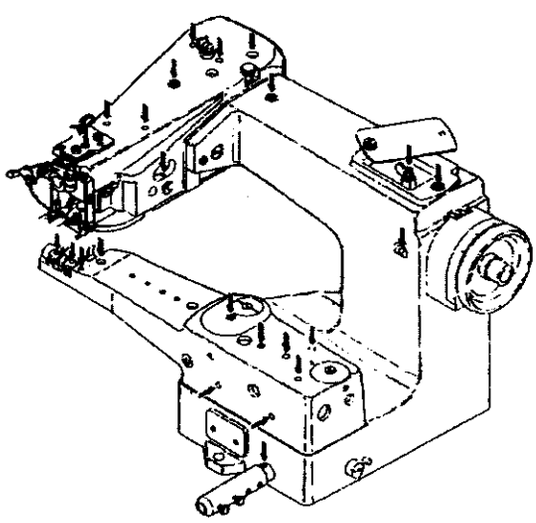

5. Propeopperation

5-1 Needle system

Use LW×6T of Drgan or Schmetz.
There are many sized of Needle, and most suited one for the sewing should be selected.

LW×6T #4 (No. 16)
LW×6T #3 1/2 (No. 14)
LW×6T #3 (No. 11)
LW×6T #2 1/2 (No. 9)

5-2 Setting of Needle

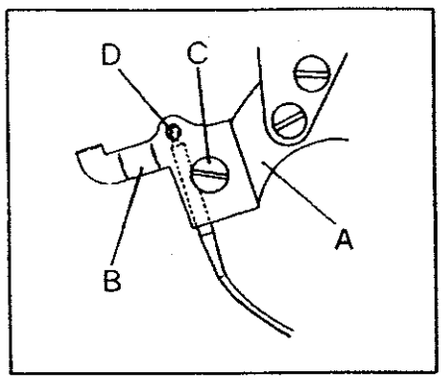

Turn Pulley by hand to move Needle Driving Lever(**A**) all the way to the left, then loosen Screw(**C**) to the extent that Needle Clamp(**B**) may not be disconnected.
Insert Needle securely up to Needle Stop Pin(**D**) on needle groove of the Driving Lever, then tighten Screw(**C**).

5-3 Change of Needle size

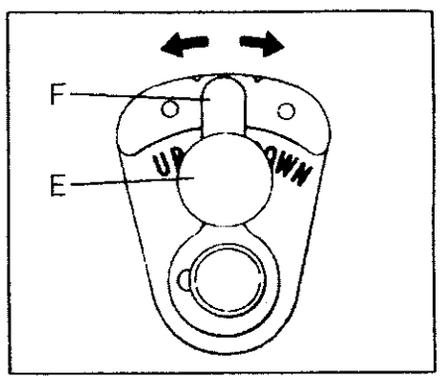

When, Needle size is changed, select the most suited ppsition to Looper Adjusting Eccentric for the Needle size.
When loosening Screw(E) for Looper Adjusting Eccentric (F) and set the mark to the graduation "**DOWN**" on Eccentric Bushing, there produces a clearance suitable for #2 1/2(No. 9) between Neeele and Looper.
Mid Posotion is suited for #3(No. 11) ane "**UP**" is suited for #3 1/2(No. 14).
At the shipment, it is adjusted to #3(No. 11).

5-4 Threading

Threading must be done correctly referring to the illustration.

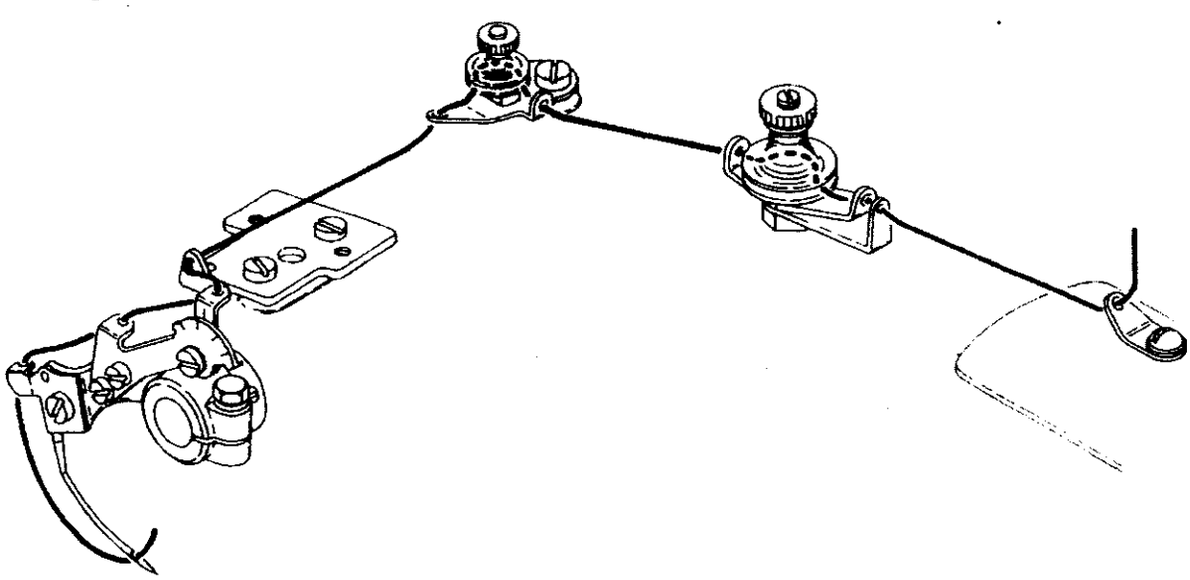

5-5 Thread tension

Thread tension should be adjusted as weak as possible without losing good balance of sewing. Turning Nut for Tension Post to the right, tension becomes strong and to the left, it becomes weak.

* The amount of thread pull-off will be decreased by moving Needle Thread PUll-off Eyelet(**A**) to the left and increased by moving to the right. Move Eyelet(**A**) to the right for thin fabrucs and to the left for thick fabrics.

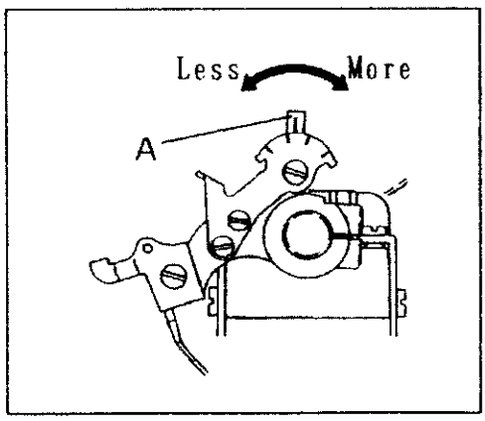

5-6 Adjustment of felling depth

Raise Knob(**B**) of dial style Ridge Forming Regulator and turn it to "**MORE**" to obtain more depth of felling stitch. Turn Knob(**B**) to "**LESS**" to obtain less depth of felling stitch.
Set the mark to the desired extent.

* Adjustment of Ridge Forming Regulator
  If the sufficient felling depth cannot be obtained within the adjusting range of Ridge Forming Regulator, remove Lock Screw(**C**) and adjust the depth by another screw in the recess.
  Turn this Screw to the right to obtain the shallow felling, and turn to the left for deep felling.
  Set the arrow mark on Ridge Forming Regulator to 4～6 and adjust to obtain the suitable felling depth. Then tighten Screw(**C**) as before

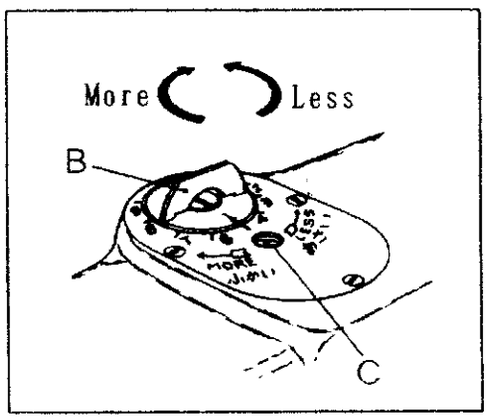

5-7 Adjustment of skipstitch sewing

CM-364, model machines gave skipstitch mechanism as a standard.
Skipstitch sewing can be made by operating Skipstitch Selector(**B**).
The skipstitch sewing is possible every other time by aligning the letter "**SKIP**" with the mark(**B**), while continuous felling sewing is possible by aligning it with the Mark "**NON SKIP**".
For aligning with the Mark "**MORE**", the rise of Ridge Forming Plate(**C**) changes from the maximum to a little less. Adjust so that Needle passes the center of lower part of Ridge Forming Plate(**C**) when the Plate(**C**) rises a little less.
(For CM-360, see page 15.)

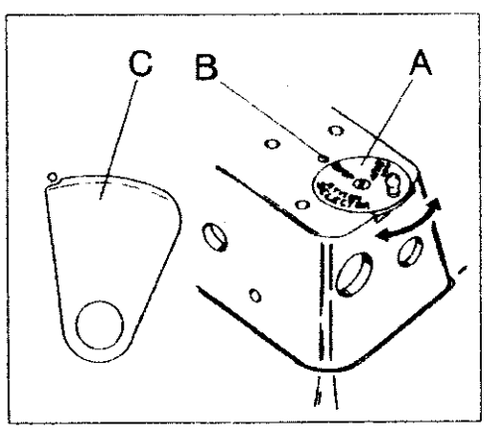

5-8 Adjustment of stitch length

Stitch length can be adjustde in 6 stages from 3.2mm to 8.5mm.
The right table shows stitch length and number of stitches per inch(25.4mm) or 30mm.
There may be a slight difference according to the kind of materials or other factors.

Stitch length	Stitches per	
	inch	30mm
8.5mm	3	3.5
6.4mm	4	4.7
5.1mm	5	5.9
4.2mm	6	7.1
3.6mm	7	8.3
3.2mm	8	9.4

* Change of stitch length
  The change should be made following the procedure below:
  ① Press in Push Button(A) lightly with left hand.
  ② Keep pressing the Button, turn Pulley with right hand.
  ③ The tip of Push Button put in the groove of Feed Regulator.
  ④ Press in Push Button(A) strongly, and set the Mark(B) to desired graduationof stitch length by turning Pulley.
  ⑤ After adjustment is completed, release Push Button(A).

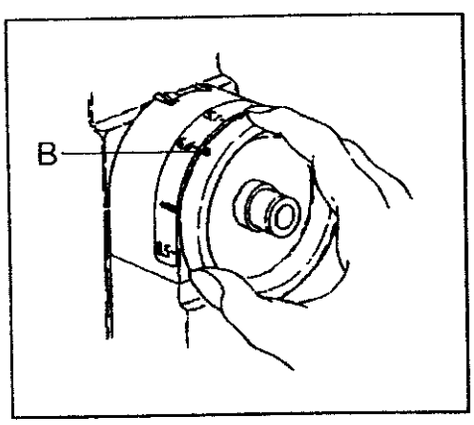

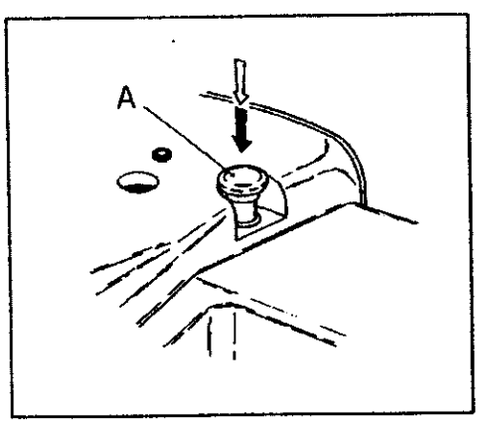

5-9 Stop position at the time of Thread Trimming

The position where the red Sticker(B) on the Graduations Plate of Belt Cover aligns with the mark (C) is the stop position of needle at the time of thread trimming when it comes to the extreme left.
Trimming thread at the sewing finish must be made at this position without fail.
The above is the same in case of machines with Manual Thread Trimmer (T Device) and with Automatic Thread Trimmer (AT Device).

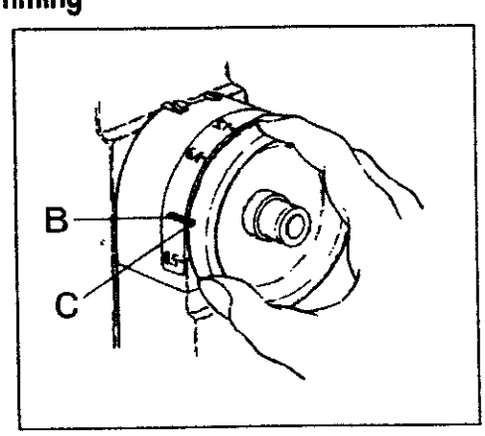

6. Appropriate adjustment

Machines are properly adjusted at the time of shipment, but if further adjustment is necessary because of the sewing conditions or other factors, it is advisable to refer to the following items.

6-1 Lateralrelation between Needle and Presser Foot Plate

①Install Presser Foot Plate to the machine.

②For the Needle to pass the center of Needle Groove on Presser Foot Plate, loosen Screw(A) of Needle Driving Arm. Then tighten Screw(A) tentatively.

③When Needle comes to the extreme right by turning Pulley, adjust the point of Needle to 1.5~2.0mm from the surface(B) of Presser Foot Plate.

④When Needle comes to the extreme left, make sure whether the tip of Needle keeps even with the surface(C) of the Plate.

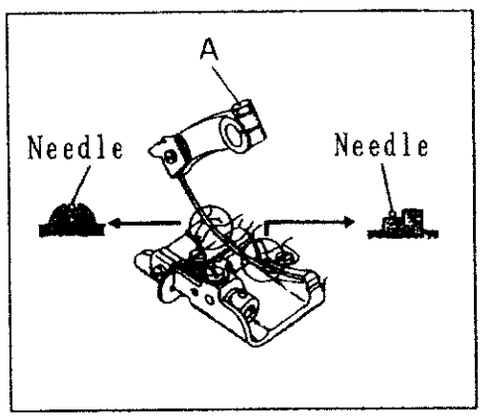

* If the tip of Needle is not in the position described above, loosen Screw(D) of Needle Driving Eccentric(E) to adjust the amount of strokes of Needle Driving Lever by turning Needle Druving Eccentric(E).
Turning the Eccentric(E) to the clockwise the amount of strokr increases and to the counterclockwise, it decreases.
At this time, the mark ". " of (E) on the Eccentric (E) must always face downward.
Continue adjusting to obtain the position mentioned above.
Tighten each Screws without fail after adjustment.

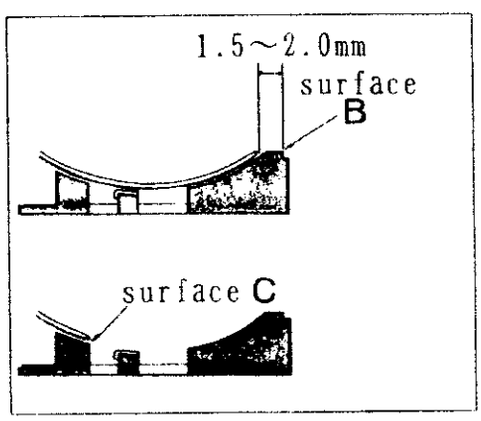

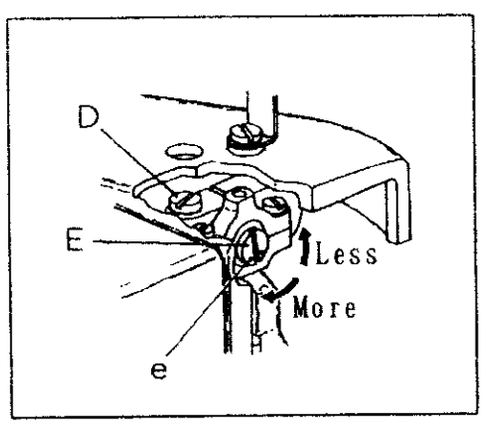

6-2 Vertical relation between Needle and Presser Foot Plate

After fixing lateral relation of Needle, loosen Screws(F) of Presser Foot Plate Support and turn Adjusting Screws(G) to adjust the vertical position of Presser Foot Plate.
Adjust so that the space between Needle point and Needle Groove(H) of Presser Foot Plate is 0.1mm, Needle point lightly touches Needle Guard(I), and Needle point is slightly pressed by Presser Foot Plate at the position of 6mm away from the surface(B) on Presser Foot Plate.

6-3 Setting and adjustment of Ridge Forming Plate

Ridge Forming Plate(A) must be set correctly to come to the center of the groove on Presser Foot Plate(B) following the procedure below.

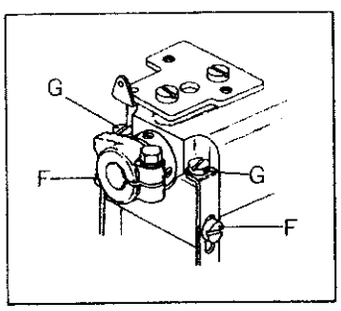

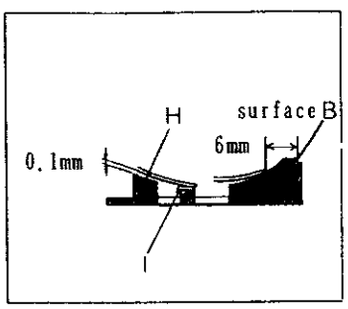

① Ridge Forming Plate Cradle(C) must be adjusted to move smoothly without play by Pivot Bearing Screw(D), after this, Screw(D) should be fixed by Screw(E).
② Loosen Screw(G) of Ridge Forming Plate Shaft Collar(F) and Screw(I) of Ridge Forming Plate Shaft Lever(H).
③ Move Ridge Forming Plate Shaft(J) so that Ridge Forming Plate(A) comes to the center of the groove on Presser Foot Plate(B), and apply the Shaft Collar(F) to the edge of Cradle(C), then tighten Screw(G).
④ Turn Pulley to the rotating direction. When needle point comes to the top of Ridge Forming Plate(A) give the distance of 6mm between the edge of the Plate and the center of Needle. Then tighten Screw(I) of Ridge Forming Plate Shaft Lever(J) with no play in the Shaft.

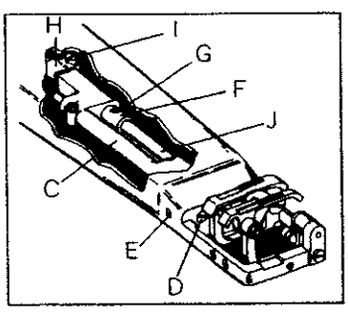

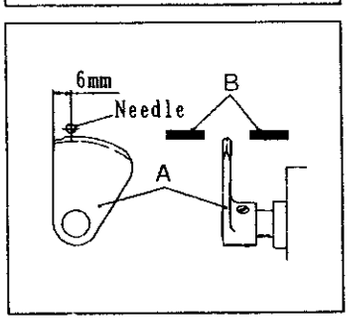

6-4 Pressure of Presser Foot and its adjustment

Presser Foot have two functions: one is to press down fabric by the pressure of 2 springs against the back side of Presser Foot Plate to prevent it from shifting at the time of felling by Needle, and the other is to keep feeding smoothly.
In case of uneven in stitches because of sewing speed, adjust to get proper pressure by turning Adjusting Screws(B).

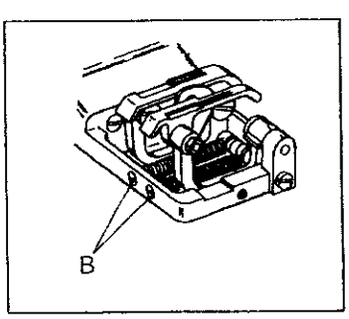

6-5 Adjustment of Feed Dog

Set stitch length at 8.5 on the graduations.
When Needle moves to the left from the extreme right and its eye comes to the point(C) of Presser Foot Plate, the distance between Needle and top of Feed Dog(D) must be 5.0~6.0mm.
To make this adjustment, loosen the Screw(E).
At this time, teeth of Feed Dog must be even with bottom face of Presser Foot Plate.

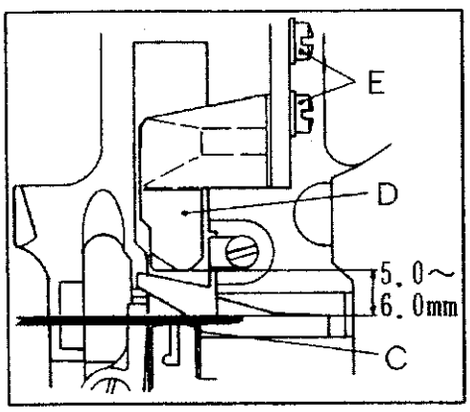

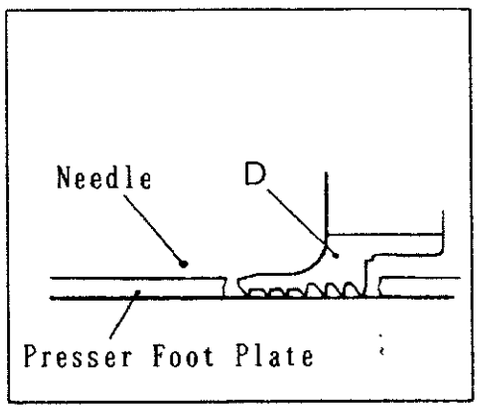

6-6 Adjustment of Cloth Retainer

Adjust so that the upper edge of Cloth Retainer is as close to the Needle as possible.
The adjustment is made by loosening Screw(F) and turning Cloth Retainer Adjusting Pin(G) left or right.
When the Needle fells fabrics, Retainer(H) must hold them tightly on kidge Forming Plate.
If this holding is weak, the fabric moves, causing skipping stitch. In this case, move Cloth Retaining Adjusting Lever(I) to the direction(J) to get proper pressure.

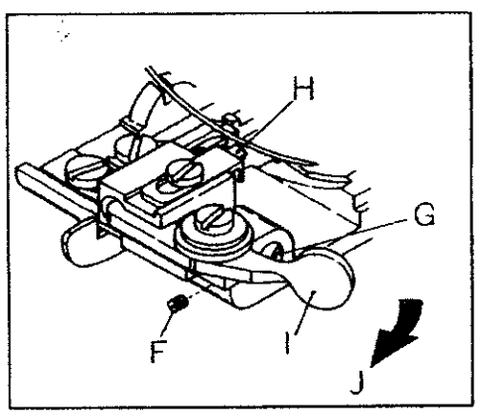

5-7 Adjustment of Looper

At the shipment, adjustment is made to cover needle size#2 1/2~#3 1/2 by changing Looper Adjusting Eccentric, as mentioned in clause 8-3. But at the time of readjustment, as the adjustment of Looper of this machine is very subtle because of their intricated movement, various kinds of adjustment must be made (examole: adjustment of Looper Ball Joint Adjusting Eccentric change of timing for Looper Driving Crank, etc.) And these adjustments are related with those of other parts, adjust the machine carefully to get the best condition, taking these factors into consideration.

* Adjustment of Looper should be made on the basis of Needle #3 by turning Pulley to the rotating direction as follows:

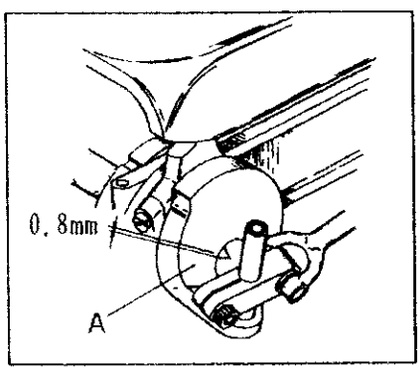

① Set the mark on Looper Driving Crank(A) at about 0.8mm inside from the left edge of V-groove of Main Shaft.

② When the top of longer finger of Looper(B) comes to the center of Needle, it must pass 1.5 2.0mm from Needle eye. Adjustment is made by loosening Screw(C) and moving Adjusting Eccentric Bushing(D) right or left.
At the same time, the longer finger should be as close to the Needle as possible without touching the Needle.
This adjustment is made by turning Adjusting Eccentric Bushing(D).

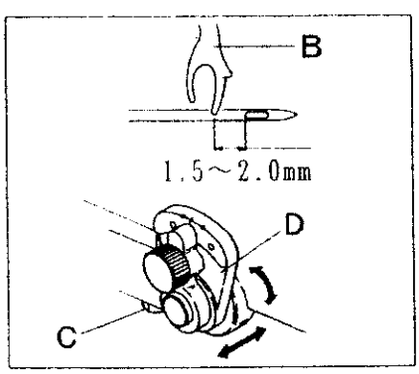

③ Next, when Looper(B) turns over and comes to the left side of Presser Foot Plate, relation between Needle and Looper, as shown in Fig.1, must be adjusted in order that the point of Needle and the side of Looper is even, while Needle is on the stepped part of Looper(B) (as shown by dotted line in the figure.)
Furthrtmore, when the shorter finger meets the center od Needle, Needle must be adjusted to pass the center of Looper Yoke or a bir lower part of it. (Fig.2)
This adjustment is made by turning Adjusting Eccentric Bushing(D).

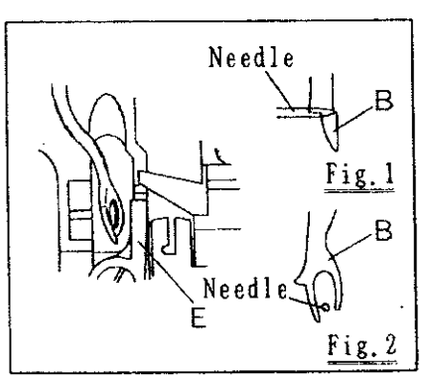

④ Bring the shorter finger of Looper(B) as close to Needle Guard(E) as possible without touching it.
And when Looper comes to the right side of Chaining Finger(F) of the Presser Foot Plate, the clearance between the shorter finger and the Chaining Finger must be less than 0.8mm.
The adjustment is made by moving Adjusting Eccentric Bushing(D) right or left.

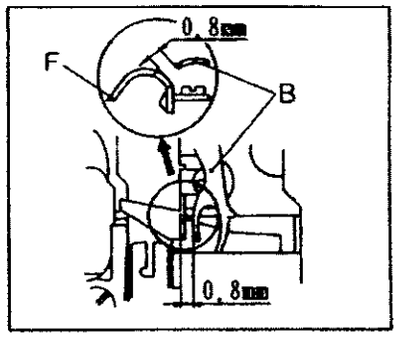

* After above adjustment, change #2 1/2 and #3 1/2 again and position Looper Adjusting Lever at "DOWN" and "UP" respectively then check the parallelosm between Needle and Looper.
* If satisfactory result is not gained in spite of these adjustments mentioned above, change the position of the mark on Looper pivot Crank(A) and readjust the timing of Looper .
The adjustment of the mark must be made in the range of 0.8mm left or right from the point 0.8mm inside of V-groove.
* Illustration of Looper Garrier is shown below.
Refer to it when reassembly of Looper or the like is necessary.

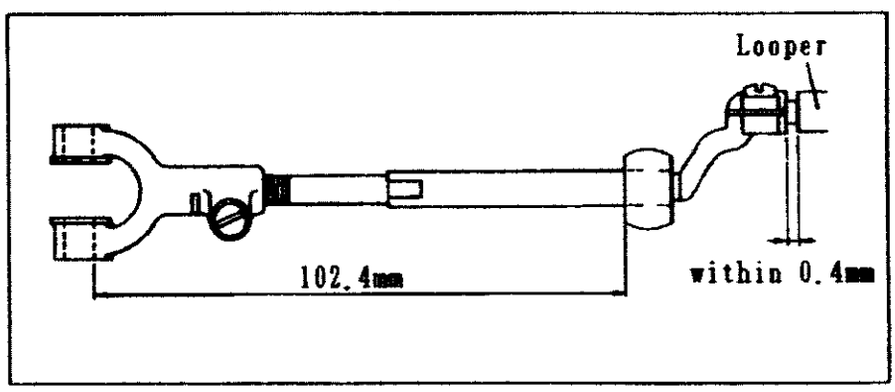

6-8 Adjustment of Automatic Thread Tension Mechanism

☆ When Needle moves to left and the left side of needle eye comes to the point (A) of Presser Foot Plate, Tension Disc(Uppe) begins to open.
When Needle moves to right and the left side of needle eye passes from the middle of Needle Groove on Presser Foot Plate to the right side [the point (B)], Tension Disc closes.
☆ For adjusting the opening amount of Tension Disc, loosen Nut (D) and turn Tension Post (E).
To increase the amount, turn tension Post(E) clockwise .
To decrease the amount, turn Tension Post(E) counterclockwise.

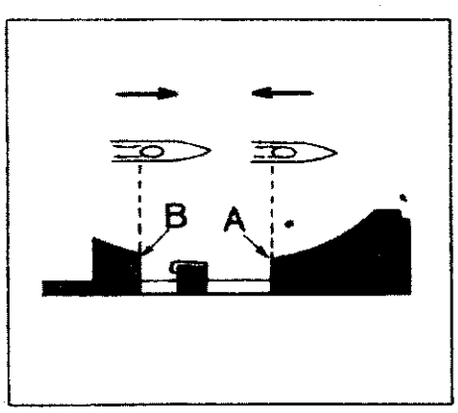

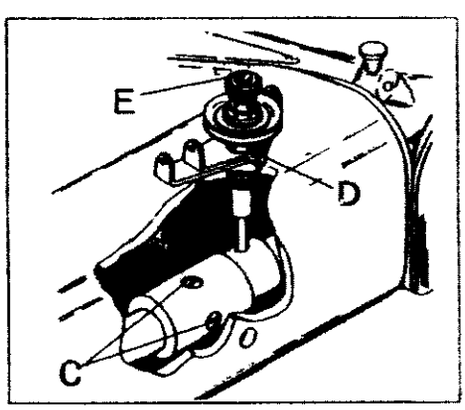

-9 CM-364

et the stitch length to "8.5" when making the following adjustment .

① When Main Feed Dog(A) comes to the foremost position, with the distance of 10mm between Need and the tip of the Feed Dog, fix the Feed Dog with Screw(B).
Set the teeth surface flush with the bottom surface of Presser Foot Plate.

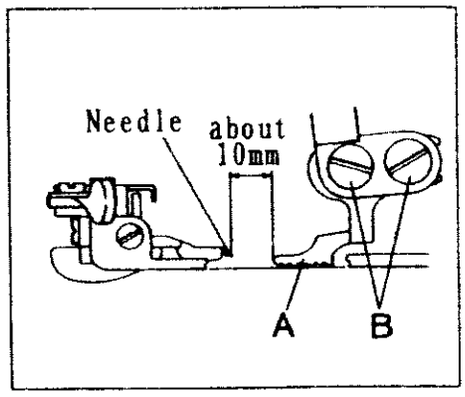

② When Main Feed Dog(A) comes to the foremost position, loosen Fixing Screw(C) and move Diffetential Feed Control Lever(D), and at the position where Differential Feed Dog(E) does not move, tighten Screw(G) of Differential Feed Regulator(F). Fix the height of Differential Feed Dog(E) to be same as that of Main Feed Dog (A) when the Main Feed Dog comes to the foremost position. The adjustment is made by loosening Screw(H).

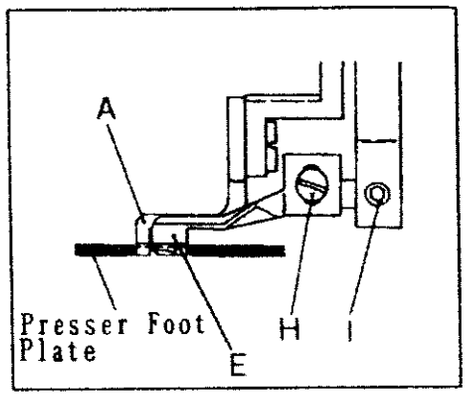

Adjust the lateral position of Differential Feed Dog(E) so that left side of differential Feed Dog(E) lightly contacts to the right side of Main Feed Dog(A) . The adjustment is made by loosening Screw(I).

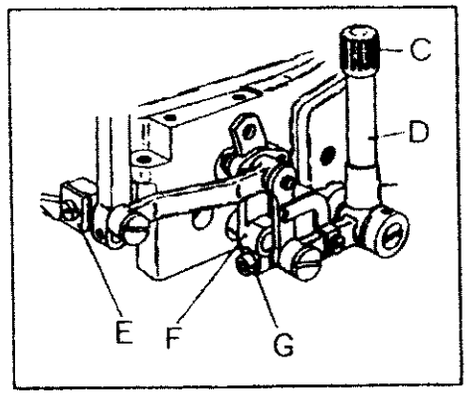

5-5
Th
po
Tu
be
*

5-6
Ra
an
fe
le
Se
*

5-7
Cl
m
S
S
T
b
w
a
F
F
l
c
w
(

零 配 件 系 列 表

PARYSLIST

CM-364

MISCELLANEOUS COVERS

Ref. No.	Parts No.	Description	品　　名	Amt. Req.
1	4010000	Machine Frame Unit	机架	1
2	0080746	Top Cover	顶盖板	1
3	000559	Conical Spring Washer	垫片	1
4	006147	Screw(3/16-32×6.4)	螺丝	1
5	0080144	Head Cover(Rear)	后盖板	1
6	004475	Screw(3/16-32×7.9)	螺丝	3
7	4010012	Head Cover	侧盖	1
8	006869	Screw(1/4-24×15.9)	螺丝	1
9	4010004	Finger Guard	护手装置	1
10	009526	Screw(9/64-40×4.4)	螺丝	1
11	390068	Brand Name Plate	商标牌	1
12	000726	Rivet	铆钉	2
13	4109403	Model Plate	型号牌	1
14	4010015	Arm Cover	端面盖	1
15	004481	Screw(3/16-32×11.5)	螺丝	1
16	4010031*	Cloth Plate	面板	1
17	004641	Screw(1/4-24×12.7)	螺丝	1
18	0093864	Seal Plug	橡	1
19	0080122	Cloth Plate Hinge Pin	面板固定销	1
20	0080123	Collar(12.71×21×8mm)	挡圈	1
21	003554	Screw(7/32-32×4.8)	螺丝	2
22	4010018	Cloth Plate Hinge	面板支架	1
23	005566	Screw(1/4-28×25.4)	螺丝	2
24	003642	Screw(1/4-24X8)	螺丝	2
25	0080125*	Cloth Plate Latch Pin	面板闩销	1
26	009921*[005662]	Screw(M6-1×11)[1/4-20×12.7]	螺丝	1
27	0080126	Cloth Plate Spring Pin	面板弹簧销	1
28	0080127	Cloth Plate Spring(Large)	面板弹簧（大）	1
29	0080128	Cloth Plate Spring(Small)	面板弹簧（小）	1
30	004551	Screw(7/32-32×13)	螺丝	3
31	0080293	Belt Cover(Upper)	上皮带盖	1
32	004555	Screw(7/32-32×9.5)	螺丝	1
33	0080118	Pulley Graduation Plate	皮带轮刻度标尺	1
34	000960	Sticker	标签	1
35	0080297*	Belt Cover(Middle)	中皮带盖	1
36	4010047*◆	Belt Cover(Lower)	皮带盖固定架	1
37	006905*◆	Wood Screw(φ5.1×20)	木螺丝	2
38	003570	Screw(13/64-32×10)	螺丝	2
39	4012080	Skipstitch Selector		1
40			跳缝调节器	
41	0080644	Skipstitch Cam Bushing	跳缝凸轮套筒	1
42	0080643	Skipstitch Cam	跳缝凸轮	1
43	003556	Screw(7/32-32×10.3)	螺丝	1
44	0080503	Skipstitch Selector Ball	跳缝调节器钢珠	1
45	0080675	Skipstitch Selector Ball Spring	跳缝调节钢珠弹簧	1
46	000721	Leading Rivet	铆钉	1
47	0080154*	Felt Pad	毛毡垫子	1
48	0080155*	Oil Reciever	底盘	1
49	0080153*	Oil Reciever Seal	橡胶垫	3

1

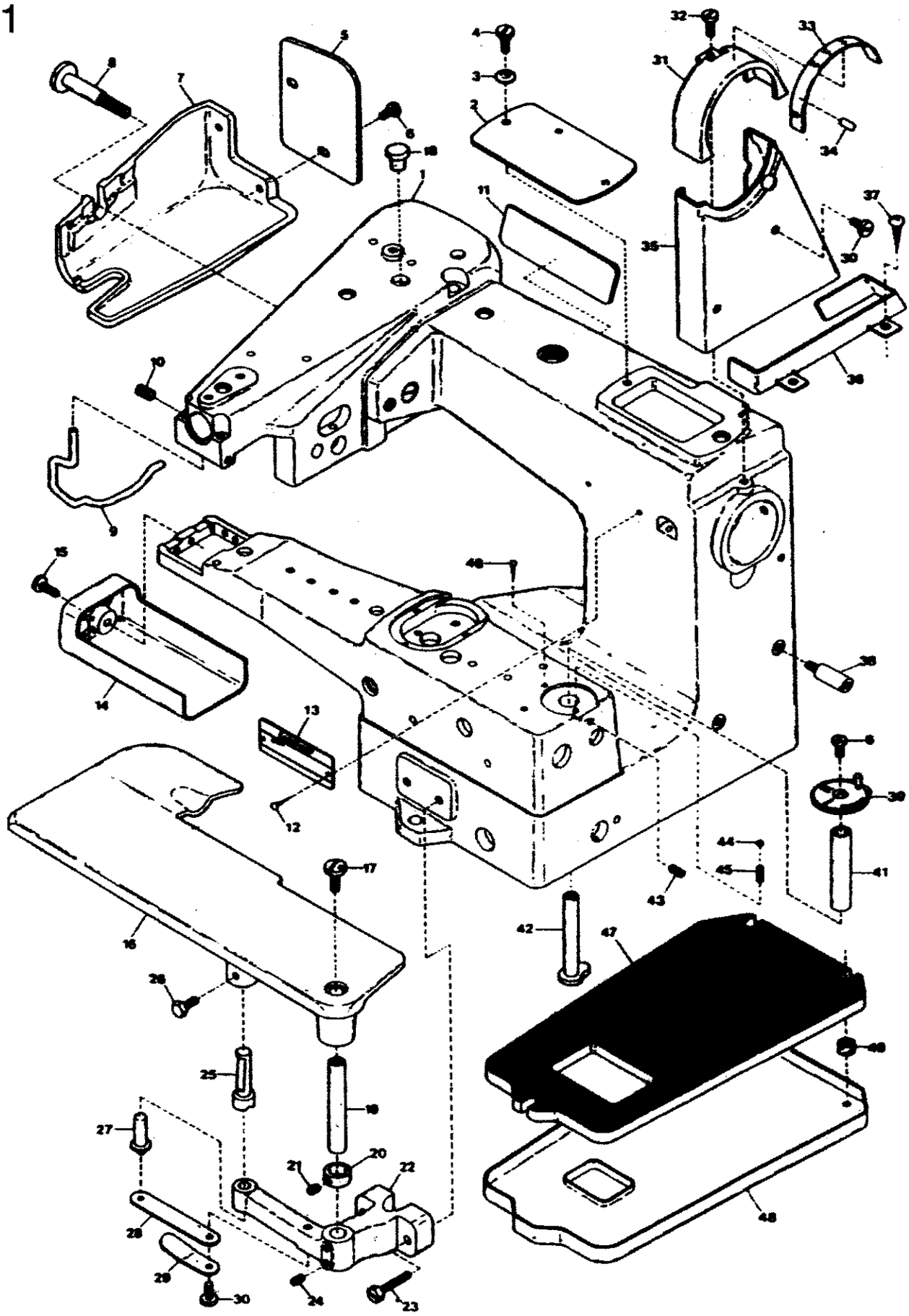

THREAD EYELETS, BUSHINGS & OILING SPOTS

2

Ref. No.	Parts No.	Description	品　　名	Amt. Req.
1	4010008 ◦	Thread Tension Mechanism, C. Set	线张力组件	1
2	000182	Thread Tension Spring Adjusting Nut	压线弹簧调节螺母	1
3	0020126	Tension Spring Bushing	压线弹簧套筒	1
4	0020125	Thread Tension Spring	压线弹簧	1
5	4010009	Thread Nipper Spring Holder	压线弹簧支架	1
6	0020124	Tension Disc	压线板	1
7	006560	Tension Post	压线柱子	1
8	000364	Nut(1/4-24)	螺母	1
9	0080745	Tension Disc Eyelet	压线圈孔	1
10	4010010	Tension Disc Eyelet(Lower)	压线圈孔（下）	1
11	0080741	Tension Post Support	顶线板螺丝	1
12	0080742	Tension Release Pin	顶线杆	1
13	0033764	Thread Eyelet	过线器	1
14	000532	Washer	垫片	1
15	001330	Screw(9/64-40×3.8)	螺丝	1
16	0080131	Oil Cup	油盖	4
17	310083◆	Oil Wick(Woolen Yarn)(ℓ=250mm)	吸油绳（棉制纱线）	4
18	0080132	Oil Tube(7.9mm)	注油管	6
19	000360	Thread Tension Spring Adjusting Nut	压线弹簧调节螺母	1
20	0035813	Supplementary Tension Spring	压线辅助弹簧	1
21	0037108	Supplementary Tension Disc	压线板	2
22	001818	Tension Post	压线杆	1
23	4010011	Supplementary Thread Eyelet	过线孔	1
24	004474	Screw(3/16-32×6.4)	螺丝	1
25	0080136	Oil Tube(53.2mm)	注油管	1
26	0060170[0080393]	Thread Eyelet(Front)	过线器（前）	1
27	007006[004471]	Screw(9/64-40×4)[3/16-32×9.5]	螺丝	1
28	0080200	Main Shaft Bushing(Right)	主轴套筒（右）	1
29	003643	Screw(1/4-24×14.3)	螺丝	1
30	0080204	Main Shaft Bushing(Left)	主轴套筒（左）	1
31	0080220	Needle Driving Shaft Bushing(Rear)	针杆轴套筒（后）	1
32	0080221	Needle Driving Shaft Bushing(Front)	针杆轴套筒（前）	1
33	0080511	Bushing	套筒	2
34	0080305	Knee Press Shaft Bushing	升降压杆主轴套筒	1
35	0080135	Oil Tube(38.1mm)	注油管	2

2

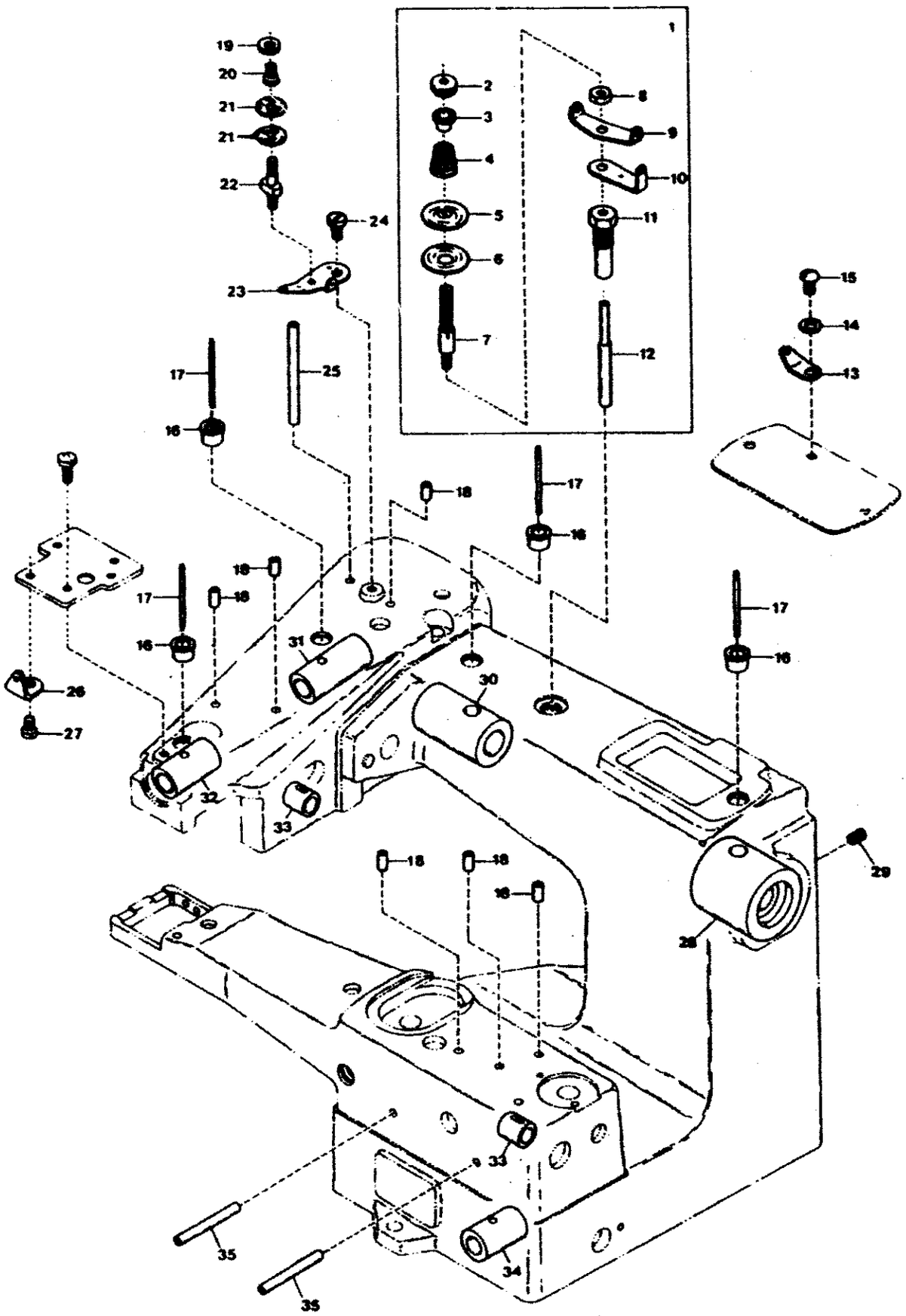

◆EYE GUARD & FINGER GUARD

3

Ref. No.	Parts No.	Description	品　　名	Amt. Req.
1	4010042	Eye Guard, C. Set	挡针板	1
2	4010044	Eye Guard Support	挡针板支架塑料片	1
3	4010043	Eye Guard	挡针板	1
4	110038	Screw(M2.5-0.45×4.5)	螺丝	2
5	006004	Screw(11/64-40×9.7)	螺丝	1
6	000010	Conical Spring Washer	锥行弹簧垫片圈	1
7	000334	Nut	螺母	2
8	009853	Screw(11/64-40×6.5)	螺丝	1
9	4010045	Eye Guard Bracket	挡针板支架	1
10	005541	Screw(11/64-40×9)	螺丝	2
11	0024302☆	Finger Guard Stay	护手装置支柱	2
12	110012☆	Screw(M4-0.7×5)	螺丝	2
13	4010046☆	Finger Guard(Right)	护手装置（右）	1
14	2121227	Spacer	垫块	2
15	0082001	Supporting Plate	支架板	1
16	005047	Screw(3/16-32×9.5)	螺丝	2
17	4010048	Eye Guard Bracket	挡针板支架	1

3

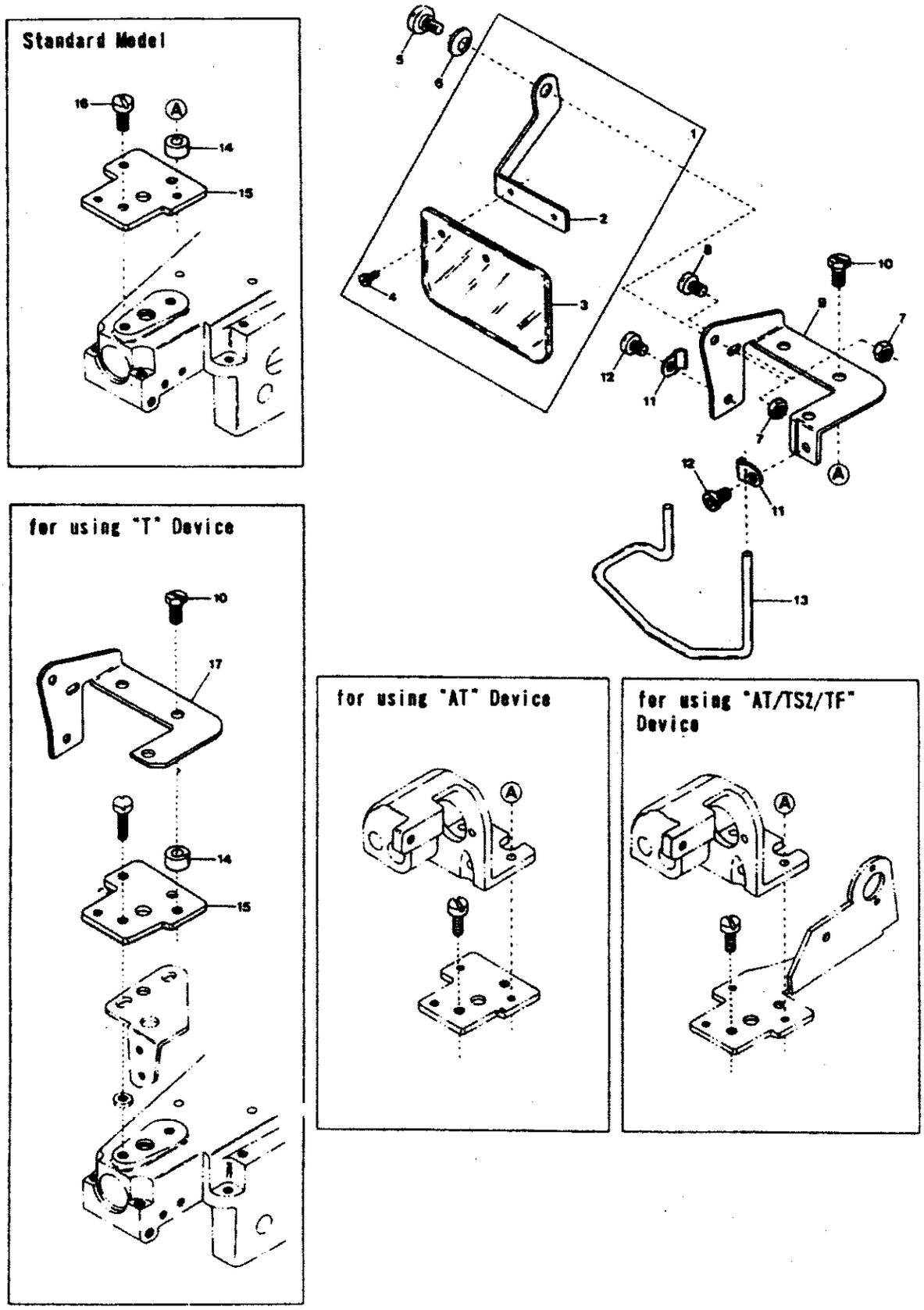

NEEDLE DRIVING MECHANISM

4

Ref. No.	Parts No.	Description	品 名	Amt. Req.
1	0080145	Pulley	皮带轮	1
2	003595	Screw(15/64-28×17.5)	螺丝	2
3	0080123	Collar(12.71×21×8mm)	挡圈	1
4	003554	Screw(7/32-32×4.8)	螺丝	4
5	0080202	Main Shaft	主轴	1
6	0080701	Tension Release Eccentric	线张力松紧偏心销	1
7	0080209	Needle Driving Eccentric, C. Set	针杆偏心组件	1
8	0080211	Needle Driving Eccentric	针杆偏心轮	1
9	003551	Screw(7/32-32×11)	螺丝	1
10	0080210	Needle Driving Connecting Rod	偏心连杆	1
11	004392	Screw(5/32-40×13.5)	螺丝	2
12	004391	Screw(5/32-40×11.2)	螺丝	2
13	0080216	Oil Retainer(with hole)	盛油器（带孔）	2
14	0080215	Oil Retainer(without hole)	盛油器（无孔）	1
15	310082 ◆	Oil Wick(Woolen Yarn)(ℓ=10mm)	吸油绳（棉制纱线）	3
16	0080217	Ball Eccentric	偏心销	1
17	0080208	Needle Driving Shaft Lever, C. Set	针杆运动组件	1
18	300034	Space Ring	塑胶挡圈	1
19	004554	Screw(7/32-32×15.9)	螺丝	1
20	0080218	Needle Driving Shaft Lever	针杆曲柄	1
21	005557	Screw(7/32-32×12.7)	螺丝	1
22	005553	Screw(7/32-32×12)	螺丝	1
23	0080219	Needle Driving Shaft	针杆	1
24	0080222	Collar(11.1×20×6.4mm)	挡圈	1
25	003471	Screw(3/16-32×4.8)	螺丝	2
26	0080328	Needle Driving Lever	持针器	1
27	005549	Screw(3/16-32×15.8)	螺丝	1
28	0080224	Needle Stop Pin	针限位销	1
29	————	Needle(System: LW× 6T)	针（LW*6T）	1
30	4019100	Needle Clamp	夹针板	1
31	004397	Screw(5/32-40×7.1)	螺丝	1
32	0080392	Needle Thread Pull-off Eyelet	线张力调节器	1
33	004358	Screw(9/64-40×5.6)	螺丝	2
34	0080391	Needle Thread Pull-off	引线装置	1
35	000322	Nut	螺母	1
36	000644	Spring Washer	弹簧垫片	1
37	006035	Screw(9/64-40×7)	螺丝	1

3

4

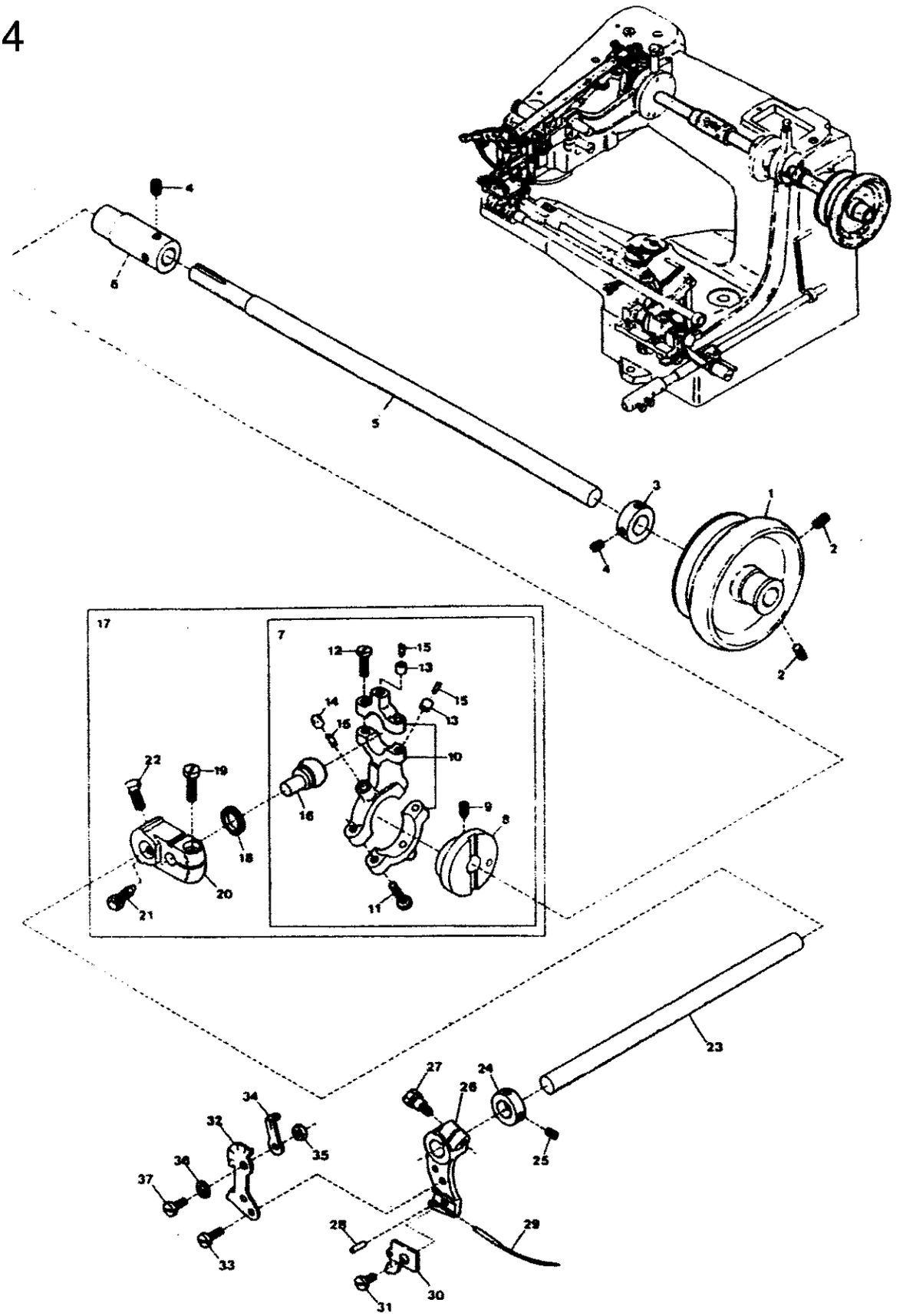

ESSER FOOT MECHANISM(1)

5

f. Parts No.	Description	品　　名	Amt. Req.	
0080325	Spring Pin	弹簧销	1	
0080309	Knee Press Shaft Spring	升降杆主轴弹簧	1	1
000724	Pin	销子	1	2
0080308	Collar(9.53×19×6.4mm)	挡圈	1	3
004397	Screw(5/32-40×7.1)	螺丝	1	
0080304	Knee Press Shaft	升降杆主轴	1	
0080310	Knee Press Shaft Lever	升降杆连接块	1	
005565	Screw(1/4-24×14.3)	螺丝	1	4
003394	Adjusting Screw(5/32-40×13.5)	调节螺丝	1	
000339	Lock Nut	固定螺母	1	
006047	Screw(3/16-32×10.7)	螺丝	2	
4012055	Presser Foot Depress Shaft Lever	压杆连接块	1	
004552	Screw(7/32-32×9.5)	螺丝	1	
4012056	Presser Foot Connecting Link	压杆连杆	1	
0080313	Presser Foot Depress Shaft	压杆主轴	1	
0080314	Collar(7.95×12.7×6.4mm)	连接环	1	1
003393	Screw(5/32-40×3.2)	螺丝	1	
0080306	Knee Press Shaft Sleeve	升降压杆主轴套筒	1	
0080303	Knee Press Joint	升降压杆连接块	1	
003670	Screw(7/32-32×6.3)	螺丝	2	2
				3
005555	Screw(7/32-32×7.9)	螺丝	2	4
0080300	Knee Press, Complete Set	升降压杆，整套	1	5
0080299*	Knee Press Cushion	升降杆垫	1	
0080301*	Knee Press	压板	1	
200023*	[005662]Screw(1/4-20×12.7)[1/4-20×12.7]	螺丝	1	
0080302*	Knee Press Shank	压杆	1	

6

5

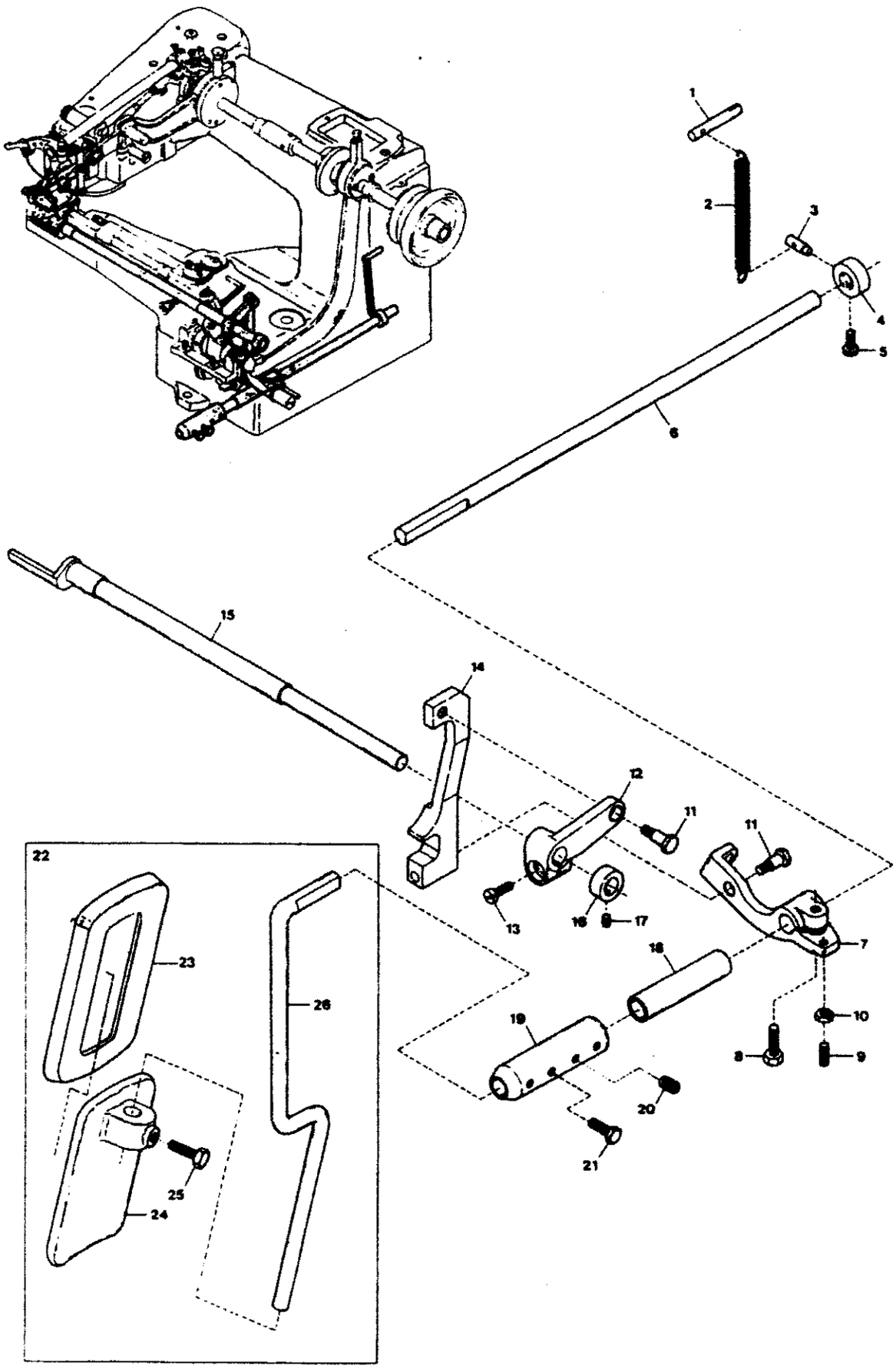

PRESSER FOOT MECHANISM(2)

Ref. No.	Parts No.	Description	品 名	Amt. Req.
1	4017004	Presser Foot Plate, Complete Set	针板组件	1
2	4017006	Presser Foot Plate	针板	1
3	4017007	Chaining Finger	链指针	1
4	004246	Screw(11/128-56×2.4)	螺丝	1
5	0080358	Needle Guard	挡针板	1
6	004393	Screw(5/32-40×1.9)	螺丝	1
7	4017016	Cloth Guide	导布板	1
8	000535	Washer	垫片	1
9	004401	Screw(9/64-40×3.2)	螺丝	1
10	4017010	Cloth Retainer	压布板	1
11	004245	Screw(11/128-56×3.2)	螺丝	1
12	4017011	Cloth Retainer Adjusting Pin	压布板调节销	1
13	003393	Screw(5/32-40×3.2)	螺丝	1
14	4017012	Cloth Retainer Adjusting Plata Holder	压布板调节支架	1
15	004281	Screw(29/256-48×4.8)	螺丝	2
16	0080386	Cloth Retainer Adjusting Plate	压布板调节板	1
17	001228	Screw(3/32-56×3.2)	螺丝	1
18	4017013	Cloth Retainer Spring	压布板弹簧	1
19	0080503	Cloth Retainer Spring Ball	压布板弹簧钢珠	1
20	4017014	Cloth Retainer Spring Lever	压布板弹簧杆	1
21	4017015	Cloth Retainer Spring Lever Sleeve	压布板弹簧杆套筒	1
22	000600	Spring Washer	弹簧垫片	1
23	000531	Washer	垫片	1
24	110032	Screw(M3-0.5×6.5)	螺丝	1
25	004642	Screw(1/4-24×12)	螺丝	1
26	0080381	Presser Foot Plate Support	针板支架	2
27	007420	Adjusting Screw(5/32-40×9.2)	调节螺丝	2
28	004398	Screw(5/32-40×9.5)	螺丝	2
29	004317	Screw(1/8-44×4.8)	螺丝	2
30	0080316	Presser Foot Lever Holder	压脚托架	1
31	004481	Screw(3/16-32×11.5)	螺丝	1
32	4017000	Presser Foot(left), Complete Set	压脚（左），整套	1
33	4017001	Presser Foot(left)	压脚（左）	1
34	006339	Screw(5/32-40×9.9)	螺丝	2
35	000339	Nut	螺母	2
36	0080321	Presser Foot Lever(Left)	压脚支架（左）	1
37	006051	Screw(7/32-32×20.7)	螺丝	2
38	4017002	Presser Foot(Right), Complete Set	压脚（右），整套	1
39	4017003	Presser Foot(Right)	压脚（右）	1
40	0080346	Presser Foot Lever(Right)	压脚支架（右）	1
41	0080348	Presser Foot Spring	压脚拉簧	2
42	006638	Screw(5/32-40×9.5)	螺丝	2
43	000239	Adjusting Nut	调节螺母	2

6

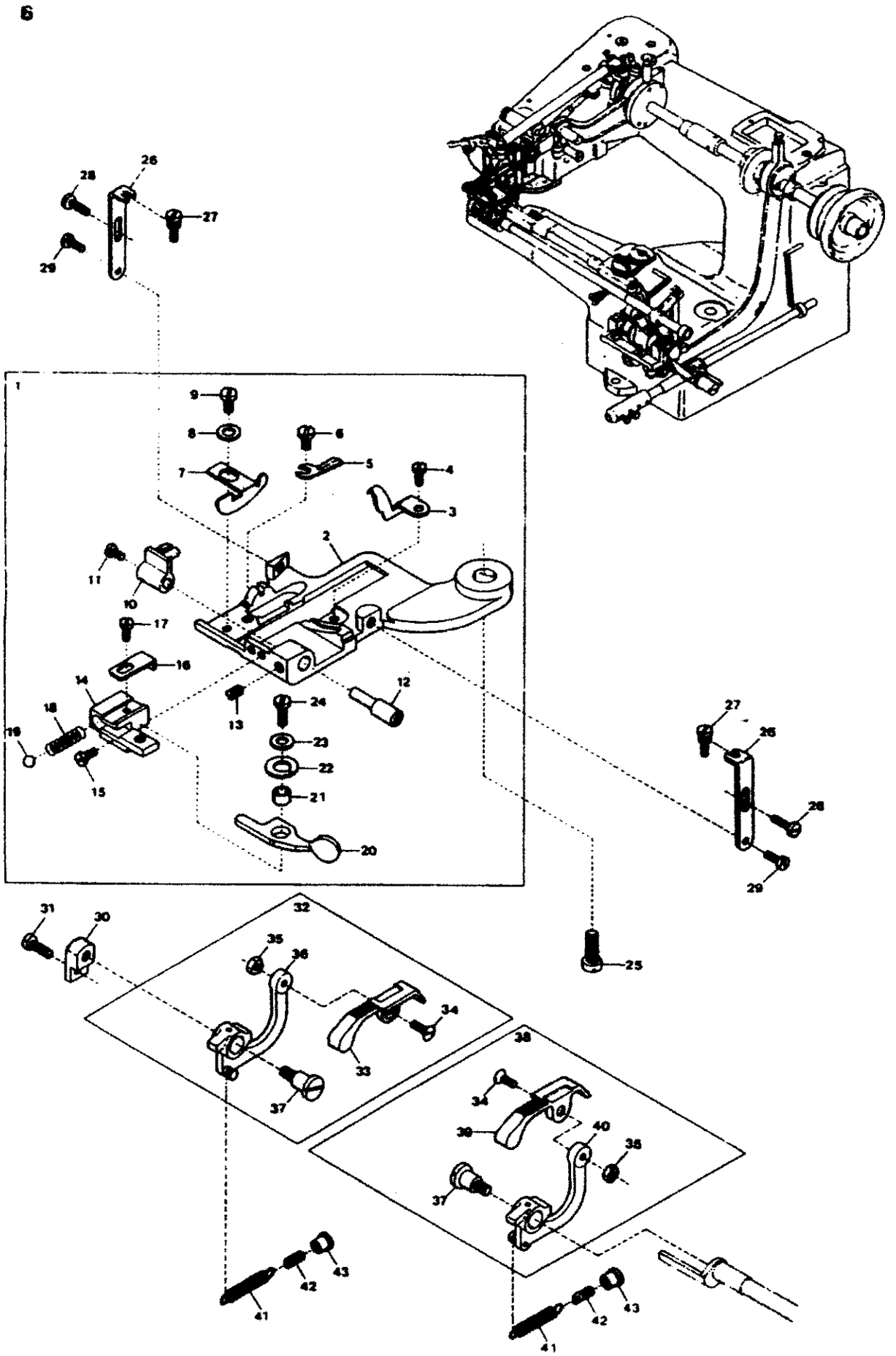

RIDGE FORMING MECHANISM(1)

Ref. No.	Parts No.	Description	品　　名	Amt. Req.
1	0080601	Ridge Forming Plate Eccentric	主轴偏心	1
2	003559	Screw(7/32-32×7.5)	螺丝	1
3	003555	Screw(7/32-32×6.4)	螺丝	3
4	0080602	Skipstitch Eccentric	跳缝偏心环	1
5	0080624	Skipstitch Eccentric Pin	跳缝偏心环销	1
6	0080623	Main Shaft Gear Sypport	主轴齿轮支架	1
7	0080646	Main Shaft Gear(Large)	主轴齿轮（大）	1
8	004281	Screw(29/256-48×4.8)	螺丝	2
9	0080645	Main Shaft Gear(Small)	主轴齿轮（小）	1
10	008047	Screw(7/32-32×3.6)	螺丝	3
11	0080647	Reduction Gear	减速齿轮	1
12	0080636	Reduction Gear Eccentric Bushing	减速齿轮偏心套筒	1
13	003641	Screw(1/4-24 11.1)	螺丝	1
14	0080635	Collar(9.53×14.3×7.2mm)	挡圈	1
15	003393	Screw(5/32-40× 3.2)	螺丝	1
16	0080619	Oil Cap	油盖	1
17	310083 ◆	Oil Wick(Woolen Yarn)(ℓ=250mm)	吸油绳（棉制纱线）	1
18	0080681	Oil Wick	吸油绳	1
19	0080603	Ridge Forming Plate Connecting Rod	大连杆	1
20	0080605	Ridge Forming Plate Connecting Rod Pin	连杆销	1
21	0080651	Ridge Forming Basement	摆杆支架	1
22	005061	Screw(1/4-24×16.7)	螺丝	3
23	0080656	Ridge Forming Plate Oscillating Shaft	摆杆轴	1
24	0080657	Ridfe Forming Plate Oscillating Eccentric	摆杆偏心套筒	1
25	003558	Screw(7/32-32×9.5)	螺丝	2
26	0080606	Ridge Forming Plate Oscillating Lever	摆杆	1
27	0080655	Ridge Forming Plate Gear(Small)	齿轮	1
28	003554	Screw(7/32-32×4.8)	螺丝	2
29	0080005	Ridge Forming Plate Gear(Large)	齿轮（大）	1
30	0080652	Ridge Forming Plate Gear Roller	齿轮滚筒	1
31	006031	Screw(5/32-32×10.8)	螺丝	1
32	0080658	Collar	挡圈	1
33	003556	Screw(7/32-32× 10.3)	螺丝	2
34	0080659	Gear Spring Connecting Link	齿轮弹簧连杆	1
35	006048	Screw(3/16-32×4.4)	螺丝	1
36	0080309	Gear Spring	齿轮弹簧	1
37	0080325	Gear Spring Pin	齿轮弹簧销	1
38	0080662	Collar(9.58× 15.9×9.5mm)	挡圈	1
39	0080663	Oscillating Shaft Locking Latch	摆动轴闩	1
40	0080664	Locking Latch Spring	轴闩弹簧	1
41	0080661	Locking Latch Pin	轴闩销	1
42	003473	Screw(3/16-32×7.9)	螺丝	1
43	0080665	Locking Latch Spring Pin	轴闩弹簧销	1

7

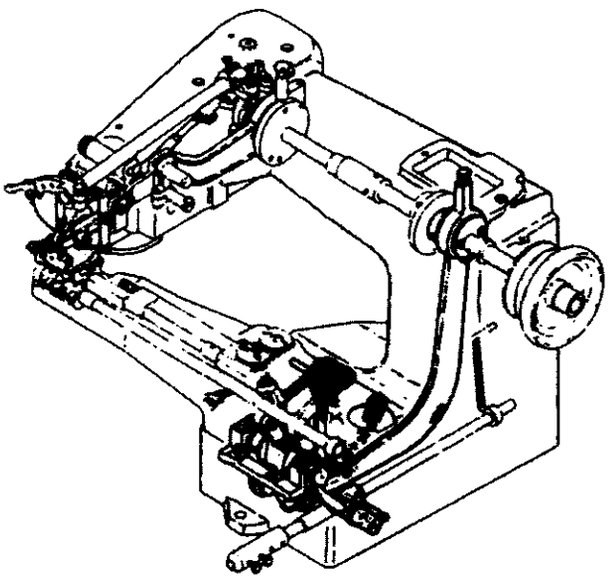

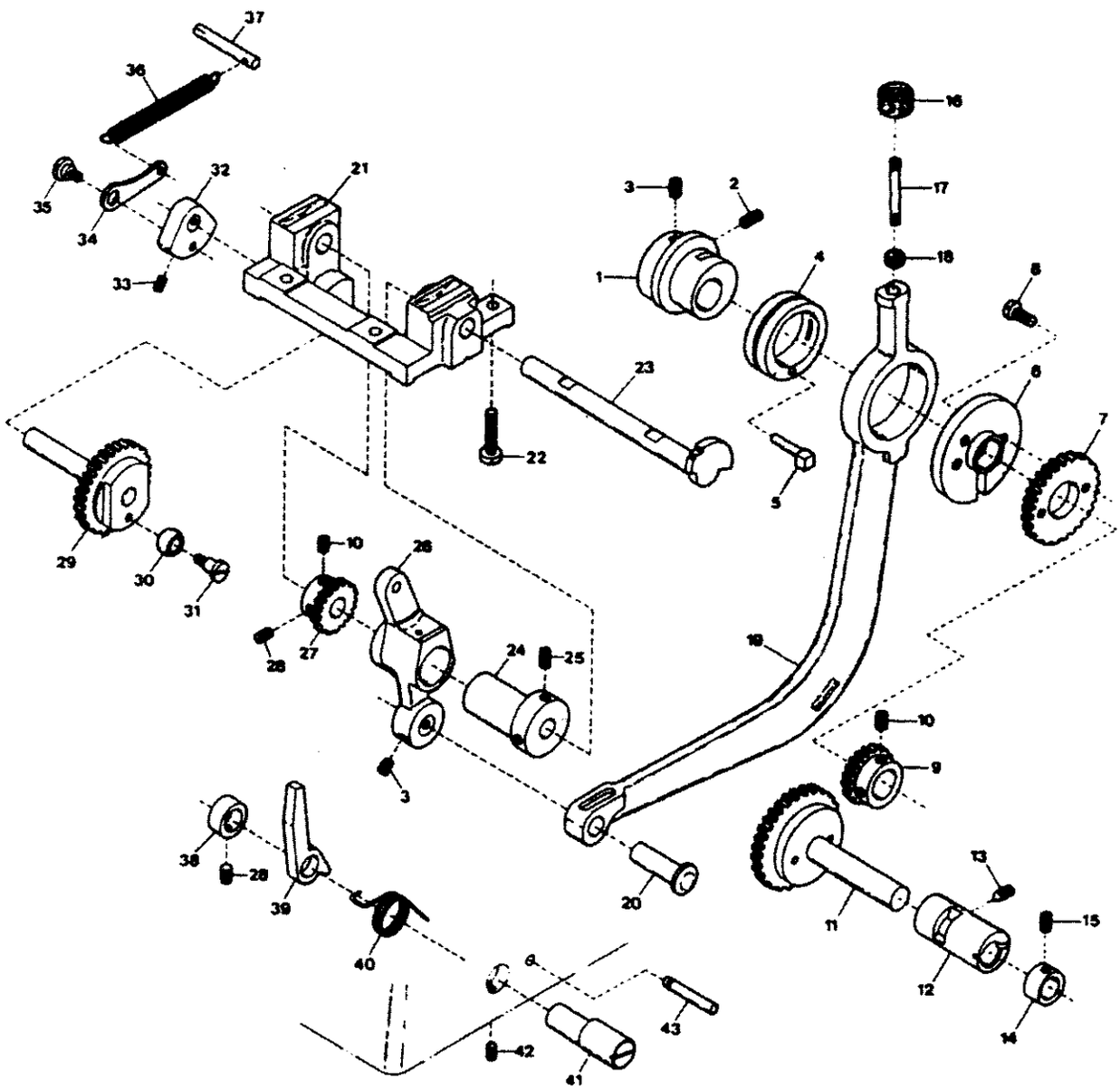

RIDGE FORMING MECHANISM(2)

Ref. No.	Parts No.	Description	品　　名	Amt. Req.
1	4010038	Ridge Form Regulator Graduation Plate	起菱盘调节刻度板	1
2	230007	Screw(29/256-48×5)	螺丝	3
3	006520	Screw(7/32-32×6)	螺丝	1
4	0080690	Ridge Forming Regulator, C. Set	起菱盘调节器	1
5-1	0080693	Ridge Forming Regulator(1:0.5)	起菱盘调节器	1
5-2	0080709	〃 〃 (1:1)(Extra)	起菱盘调节器	1
6	0080673	Ridge Forming Regulator Handle	起菱盘调节器旋钮	1
7	006222	Screw(11/128-56×4)	螺丝	2
8	000010	Conical Spring Washer	锥形弹簧垫片	1
9	0080692	Ridge Forming Regulator Flange	起菱盘调节器支架	1
10	007616	Screw(1/8-44×4.2)	螺丝	2
11	005431	Screw(1/8-44×4.4)	螺丝	2
12	000675	Stop Washer	止动垫片	2
13-1	0080694	Regulator Gear(Large)(1:0.5)	调节齿轮	1
13-2	0080708	〃 〃 (1:1)(Extra)	调节齿轮	1
14	003553	Locking Screw(7/32-32×6.4)	固定螺丝	1
15	006900	Guide Screw(3/8-32×8.5)	螺丝	1
16	006855	Adjusting Screw(7/32-32×8.7)	调节螺丝	1
17	006242	Connecting Pin(with screwed head)	连接销	1
18	000347	Nut(3/16-32)	螺母	1
19	0080618	Ridge Forming Plate Connecting Link	起菱盘连杆	1
20	004390	Screw(5/32-40×12.7)	螺丝	2
21	0080609	Ball Stud	螺栓	1
22	000553	Washer	垫片	1
23	000355	Nut(7/32-32)	螺母	1
24	0080610	Ridge Forming Plata Shaft Lever	起菱盘轴连接块	1
25	005047	Screw(3/16-32×9.5)	螺丝	1
26	0080612	Ridge Forming Plate Cradle	起菱盘调节柄	1
27	0080613	Pivot Bearing	锥形销	1
28	003561	Screw(7/32-32×12.7)	螺丝	1
29	006892	Pivot Bearing Screw(3/8-24×21)	锥形螺丝	1
30	003559	Screw(7/32-32×7.5)	螺丝	1
31	000338	Nut	螺母	1
32	006639	Screw(5/32-40×15.1)	螺丝	1
33	0080614	Cradle Spring(Right)	支架弹簧	1
34	006651	Adjusting Screw(7/32-32×13.5)	调节螺丝	1
35	000255	Adjusting Nut	调节螺母	1
36	000334	Nut	螺母	1
37	005607	Screw(11/64-40×25	螺丝	1
38	4010041[0080348]	Cradle Spring(Left)	支架弹簧	1
39	006638	Adjusting Screw(5/32-40×9.5)	调节螺丝	1
40	000239	Adjusting Nut	调节螺母	1
41	0080615	Collar(7.94×12.7×14.3mm)	挡圈	1
42	003393	Screw(5/32-40×3.2)	螺丝	1
43	4010003	Ridge Forming Plate Shaft	起菱盘轴	1
44	4010002	Ridge Forming Plate(100°)	起菱盘	1
45	003638	Screw(11/64-40×4)	螺丝	2

8

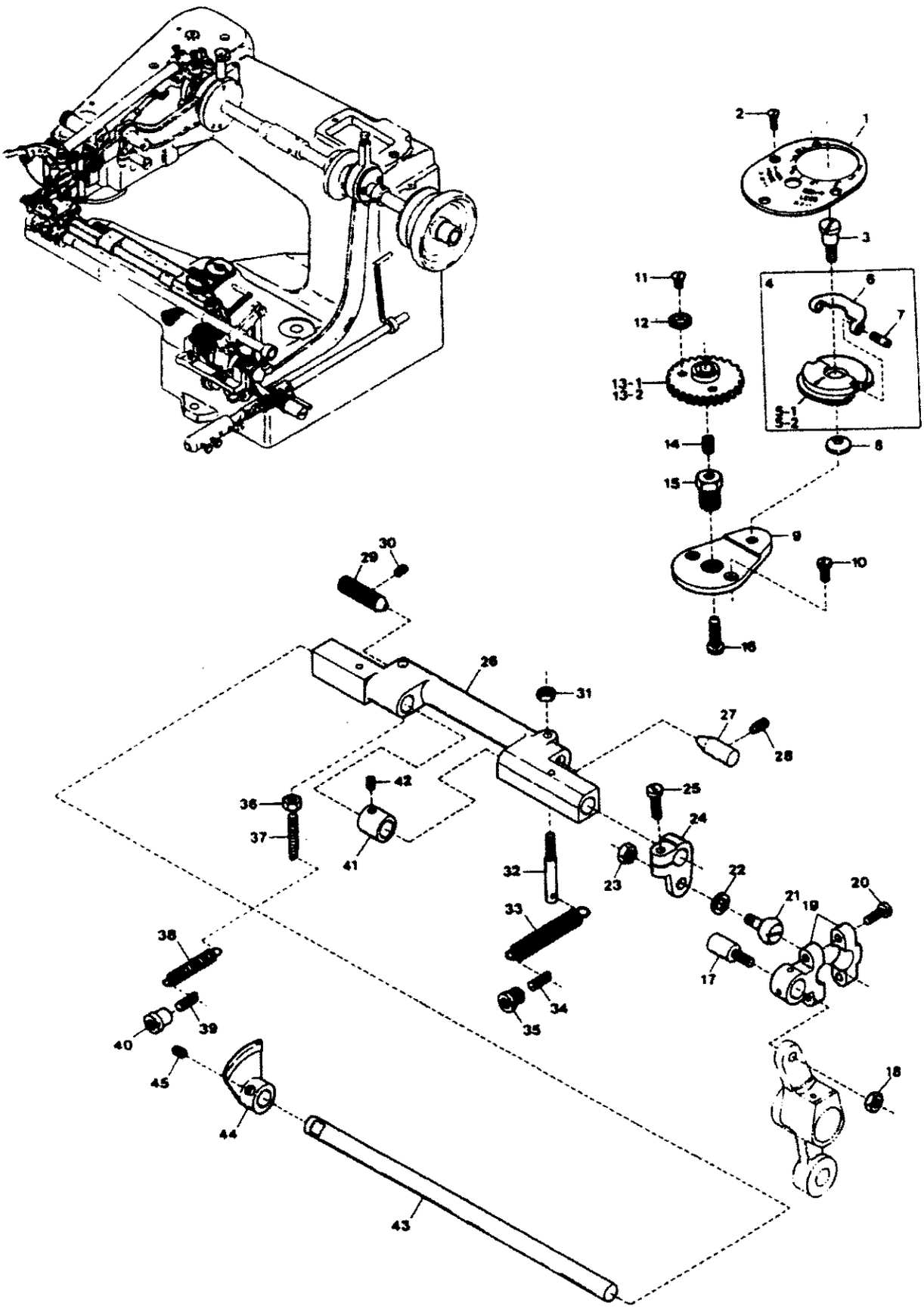

LOOPER DRIVING MECHANISM

9

Ref. No.	Parts No.	Description	品　　名	Amt. Req.
1	0080403	Looper Driving Crank Pin	打环器曲柄和销	1
2	0080414	Oil Wick	吸油绳	1
3	0080215	Oil Retainer(without hole)	护油器（带孔）	1
4	0080400	Looper Driving Crank, Complete Set	打环器曲柄，整套	1
5	0080401	Looper Driving Crank	打环器曲柄	1
6	003560	Screw(7/32-32×17.5)	螺丝	2
7	0080402	Looper Driving Crank Bushing	打环器曲柄套筒	1
8	0080404	Looper Yoke Connecting Bracket	打环器连接支架	1
9	004280	Screw(4.83-32×12.7)	螺丝	1
10	0080405	Looper Yoke Pin	打环器销	1
11	003471	Screw(3/16-32×4.8)	螺丝	1
12	0080406	Looper Yoke	打环器	1
13	004399	Screw(5/32-40×9.5)	螺丝	1
14	000354	Lock Nut(7/32-40)	固定螺母	1
15	0080415	Looper Carrier Ball Joint	打环器球头连接接头	1
16	004312	Screw(1/8-44×7.9)	螺丝	3
17	004554	Screw(7/32-32×15.9)	螺丝	1
18	0080408	Looper Carrier Ball	打环器球头	1
19	003392	Screw(5/32-40×5.2)	螺丝	1
20	0080407	Looper Carrier	打环器针	1
21	0080413	Looper	挑线叉	1
22	4010007	Adjusting Eccentric Pin	调节偏心销	1
23	4010040	Looper Ball Joint Adjusting Eccentric	打环器接头调节偏心销	1
24	000600[001123]	Spring Washer	弹簧垫片	1
25	006826[001156]	Screw(11/64-40×12)[11/64-40×13.3]	螺丝	1
26	340004	Stop Pin	止动销	2
27	4010039	Adjusting Eccentric Bushing	调节偏心套筒	1
28	005558	Screw(7/32-32×15.8)	螺丝	1
29	0060077	Collar(12×17.5×6mm)	连接环	1
30	001892	Screw(1/8-44×2.9)	螺丝	2
31	4010019	Looper Yoke, Complete Set	打环器，整套	1

9

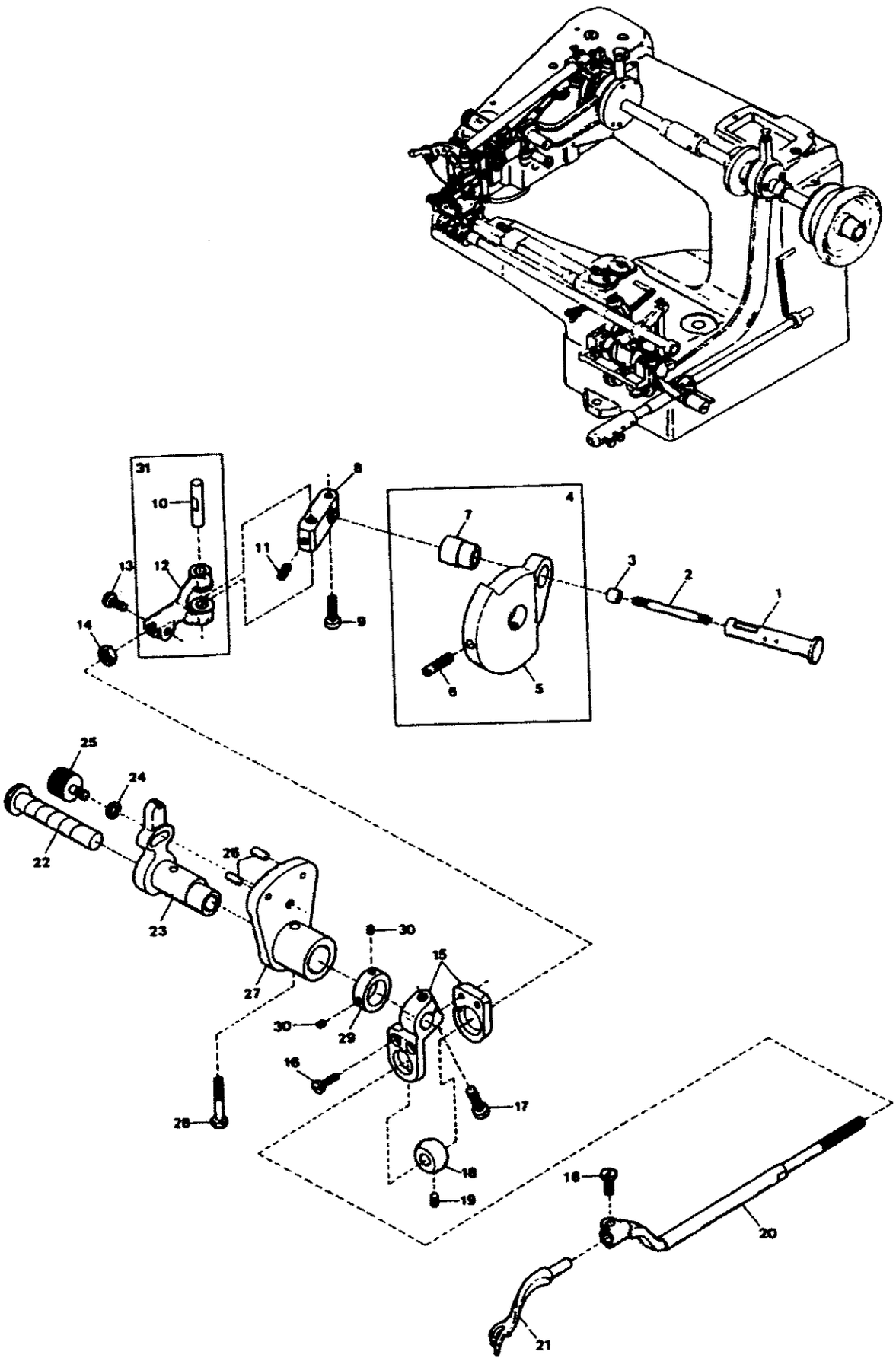

FEED DRIVING MECHANISM

10

Ref. No.	Parts No.	Description	品　　名	Amt. Req.
1	0080520	Feed Regulating Pushbutton, C. Set	针距调节按钮(组件)	1
2	0080521	Feed Regulating Pushbutton	针距调节组	1
3	0080523	Pushbutton Spring	按钮弹簧	1
4	0080524	Pushbutton Spring Sleave	按钮弹簧套筒	1
5	0080522	Pushbutton Shaft	按钮弹簧主轴	1
6	003391	Serew(5/32-40×4.8)	螺丝	1
7	0080294	Main Shaft Balance Weight	平衡块	1
8	003557	Screw(7/32-32×6.7)	螺丝	1
9	003555	Screw(7/32-32×6.4)	螺丝	1
10	0080001	Feed Regulator, Complete Set	针距调节，整套	1
11	0080501	Feed Regulator	针距调节器	1
12	0080502	Feed Regulating Eccentric	针距调节偏心环	1
13	004250	Stop Screw(3/32-56×3.6)	固定螺丝	3
14	0080504	Feed Regulating Ball Spring	针距调节弹簧	1
15	0080503	Feed Regulating Ball	针距调节弹丸	1
16	0080296	Feed Lever	送料杆	1
17	310083◆	Oil Wick(Woolen Yarn)(ℓ=250mm)	吸油绳（棉制纱线）	2
18	0080215	Oil Retainer(without hole)	存油器	2
19	0080506	Feed Link	送料杆曲板	1
20	0080507	Feed Link Pin	送料杆曲柄销	1
21	280001	Screw(3/16-32×23.8)	螺丝	1
22	0080508	Feed Link Eccentric Pin	送料杆偏心销	1
23	005547	Screw(3/16-32×10.3)	螺丝	1
24	0080510	Feed Dog	送料齿	1
25	000552	Washer	垫片	2
26	004471	Screw(3/16-32×9.5)	螺丝	2

10

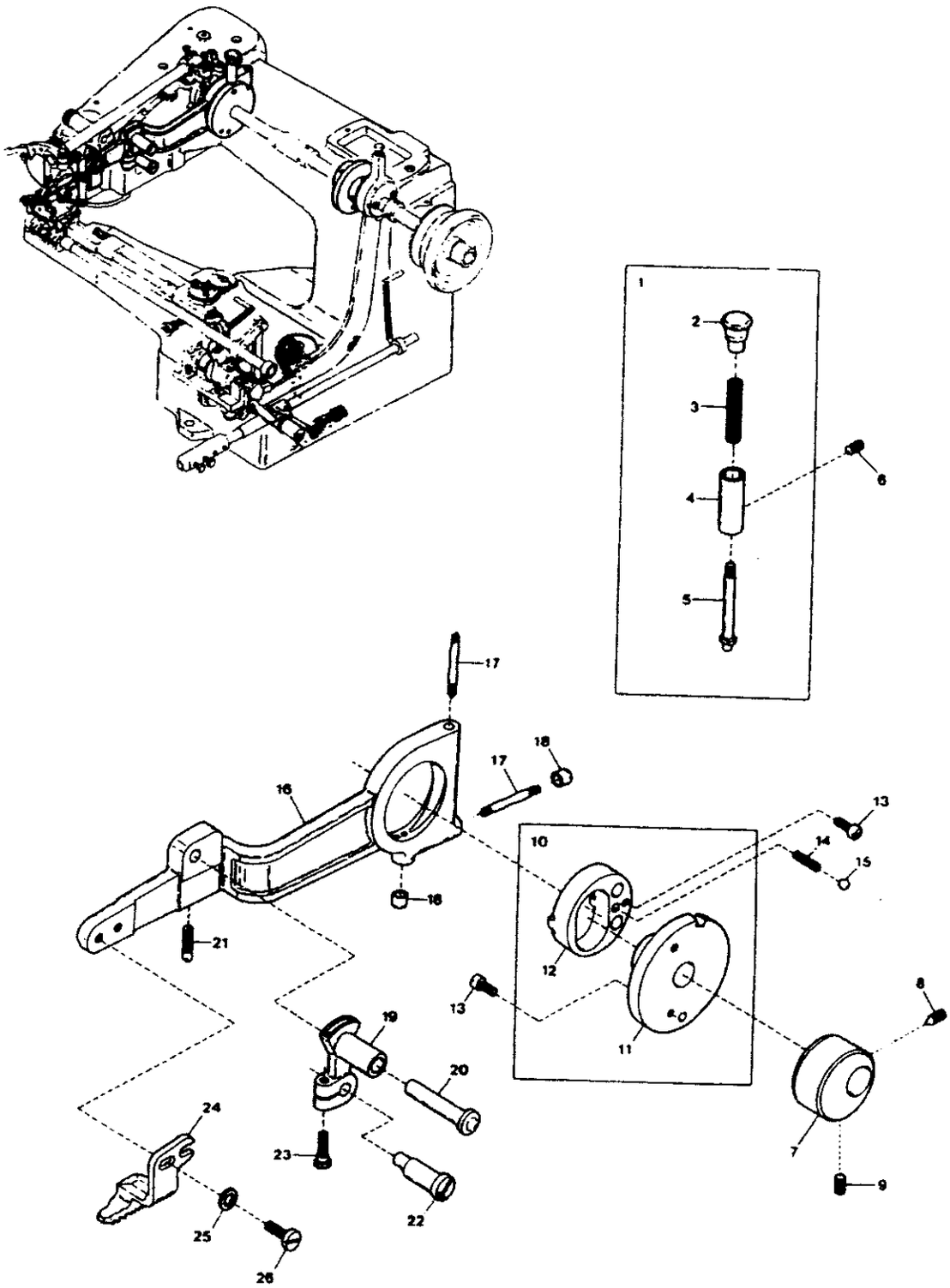

CM-364 EXCLUSIVE PARTS

Ref. No.	Parts No.	Description	品　　名	Amt. Req.
1	4011058	Machine Frame Unit	机架	1
2	4011062	Machanism Cover	差动盖	1
3	004406	Screw(11/64-40×8)	螺丝	2
4	4012082	Differential Graduation	差动刻度盘	1
5	0080432	Driving Connection Guide	驱动连接导向	1
6	004353	Screw(9/64-40×7)	螺丝	1
7	0081890	Driving Connection Bracket Guide Support	驱动连接支架	1
8	007619	Screw(9/64-40×6.3)	螺丝	1
9	0081889	Driving Connection Bracket Guide	驱动连接支架导向	1
10	000535	Washer	垫片	2
11	004358	Screw(9/64-40×5.6)	螺丝	2
12	0081752	Feed Link Eccentric Pin	送料杆偏心销	1
13	0080442	Differential Feed Regulator, C. Set	差动送料调节器，整套	1
14	0080425	Differential Feed Regulator	差动导轨座	1
15	005028	Screw(3/16-32×9.5)	螺丝	1
16	0081877	Differential Feed Regulator Slider	差动导轨套	1
17	0081758	Differential Feed Regulator Slider Cap	差动送料导轨盖	1
18	008145	Screw(1/8-40×5.6)	螺丝	1
19	0080426	Differential Feed Dog Driving Lever	差动后送臂	1
20	005510	Screw(11/64-40×4)	螺丝	3
21	0080427	Differential Feed Dog Driving Connection	差动前送臂	1
22	0080430	Driving Connection Bracket	左牙架座	1
23	0080431	Main Feed Dog	主送料齿	1
24	0080428	Differential Feed Dog Holder	右牙架座	1
25	003638	Screw(11/64-40×4)	螺丝	5
26	0080454	Differential Feed Dog	差动送料齿	1
27	001175	Screw(9/64-40×8)	螺丝	1
28	005512	Screw(11/64-40×3)	螺丝	1
29	0080424	Differential Control Inner Lever	差动控制连接电	1
30	0080421	Differential Control Lever	差动控制连杆	1
31	0080444	Differential Graduation Pointer	差动刻度表指示板	1
32	004317	Screw(1/8-44×4.8)	螺丝	1
33	000688	Stop Pin	固定销	2
34	0080423	Differential Feed Control Lever Stop	差动限位挡圈	2
35	0080422	Differential Feed Control Lever Shaft	差动控制连杆销	1
36	000366	Nut	螺母	1
37	0080435	Control Lever Fixing Piece	控制杆固定器	1
38	0080439	Fixing Screw Sleeve	固定螺丝套筒	1
39	0080438	Fixing Screw	差动扳手	1
40	004481	Screw(3/16-32×11.5)	螺丝	2

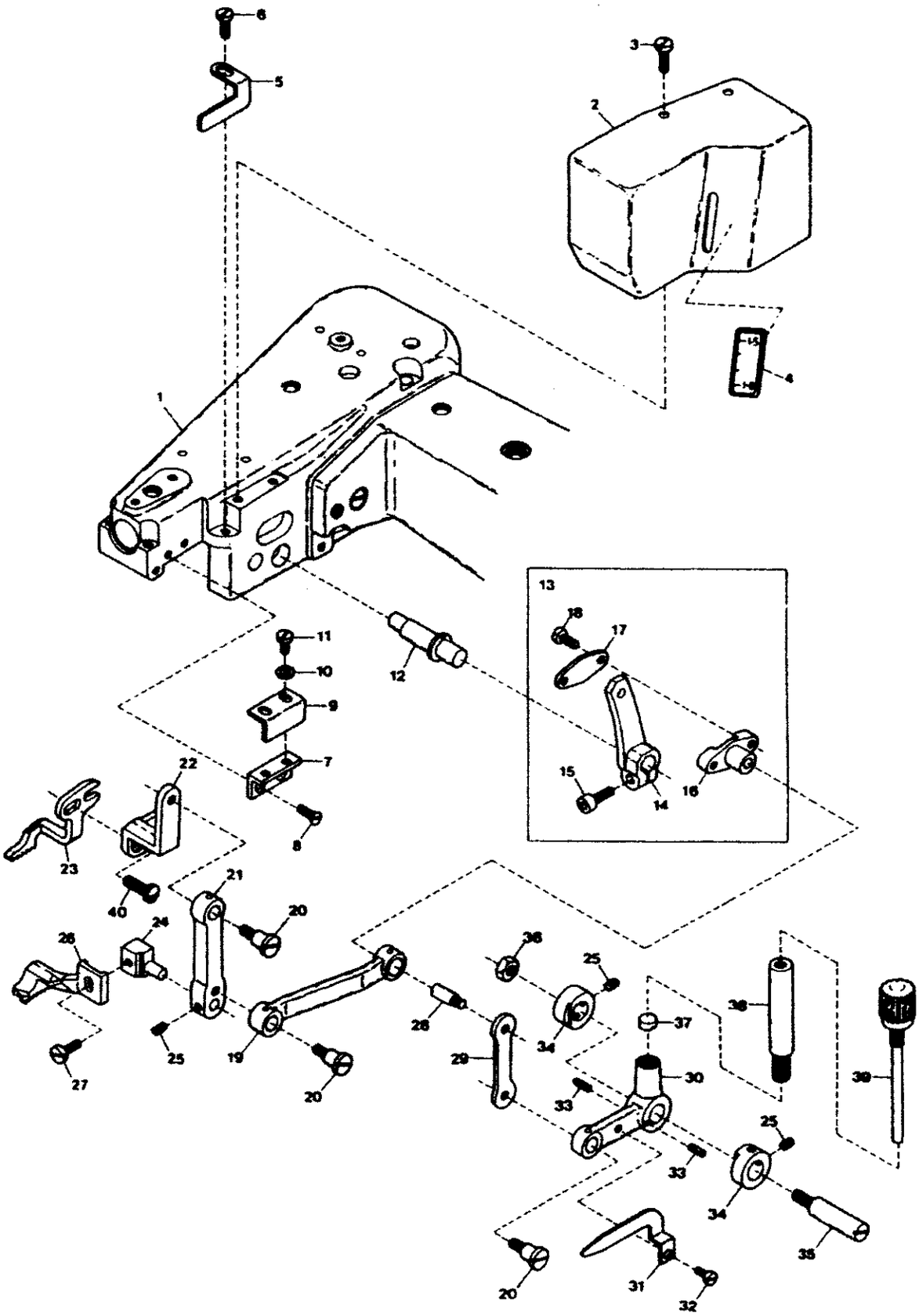

▸EXTRA PARTS

ef. No.	Parts No.	Description	品　　名	Amt. Req.
1	4010020	Thread Pull-off Device.C.Set	拉线装置，C套	1
2	4010021	Thread Eyelet Support	线孔支架	1
3	004437	Screw(11/64-40×10)	螺丝	2
4	4010023	Thread Guide Support	导线支架	1
5	007006	Screw(9/64-40×4)	螺丝	1
6	4010024	Thread Guide Holder	导线器握手	1
7	001203	Screw(9/64-40×4.5)	螺丝	2
8	4010025	Thread Guide	导线器	1
9	001331	Screw(9/64-40×3.8)	螺丝	1
0	000538	Washer	垫片	1
1	4010026	Cover Latch Spring	盖闩弹簧	1
2	000532	Washer	垫片	3
3	0090816	Needle Thread Eyelet	针闲孔	2
4	004353	Screw(9/64-40×7)	螺丝	2
5	4010027	Thread Pull-off Cover	拉线盖子	1
6	006004	Screw(11/64-40×9.7)	螺丝	1
7	000010	Conical Spring Washer	锥型弹簧垫片	1
8	000334	Nut	螺母	1
9	4010028	Thread Pull-off(Left)	拉线装置（左）	1
0	005549	Screw(3/16-32×15.8)	螺丝	1
1	4010029	Spacer	隔离器	1
2	4010030	Thread Pull-off(Right)	拉线装置（右）	1
3	001202	Screw(9/64-40×6.6)	螺丝	1
4	4010050	Ridge Forming Plate(85°)	起菱盘	1

12

EXTRA PARTS

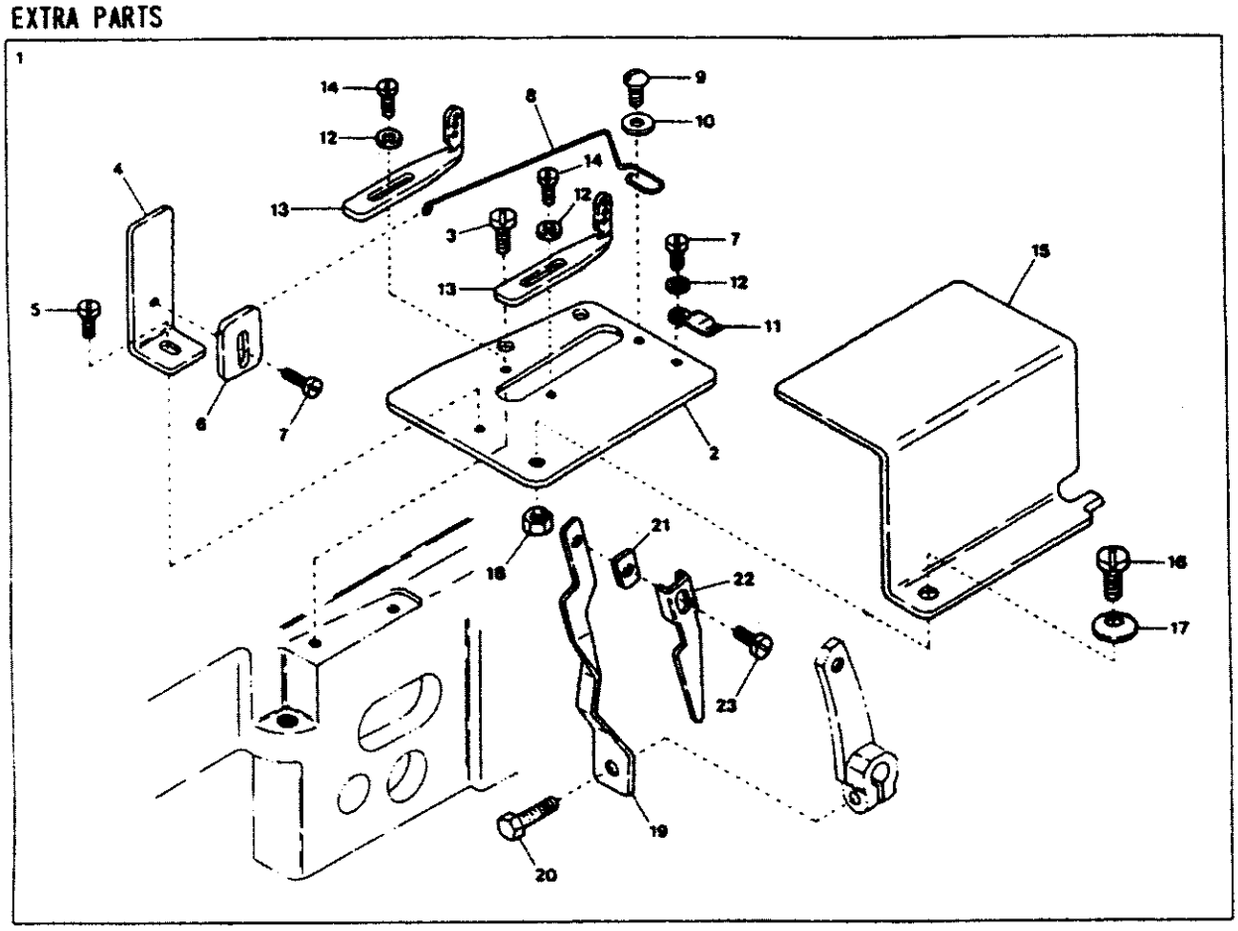

ACCESSORIES

13

Ref. No.	Parts No.	Description	品　　名	Amt. Req.
1	0099044◆	Machine Cover	机盖	1
2	9620003◆	Bag	袋子	1
3	0099091◆	Screwdriver	螺丝刀	1
4	————◆	Needle(System: LW×6T #3)	针	5
5	0099051◆	Thread Tweezers	镊子	1
6	9620403◆	Wrench(8×10mm)	扳钳	1
7	0037903◆	Screwdriver	螺丝刀	1
8	9620002◆	Oiler	加油器	1
9	0037925◆	Hexagonal Wrench(1/16 inch)	六角扳钳	1
10	0080910	Thread Stand, C. Set	线架	1
11	0080162	Thread Hanger	线吊架	1
12	005147	Screw(3/16-24×9.3)	螺丝	1
13	0080163	Spool Pin	卷轴销	1
14	9620649◆	Spool Mat	卷轴小垫	1
15	0080161	Thread Stand	线架	1
16	005148	Wood Screw(φ4.5×25)	木制螺丝	2
17	110108◆	Bolt(M6-1×75)	栓子	1
18	000570◆	Gasket(Fiber)	垫子（纤维）	3
19	000580◆	Washer	垫片	1
20	000011◆	Nut	螺母	1
21	110107	Bolt(M6-1×50)	栓子	2
22	100047	T-Nut	T字型螺母	2

13