GLOBAL

CB 3700 SERIES

Instruction manual

www.globalsew.com

info@globalsew.com

The wiring & Piping of Pneumatic Type UT Device

Please follow the picture shown below strictly.

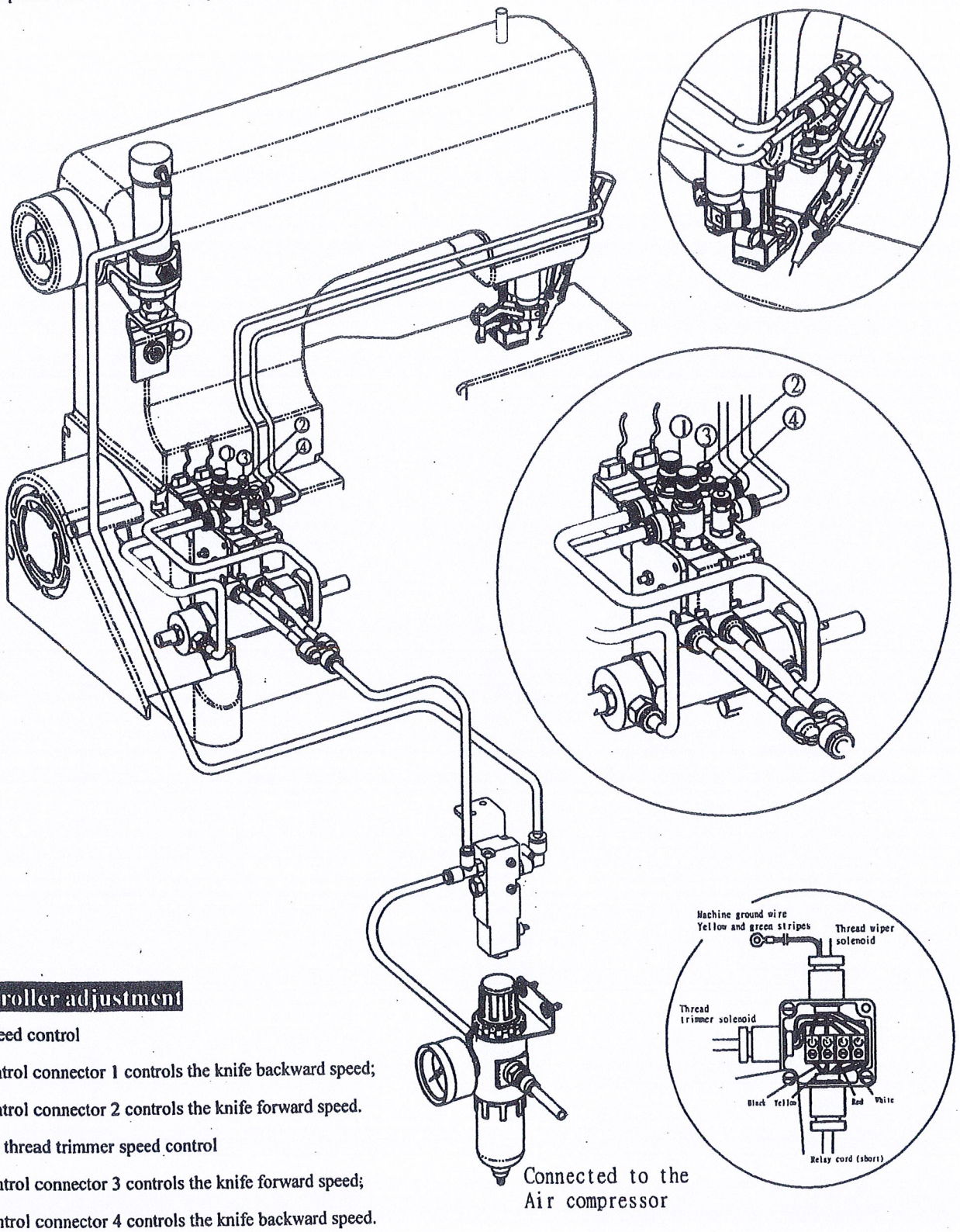

Speed controller adjustment

1. Knives speed control

   Speed-control connector 1 controls the knife backward speed;

   Speed-control connector 2 controls the knife forward speed.

2. Top cover thread trimmer speed control

   Speed-control connector 3 controls the knife forward speed;

   Speed-control connector 4 controls the knife backward speed.

3. Blower kit

   Speed-control connector 3 can be changed to joint the blower kit;

   Speed-control connector 4 will be abolished, then.

From the library of Superior Sewing Machine & Supply LLC - www.supsew.com

From the library of Superior Sewing Machine & Supply LLC - www.supsew.com

Upper knife adjustment

! Always turn off power first and then well-qualified technicians should adjust the upper knife.

Pay close attention to the knife edges not to injure your hands and/or finger.

1. Overlap and front-to-back positioning adjustments of the upper and lower knives
   This adjustment achieves the correct overlap of upper knife 1 and lower knife 2. There should be 0.5mm when the lower knife is at the farthest position to the right. To adjust the upper knife front to back, align tip A of the upper knife with the front edge of the lower knife by loosening set screw 3. When making the above adjustment, the lower knife clamp spring can be loosened, adjust the lower knife clamp spring simultaneously. (See the following.)

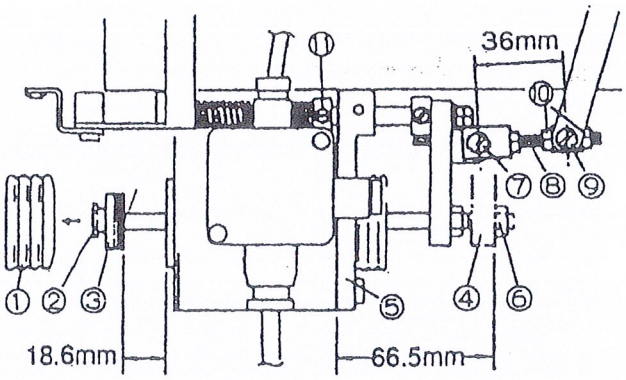

Lower knife clamp spring adjustment

! Always turn off the power first and then well-qualified technicians should adjust the lower knife clamp spring.

Pay close attention to knife edges not to injure your hands and/or finger.

1. Position lower knife clamp spring 4 2mm to the right from the tip of the upper knife as shown in the right illustration. Adjust the lower knife clamp spring front to back by loosening set screws 3. Be sure that the lower knife clamp spring is parallel with the lower knife.

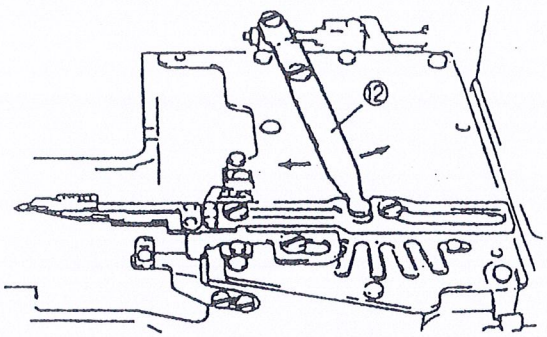

Under thread holder adjustment

! Always turn off the power first and then well-qualified technicians should adjust the under thread holder.

Pay close attention to the knife edges not to injure your hands and/or finger.

1. Position under thread holder 5 2mm to the left from the tip of the upper knife as shown in the right illustration. Adjust the under thread holder front to back by Loosening set screws 6. Be sure that looper thread holder is parallel with the lower knife.
2. Under thread holder 5 holds the under thread at the knife portion after the under threads have been cut. Adjust the looper thread holder with screw B.

◇To increase the under thread holder spring pressure, turn screw B counterclockwise.

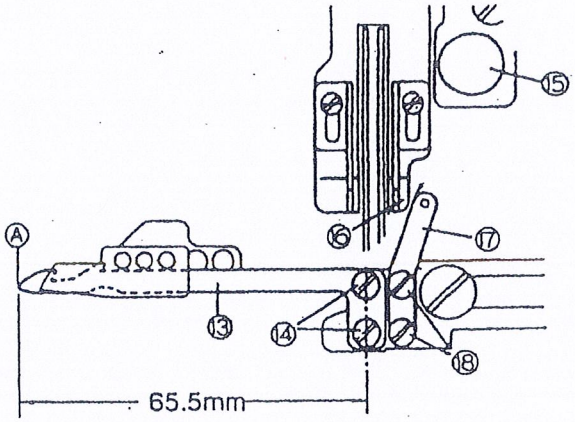

Center tip A over the looper

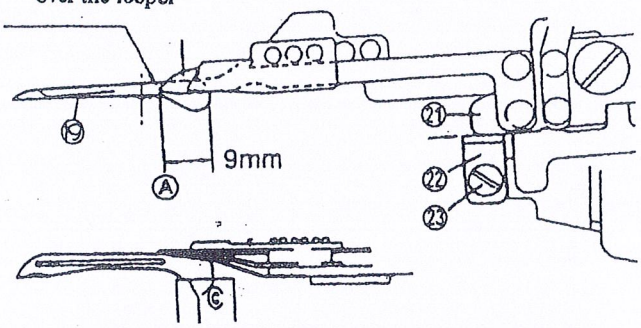

Upper knife stopper adjustment

! Always turn off the power first and then well-qualified technicians should adjust the upper knife stopper.

Pay close attention to the knife edges not to injure your hands and/or finger.

1. Position upper knife stopper 7 to provide a 7-7.5mm clearance between knife holder guide 8 and upper knife stopper 7 when knife holder guide is all the way to the right. Loosen set screw 9 to make this adjustment.

◇Increasing the clearance reduces the needle thread length.
◇Decreasing the clearance increases the needle thread length.

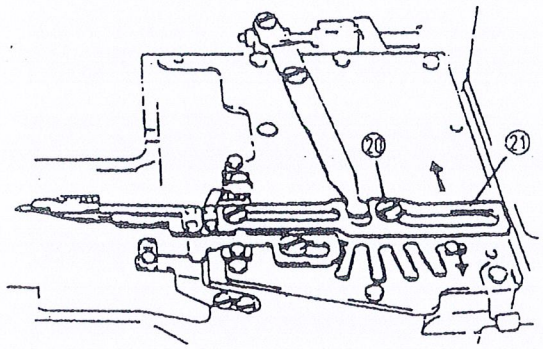

From the library of Superior Sewing Machine & Supply LLC - www.supsew.com

From the library of Superior Sewing Machine & Supply LLC - www.supsew.com

Adjusting the solenoid

! Always turn off the power first and then well-qualified technicians should adjust the solenoid.

1. The amount of solenoid movement should be set to 18.6mm. Remove rubber cover 1, loosen nut 2 and then adjust the solenoid by means stopper 3.

   ◇ When loosening nut 2, an approximately 3mm rod should be inserted into stopper 5 in order to prevent from rotating.

2. Position crank 4 so that the distance between the left end of bracket 5 and the right end of crank 4 will be 66.5mm with the solenoid activated as shown in the right illustration. Loosen nut 6 to mark this adjustment.
3. There must be a 36mm distance between the center of screw 7 and that of screw 9 in order to mount connecting rod 8. Since fine adjustment is made when adjusting the lower knife, fix the connecting rod temporarily with nut 10.
4. Loosen collar set screw 11 in order to adjust the knives.

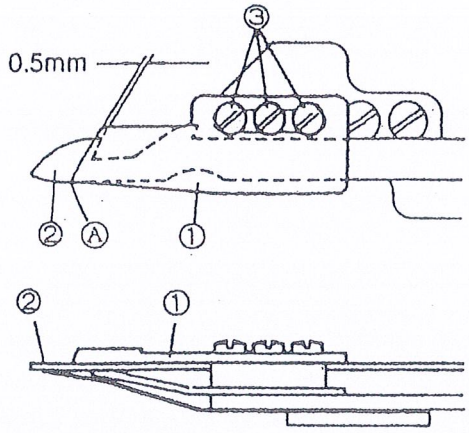

Adjusting the knives

! Always turn off the power first and then well-qualified technicians should adjust the knife.

Pay close attention to the knife edges not to injure your hands and/or finger.

◇The needle should be at the highest position of its travel to make this adjustment.

Loosening collar set screw 11 can make lever 12 drive easily by hand. Then adjust the knives.

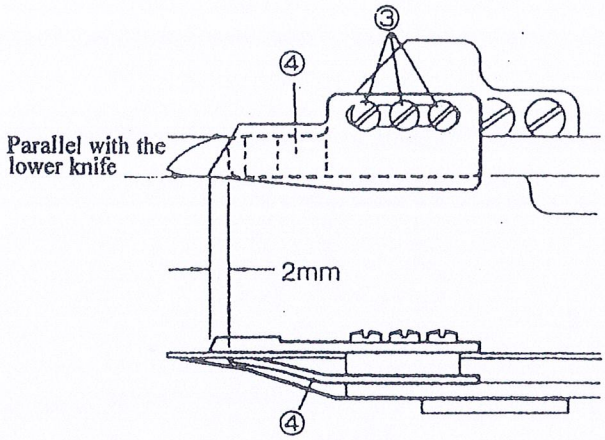

Lower knife adjustment

! Always turn off the power first and then well-qualified technicians should adjust the lower knife.

Pay close attention to the knife edges not to injure your hands and/or finger.

1. Horizontal positioning adjustment of the lower knife. The distance between the center of lower knife set screw 14 and tip A of the lower knife should be 65.5mm. To make this adjustment, loosen lower knife set screw14. ◦
2. Front-to-back positioning adjustment of the lower knife. To position lower 13 knife front to back correctly, tip A of the lower knife should be centered over the looper when tip A has moved 9mm to the left from the edge of looper 19. This adjustment can be made by loosening set screw 20 and shifting lower knife holder 21 front 21 front to back.
3. Positioning adjustment of the knife holder guide. With the lower knife tip positioned at the extreme left end, adjust knife holder guide 23 by looseing set screw 22. Be sure that knife holder guide 23 contacts the end surface lower knife holder 17 lightly.
4. Vertical positioning adjustment of the lower knife. With the lower knife tip positioned at the place described in above 2 (9mm away from the right edge of the looper), Move the lower knife up or down as required by loosening set screws 25 on bracket 24 to make this adjustment. Be sure that the bottom surface of lower knife 13 contacts the top surface of looper 19 slightly.

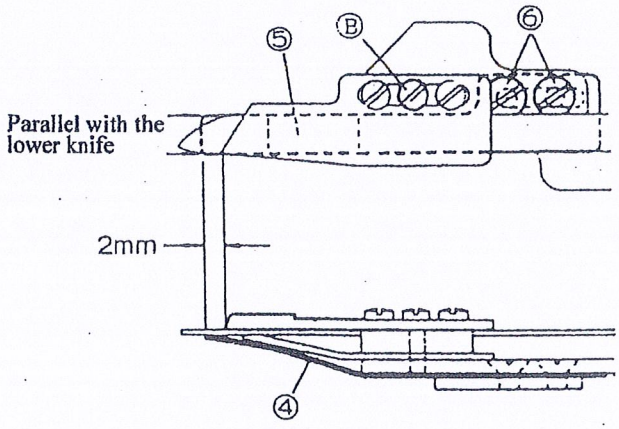

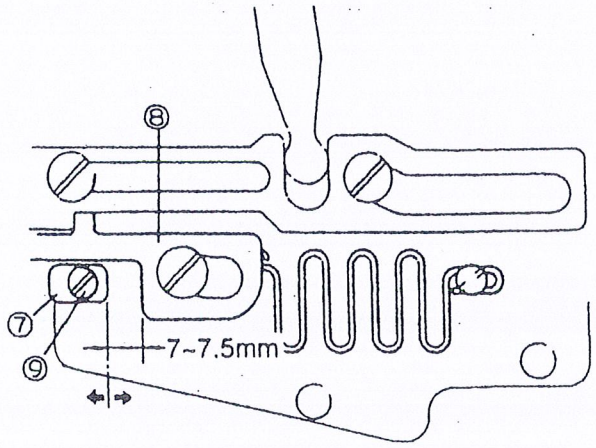

From the library of Superior Sewing Machine & Supply LLC - www.supsew.com

From the library of Superior Sewing Machine & Supply LLC - www.supsew.com

5. Adjusting the lower knife at the extreme left end of its travel With lower knife 13 at the farthest position to the left, loosen nut 26 to adjust the lower knife so that the distance between tip A of the lower knife and the center of the needle bar will be 22mm.

◇To make the above adjustment easily, check to see if the left edge of the looper's eye aligns the tip of the lower knife.

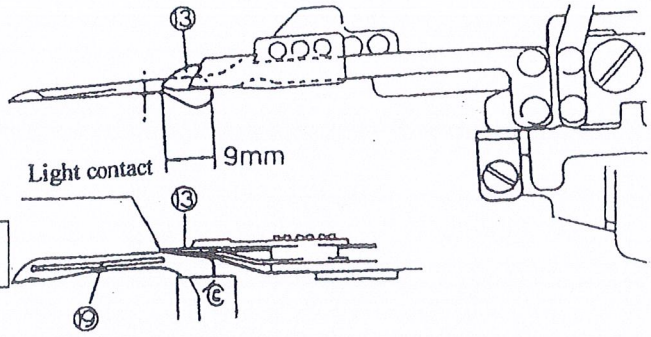

6. Confirm the following after the above adjustment has been made.

◇Dimension B should be approximately 2mm with lower knife 13 at the extreme left end of its travel.

◇The clearance between the right end of the lower knife holder and the arm bed should be approximately 1mm with lower knife 13 at the extreme right end off its travel.

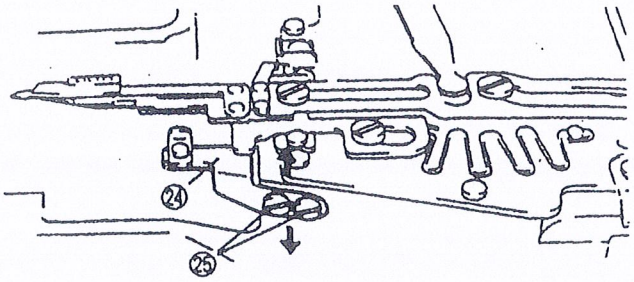

7. Loosen set screw 11 and then position collar 27 and bracket 5 when the solenoid is not activated (see below). Make sure that the clearance between the left end of bracket 5 and the right end of collar 27 is 3mm.

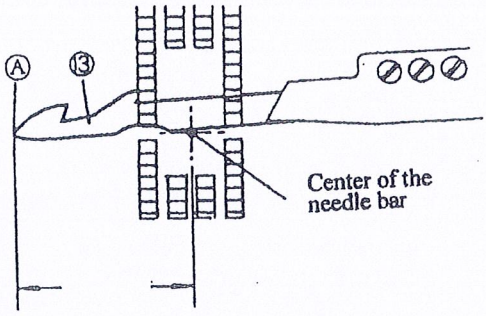

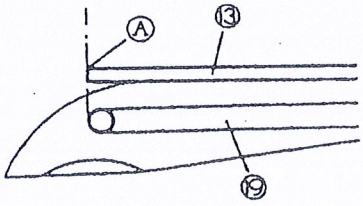

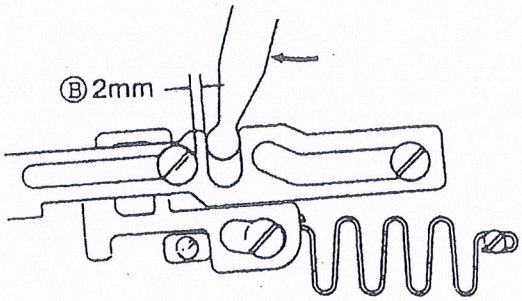

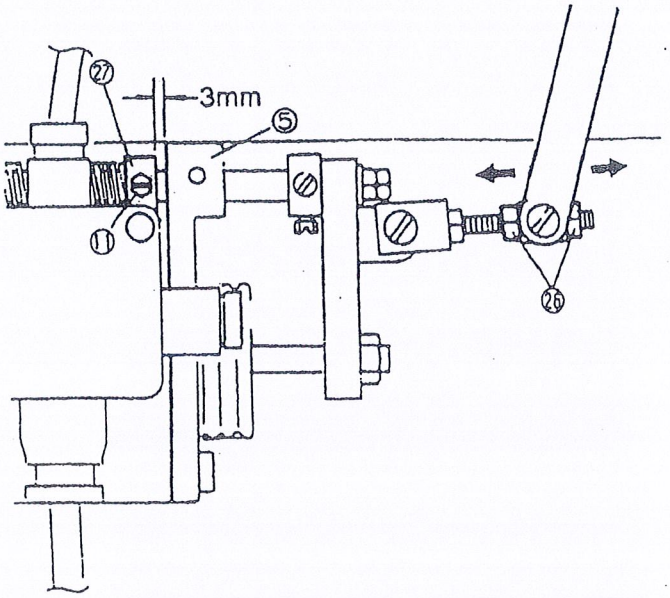

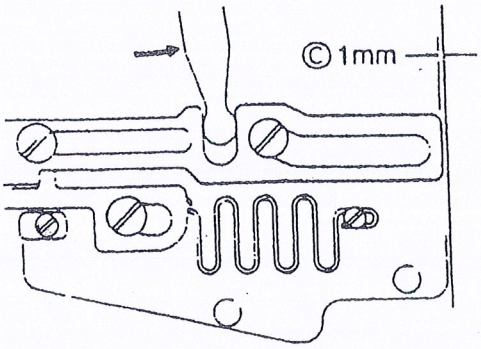

From the library of Superior Sewing Machine & Supply LLC - www.supsew.com

From the library of Superior Sewing Machine & Supply LLC - www.supsew.com

Knife holder guide clamp spring adjustment

1. Knife holder guide clamp spring (1) presses knife holder guide (2) to keep the upper knife in the position when the upper and lower knives overlap. In the standard setting, screw (3) should be centered in the set slot for spring (1) .

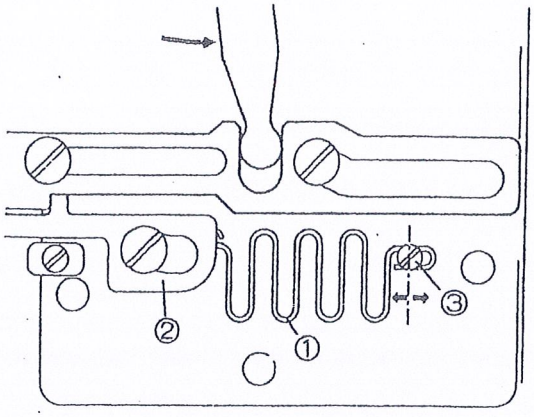

If the upper knife and lower knives are not activated properly in the standard setting, adjust the spring pressure by loosening screw (3).

If the spring pressure is too heavy, the upper and lower knives will not return home correctly.

From the library of Superior Sewing Machine & Supply LLC - www.supsew.com

From the library of Superior Sewing Machine & Supply LLC - www.supsew.com

Operation detector adjustment

! Always turn off the power first and then well-qualified technicians should adjust the operation detector.

Loosen screw 14. Be sure that the clearance between operation detector 15 and magnet 16 is 0.5mm.

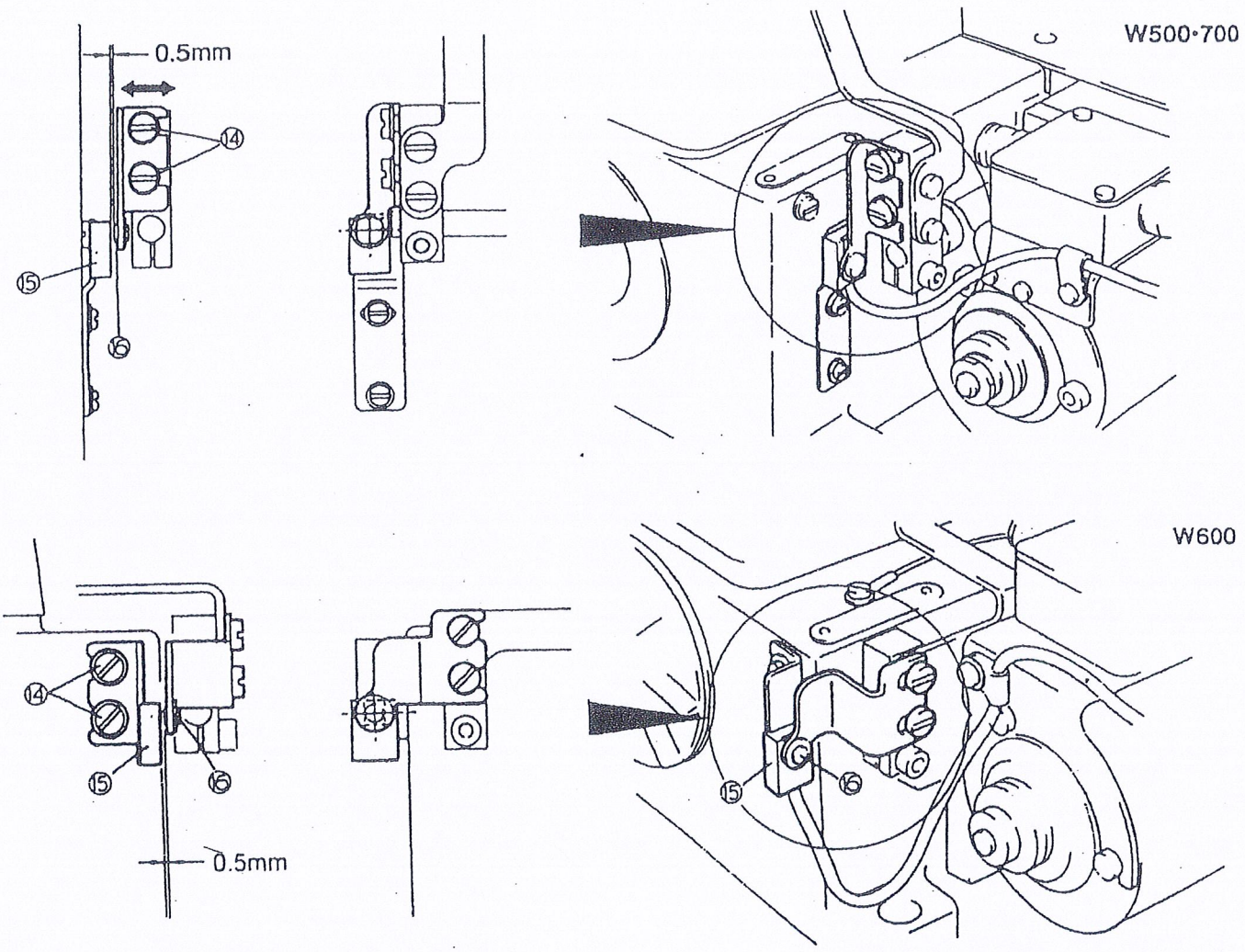

From the library of Superior Sewing Machine & Supply LLC - www.supsew.com

From the library of Superior Sewing Machine & Supply LLC - www.supsew.com

Thread releaser adjustment

1. Measuring 33mm from left edge of sewing machine to the left edge of fixing base, install the release lever with screw 2 for W500 and W700 Series.

2. While the screw 4 on the jointer 3 has not yet been tightened completely, the release lever 5 must be fix onto the base 1, then connect it to the jointer 3.

3. The release lever base 7 of W600 Series must be installed with screw 8 from the inner side of sewing machine to the side face of fixing base.

4. Please refer to the above W500 and W700 Series.

5. When the gap of 0.5mm happens between tension knob and tension plates 7, please tighten the screw 4 on jointer 3 of release lever 5.

6. Measuring A=37mm of the rod 9, tighten the screw for 9.

The tension of threads depends on the position of thread guide. For cotton thread, please adjust B=6mm, C=7mm, D=8.5mm, E=6.5mm, F=9mm, For elastic thread, please adjust the above length a little bit shorter.

If the upper covering thread can not be trimmed properly, please adjust the thread guide (13, for upper covering thread) at the position of not affecting the thread loop tension.

When trim the upper top covering thread, please adjust G=15mm.

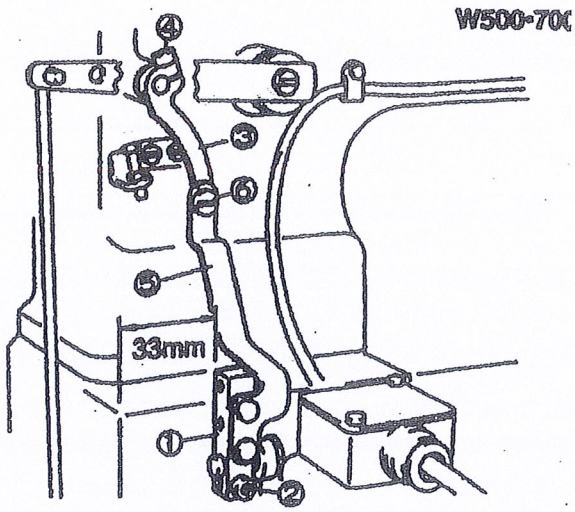

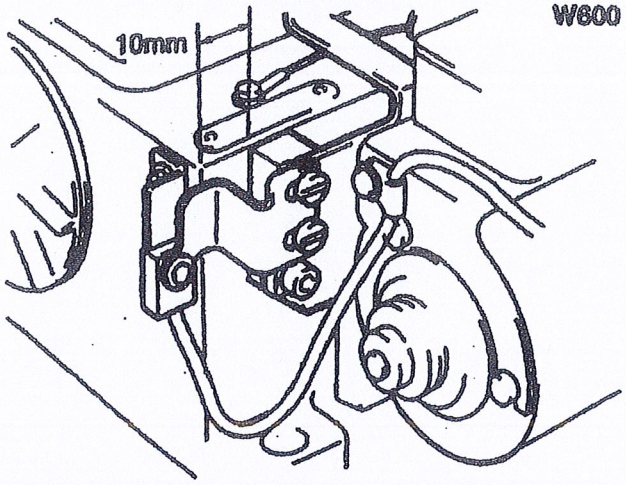

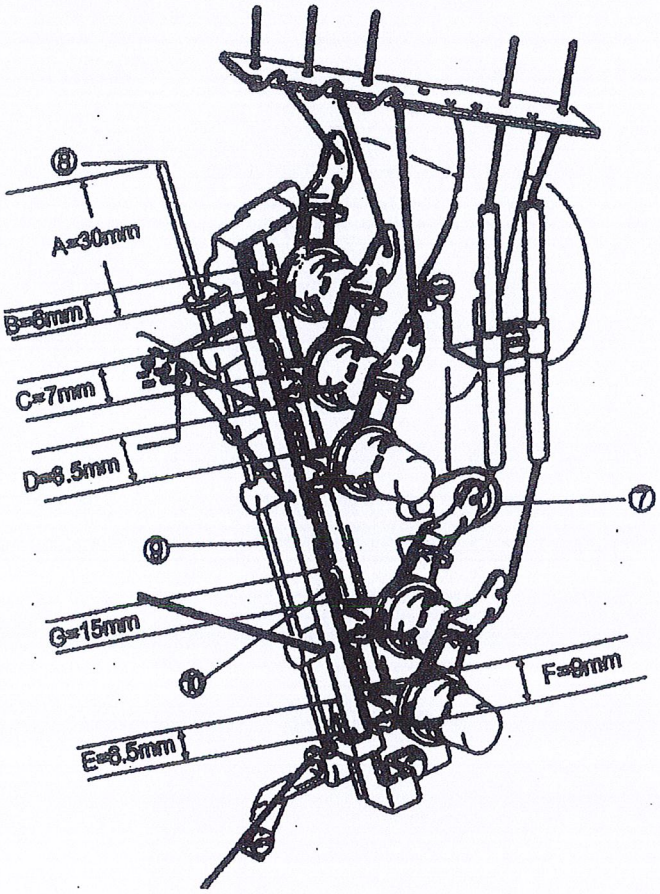

From the library of Superior Sewing Machine & Supply LLC - www.supsew.com

From the library of Superior Sewing Machine & Supply LLC - www.supsew.com

The Adjustment on Top Trimming Device

1. When the needles are at the highest dead point (P), adjust the movable knife's 1 stroke to the longest. Be careful not to contact it to the left needle and spreader 2. Let the knife stretches down below the spreader base foe 2 ~ 3mm, enabling it to catch the threads when the trimming function is activated. (see picture A and B)

2. The Adjustment of Knife's Direction: Release 2 screw 3 and the knife base. Adjust it to the proper direction. (see picture A)

3. The Adjustment of Knife's Angle: Release 2 screw 4 and the knife base. Adjust the movable knife's point in accordance with the point of spreader. (see picture B)

4. The Adjustment of Pressure on the Thread Catcher: Release the screw 5 counterclockwise, then adjust screw 6 – if turn counterclockwise, then it will be weak; if turn clockwise, then it will be strong. When completed, tighten the screw 5 clockwise.

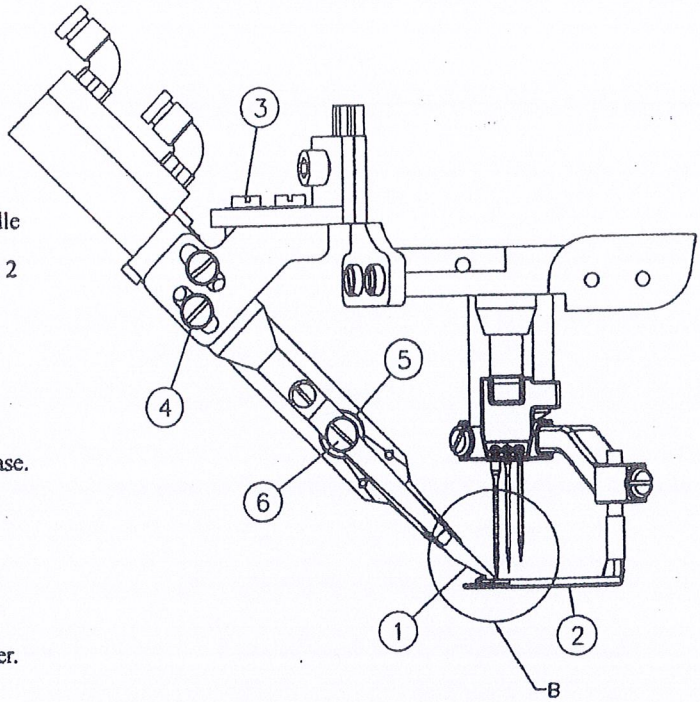

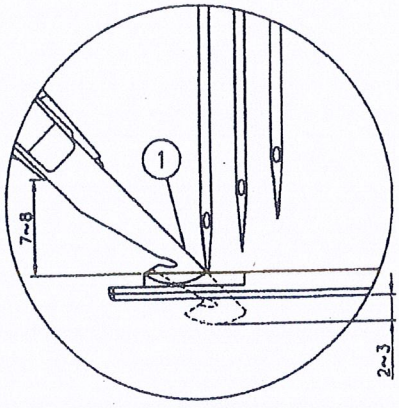

PART B in the enlargement ratio of 3

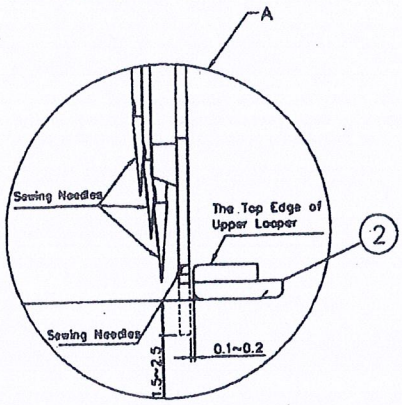

Pneumatic Movable Knife Speed Adjustment

◇ If the speed is too slow, release the speed regulator screw. Turn the speed regulator knob clockwise.

◇ If the speed is too quick, release the speed regulator screw. Turn the speed regulator knob counterclockwise.

From the library of Superior Sewing Machine & Supply LLC - www.supsew.com

From the library of Superior Sewing Machine & Supply LLC - www.supsew.com

Thread wiper adjustment

!CAUTION

!Always turn off the power first and then well-qualified technicians should adjust the thread wiper.

1. Temporarily fix bracket 1 horizontally with screws 2 . Screws 2 should be in the center of the slots.

2. Tigthen screw 5 to position lever 3 horizontally.
   There should be a 0 to 0.3mm clearance between bracket 1 and stopper ring 4 . And dimension G is 10mm.

3. Secure shaft 6 with screw 7 . Dimension H should be 2mm.

4. Position thread wiper 8 with screws 9 and 2.
   The distance between the left end of the thread wiper and the center of the needle bar should be approximately 19mm when the thread wiper is all the way to the left and the clearance between the left needle and thread wiper should be approximately 0.7mm.

5. Position thread wiper 8 parallel with flat spring 10 with screw 11.

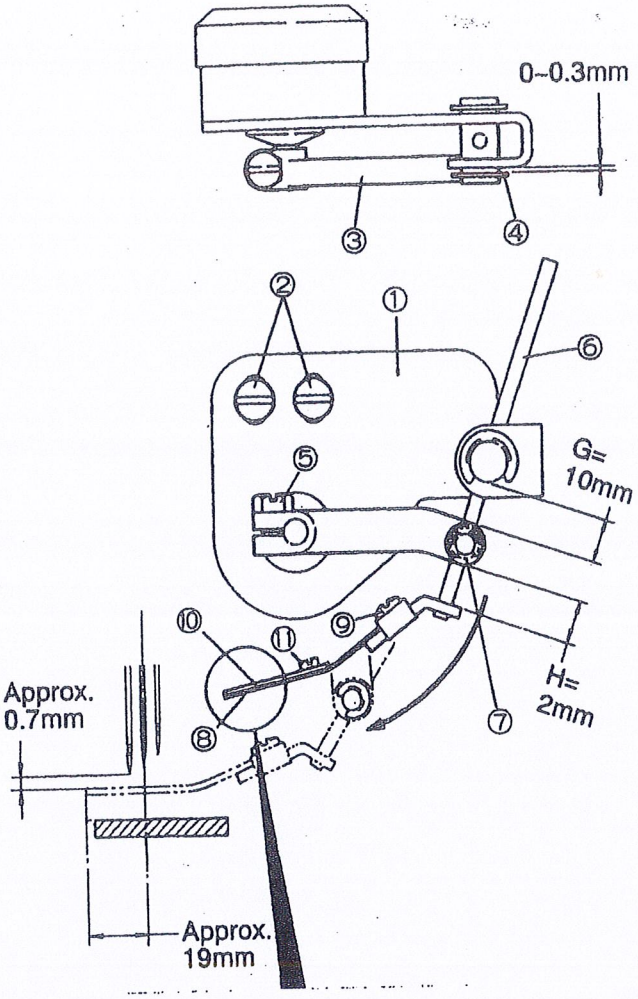

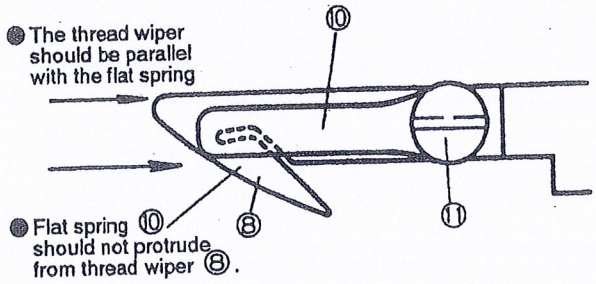

From the library of Superior Sewing Machine & Supply LLC - www.supsew.com

From the library of Superior Sewing Machine & Supply LLC - www.supsew.com

Adjustment on Pneumatic Wiper Kit

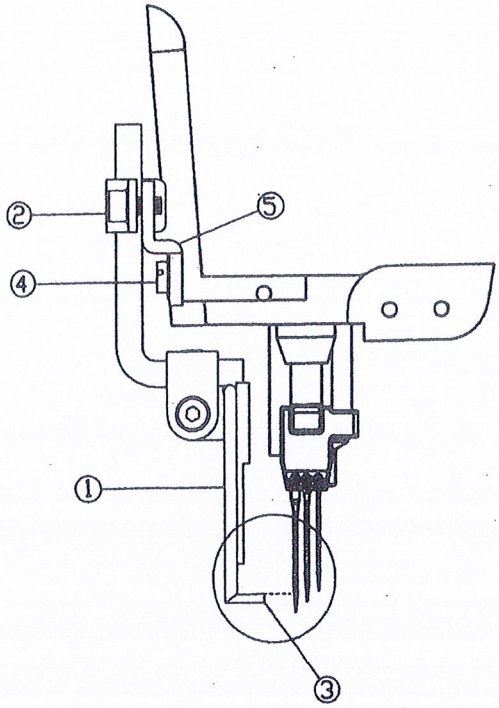

When the needles are in the highest dead point (point "p"):

1. With screw 4, fixing the base 5 onto the machine. Adjusting the whole bracket in proper position.

2. The Height of Wiper: Release the screw 2 and the fixing base, adjust air nozzle 3 to the position of 0.5 ~ 1mm under the needle eyelet.

3. The Direction of Wiper: Release 2 screw 4 and the fixing base, adjust air nozzle 3 to the rear position of needles.

The Adjustment of Air Volume in Wiper Kit

◇ If the air volume is insufficient, release the air regulator screw, turn the regulator knob clockwise.

◇ If the air volume is more than sufficient, release the air regulator screw, turn the regulator knob counterclockwise.

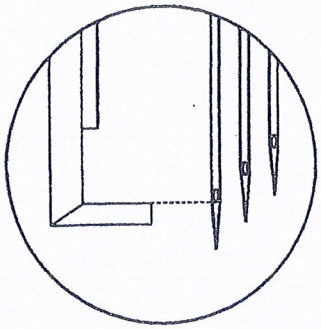

From the library of Superior Sewing Machine & Supply LLC - www.supsew.com

From the library of Superior Sewing Machine & Supply LLC - www.supsew.com