1-Needle Lockstitch Computer Control Cycle Machine
電子サイクルマシン

AMS-210B

Compact Type Programming Device
簡易入力装置

PGM-1

PARTS LIST

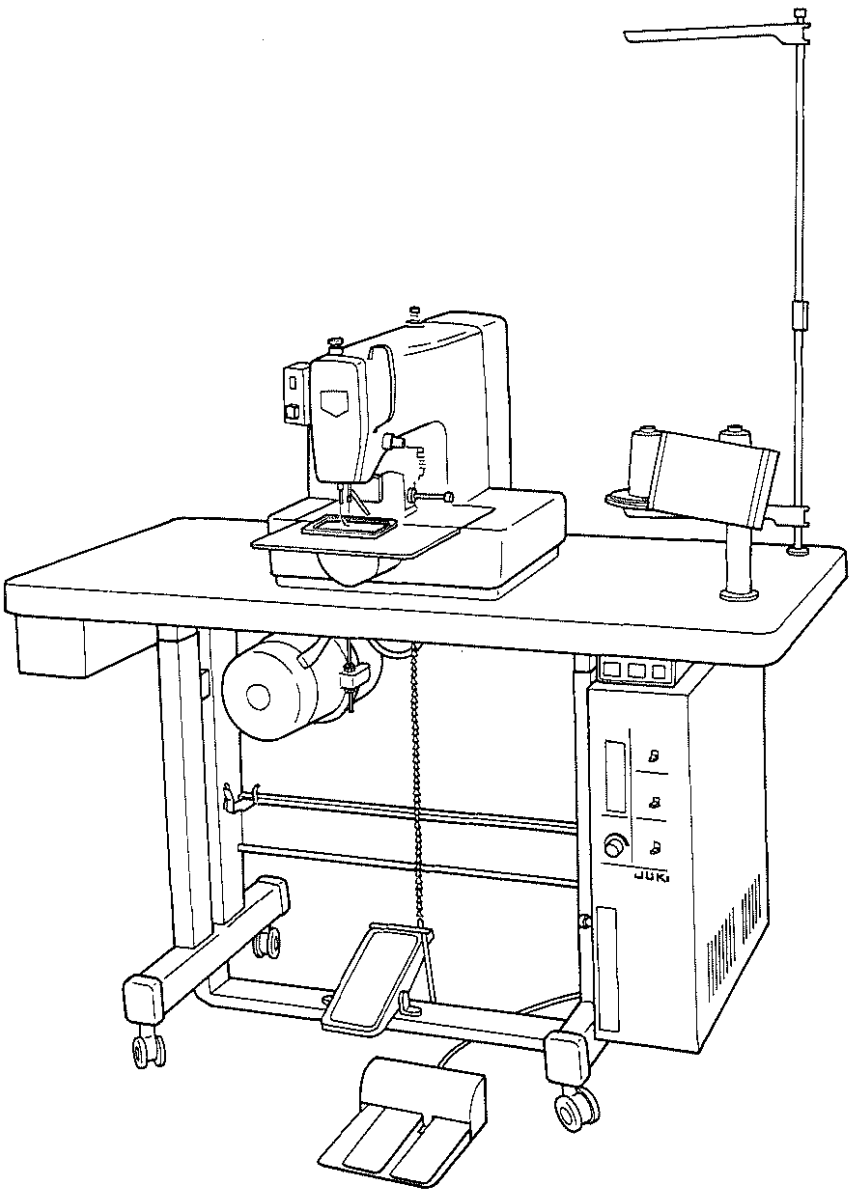

19562909
No.0457-00

From the library of: Superior Sewing Machine & Supply LLC

From the library of: Superior Sewing Machine & Supply LLC

HOW TO MAKE USE OF THIS PARTS LIST
パーツリストの見方

1. The part numbers of parts shown in the figure indicate the corresponding numbers (Ref. No.) shown by the Index.
   図に示された部品の品番は、図にふられているNo.(Ref.No.)に対応するインデックスによって、その品番がわかります。

2. Explanation of codes
   記号の説明

   1) Codes on the "Note" column
      "注記" 欄の記号

      ① ☆ ..... means this part is changed from the previous parts list.
      前回のパーツリストに対して今回変更された部品を意味します。

      ② #01 ..... refer to the "Note" explanation at bottom of page.
      ◇01 ページ下の "注記" の説明を参照して下さい。

   2) Codes on the "E.C. (Engineering change)" column
      "変更年月" 欄の記号

      ① A.10/83 .... Added from October, 1983
      1983年10月より追加された。

      ② D.10/83 .... Obsoleted from October, 1983
      1983年10月より削除された。

      ③ When previous parts (Obsoleted part) and new parts (Added parts) are not interchangeable with each other:
      部品の互換性がない変更の場合

      In this case, even obsoleted part (D.) can be ordered with the obsoleted part number, so select the parts with changed dates and place your orders.
      この場合は削除(D)された品番でもご注文できますから、変更年月により、いずれかの部品を選択してご注文下さい。

      Example (例)

Ref. No.	Note 注記	Part No. 品番	Description	E.C. 変更年月	品名	Amt. Req. 数量
1	☆	B1401-100-000	Needle bar	D.10/83	ハリホー	–
1-1	☆	B1401-100-000-A	Needle bar	A.10/83	ハリホー	1
2	☆	B1105-200-000	Frame cover	D.10/83	B1105-300-000	–
	☆	B1105-300-000	Frame cover	A.10/83	フレームカバー	1

      ④ In case when previous parts and new part are interchangeable with each other:
      部品の互換性がある場合の変更

      In this case the new part number is replaced on the " 品名 (Japanese)" column of the previous parts, so please order by the new part number.
      この場合は、旧部品の和文品名欄にそれにかわる新しい品番が記入してありますので、新しい品番でご注文下さい。

      ⑤ C.10/83

1	☆	B1105-500-000	Frame cover	C.10/83	~~B1105-600-000~~	1
		Correct No. 正しい品番			Wrong No. 誤まり品番	

      Please order by the correct part number.
      正しい品番でご注文下さい。

      ⑥ M.10/83 ..... The amount required is changed from October, 1983
      The new amount required is shown in the "Amt. Req". column.
      1983年10月より数量が変更になった。この場合数量欄には新しい数量が表示してあります。

   3) Codes on the "Amt. Req." column
      "数量" 欄の記号

      ① 2 ..... Indicates amount required is 2.
      数量、2個を表わします。

      ② 2.0 ..... Indicates length in meters. (unit is meter)
      長さ、2メートルを表わします。(単位はメートルです)

      ③ – ..... Indicates parts obsoleted from the parts list.
      このパーツリストから削除された部品です。

      ④ (1) ..... Indicates sub parts which construct the assembly part.
      Assembly part is shown as "asm." and クミ in Japanese, in the "Description" column.
      組部品を構成している子部品を表わします。組部品は品名欄に英文で "asm." 和文でクミと表示してあります。

When Ordering The Spare Parts:

In order to ensure that we deliver the correct parts to you, please clearly state when ordering the corresponding PART NUMBER (ex. B1109-012-A00) and also the PARTS LIST NUMBER (ex. 0010-01, given at the top right of the cover) or the MACHINE SERIAL NUMBER, because there are some parts which have been changed.

補用部品注文の際のご注意

このパーツリストに記載されている補用部品をご注文の際は、部品の番号(例えば、B1109-012-A00)でご注文下さい。合わせて、ご覧のパーツリストの管理番号(表紙右上、例えば、No.0010-01)又は、機械番号をご連絡頂ければ幸いです。又、改良のため部品の一部が変更になる場合がありますのでご了承下さい。

From the library of: Superior Sewing Machine & Supply LLC

CONTENTS

目　次

ＡＭＳ－２１０Ｂ

1. FRAME & MISCELLANEOUS COVER COMPONENTS (1) 1
   頭部・外装関係 (1)
2. FRAME & MISCELLANEOUS COVER COMPONENTS (2) 3
   頭部・外装関係 (2)
3. MAIN SHAFT & NEEDLE BAR COMPONENTS 5
   上軸・針棒関係
4. PRESSER PLATE COMPONENTS 7
   押え関係
5. PRESSER MECHANISN COMPONENTS 9
   中押え関係
6. SHUTTLE DRIVER SHAFT COMPONENTS 11
   下軸関係
7. WIPER & TENSION CONTROLLER COMPONENTS 13
   ワイパー・糸調子関係
8. TENSION RELEASE COMPONENTS 15
   糸ゆるめ関係
9. X,Y DRIVE COMPONENTS 17
   Ｘ，Ｙ　駆動関係
10. X,Y STEPPING MOTER COMPONENTS 19
    Ｘ，Ｙ　ステッピングモーター関係
11. FEED MECHANISM COMPONENTS 21
    送り台関係
12. LUBRICATION COMPONENTS 23
    給油関係
13. SENSOR COMPONENTS 25
    センサー関係
14. SPECIAL ORDER PARTS COMPONENTS (1) 27
    特別注文部品関係 (1)
15. SPECIAL ORDER PARTS COMPONENTS (2) (For L,J)..... 29
    特別注文部品関係 (2) (L,J仕様)
16. TABLE COMPONENTS 31
    脚卓関係

From the library of: Superior Sewing Machine & Supply LLC

CONTENTS
目　次

17. CONTROL BOX COMPONENTS 33
制御ボックス関係
18. OPERATION BOX COMPONENTS 34
操作ボックス関係
19. CIRCUIT BOARD COMPONENTS 35
基板関係
20. POWERW SUPPLY & CORD COMPONENTS 37
電源・コード関係
21. PEDAL & ACCESSORIES COMPONENTS 39
ペダル・付属品関係
22. THREAD STAND COMPONENTS 40
糸立装置関係

ＰＧＭ－１

1. FRAME & DEVICE COMPONENTS 41
本体・装置関係
2. LED CIRCUIT BOARD COMPONENTS 42
ＬＥＤ　基板関係
ＡＭＳ－２１０Ｂ (WITH INVERTING DEVICE)(For T,J)..... 43
ＡＭＳ－２１０Ｂ 反転装置関係 (T,J仕様)
NUMERICAL INDEX OF PARTS 45
索引

From the library of: Superior Sewing Machine & Supply LLC

1. FRAME & MISCELLANEOUS COVER COMPONENTS (1)

頭部・外装関係 (1)

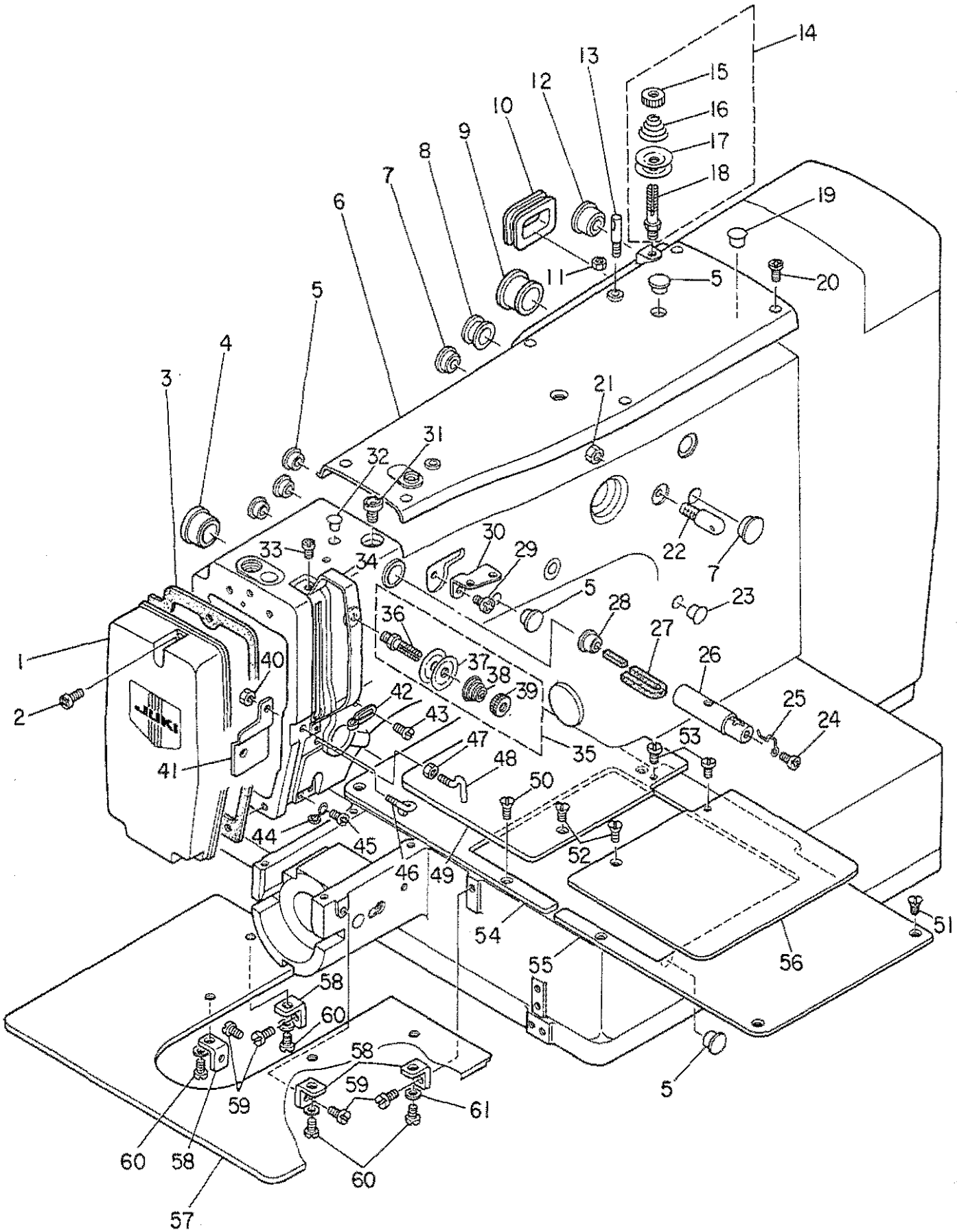

From the library of: Superior Sewing Machine & Supply LLC

1	B1105-210-0A0	FACE PLATE ASM.	ﾒﾝﾌﾞｶﾊﾞｰ ｸﾐ	1
2	SS-4111015-SP	SCREW 11/64-40 L=10	ﾅﾍﾞﾈｼﾞ 11/64-40 L=10	3
3	B1117-210-000	FACE PLATE GASKET	ﾒﾝﾌﾞｶﾊﾞｰ ﾊﾟｯｷﾝ	1
4	TA-2100904-R0	RUBBER PLUG	ﾄﾒｾﾝ	1
5	TA-1050504-R0	RUBBER PLUG	ﾄﾒｾﾝ	6
6	B1104-210-000	TOP COVER	ｼﾞｮｳﾒﾝｶﾊﾞｰ	1
7	TA-1250406-R0	RUBBER PLUG	ﾄﾒｾﾝ D=12.5 L=4	2
8	B1126-210-000	WIRE BUSHING	ﾕｰﾄﾞﾌﾞｯｼｭ	1
9	TA-2351305-R0	RUBBER PLUG	ﾄﾒｾﾝ D=23.5 L=11.5	1
10	B3515-210-000	RUBBER PLUG	ﾄﾒｾﾝ J	1
11	NS-6110310-SP	NUT 11/64-40	ﾛｯｶｸﾅｯﾄ 11/64-40	1
12	B1150-490-000	RUBBER PLUG	ｳﾜｵｸﾘﾚﾝｹﾞｳｳﾃﾞ ｷｬｯﾌﾟ	1
13	100-07003	THREAD GUIDE PIN	ｲﾄﾏｷ ｱﾝﾅｲﾎﾞｰ	1
14	B1115-232-0A0	TENSION CONTROLLER NO.1	ﾀﾞｲ1 ｲﾄﾁｮｰｼ ｸﾐ	1
15	B3125-012-000	THREAD TENSION STUD NUT	ｲﾄﾁｮｰｼ ﾅｯﾄ	(1)
16	B1115-232-000	TENSION SPRING NO.1	ﾀﾞｲ1 ｲﾄﾁｮｰｼ ﾊﾞﾈ	(1)
17	B3126-012-000	TENSION DISC	ｲﾄﾁｮｰｼｻﾗ	(2)
18	B3123-352-000	TENSION POST NO.1	ｲﾄﾁｮｰｼﾎﾟｰ	(1)
19	B1405-012-000	CAP	ｷｬｯﾌﾟ	1
20	SS-4111015-SP	SCREW 11/64-40 L=10	ﾅﾍﾞﾈｼﾞ 11/64-40 L=10	6
21	NS-6150310-SP	NUT 15/64-28	ﾛｯｶｸﾅｯﾄ 15/64-28	1
22	B1123-280-000	THREAD GUIDE, NO.1	ﾀﾞｲｲﾁ ｲﾄｱﾝﾅｲ	1
23	TA-0850604-R0	RUBBER PLUG	ﾄﾒｾﾝ	1
24	SS-4110515-SP	SCREW 11/64-40 L=5	ﾅﾍﾞﾈｼﾞ 11/64-40 L=5	1
25	B1127-280-000	SILICON OIL THREAD GUIDE	ｴｽﾚﾝｲﾄｱﾝﾅｲ	1
26	135-01309	SILICON OIL PIPE	ｴｽﾚﾝﾊﾟｲﾌﾟ	1
27	135-01705	SILICON OIL FELT	ｴｽﾚﾝﾌｪﾙﾄ	1
28	TA-1050504-R0	RUBBER PLUG	ﾄﾒｾﾝ	1
29	SS-4150715-SP	SCREW 15/64-28 L=7	ﾅﾍﾞﾈｼﾞ 15/64-28 L=7	1
30	B1111-232-000	THREAD GUIDE PLATE	ｲﾄｱﾝﾅｲ ｲﾀ	1
31	135-01408	SILICON OIL LUBRICATING HOLE	ｴｽﾚﾝ ﾁｭｳﾕｳｹﾞﾁ	1
32	TA-0750704-R0	RUBBER PLUG	ﾄﾒｾﾝ	1
33	SS-4090715-SP	SCREW 9/64-40 L=7	ﾅﾍﾞﾈｼﾞ 9/64-40 L=7	2
34	B1122-280-000	THREAD TAKE-UP LEVER OIL GAURD	ﾃﾝﾋﾟﾝｶﾊﾞｰ	1
35	B1115-232-0A0	TENSION CONTROLLER NO.1	ﾀﾞｲ1 ｲﾄﾁｮｰｼ ｸﾐ	1
36	B3123-352-000	TENSION POST NO.1	ｲﾄﾁｮｰｼﾎﾟｰ	(1)
37	B3126-012-000	TENSION DISC	ｲﾄﾁｮｰｼｻﾗ	(2)
38	B1115-232-000	TENSION SPRING NO.1	ﾀﾞｲ1 ｲﾄﾁｮｰｼ ﾊﾞﾈ	(1)
39	B3125-012-000	THREAD TENSION STUD NUT	ｲﾄﾁｮｰｼ ﾅｯﾄ	(1)
40	NS-6090310-SP	NUT 9/64-40	ﾛｯｶｸﾅｯﾄ 9/64-40	1
41	B3521-210-000	OIL SHIELD	ｲﾄﾁｮｳｼ ﾕﾎﾞｳﾊﾞﾝ	1
42	B1126-552-000	FRAME THREAD GUIDE A	ｱｰﾑ ｲﾄｱﾝﾅｲ A	1
43	SS-3090610-SP	SCREW 9/64-40 L=6	ﾏﾙﾈｼﾞ 9/64-40 L=6	1
44	B1124-280-000	FRAME THREAD GUIDE (B)	ｱｰﾑ ｲﾄｱﾝﾅｲ B	1
45	SS-4110715-SP	SCREW 11/64-40 L=7	ﾅﾍﾞﾈｼﾞ 11/64-40 L=7	1
46	B3114-771-000	TAKE-UP THREAD GUIDE	ｲﾄｱﾝﾅｲ	1
47	NS-6090310-SP	NUT 9/64-40	ﾛｯｶｸﾅｯﾄ 9/64-40	1
48	B1125-280-000	TENSION THREAD GUIDE (L-SHAPED)	Lｶﾞﾀ ｲﾄｱﾝﾅｲ	1
49	B1118-210-000	AUXILIARY COVER, LEFT	ｵｸﾘﾀﾞｲ ﾎｼﾞｮｶﾊﾞｰ ﾋﾀﾞﾘ	1
50	SS-1110840-SP	SCREW 11/64-40 L=8	ｻﾗﾈｼﾞ 11/64-40 L=8	4
51	SS-1110840-SP	SCREW 11/64-40 L=8	ｻﾗﾈｼﾞ 11/64-40 L=8	4
52	SS-1110840-SP	SCREW 11/64-40 L=8	ｻﾗﾈｼﾞ 11/64-40 L=8	2
53	SS-7110720-SP	SCREW 11/64-40 L=7	ﾏﾙﾋﾗﾈｼﾞ 11/64-40 L=7	2
54	B1109-210-000	LEFT COVER	ｵｸﾘﾀﾞｲｶﾊﾞｰ ﾋﾀﾞﾘ	1
55	B1108-210-000	RIGHT COVER	ｵｸﾘﾀﾞｲｶﾊﾞｰ ﾐｷﾞ	1
56	B1110-210-000	AUXILIARY COVER, RIGHT	ｵｸﾘﾀﾞｲ ﾎﾞｼﾞｮｶﾊﾞｰ ﾐｷﾞ	1
57	B1112-210-000	NEEDLE PLATE AUXILIARY COVER	ﾊﾘｲﾀ ﾎｼﾞｮｶﾊﾞｰ	1
58	B1113-210-000	AUXILIARY COVER SUPPORT	ﾊﾘｲﾀ ﾎｼﾞｮｶﾊﾞｰ ｻｻｴ	4
59	SS-7110710-SP	SCREW 11/64-40 L=7	ﾏﾙﾋﾗﾈｼﾞ 11/64-40 L=7	4
60	SS-6110610-TP	SCREW 11/64-40 L=6	ﾋﾗﾈｼﾞ 11/64-40 L=6	4
61	WP-0450000-SD	WASHER 4.5X8X0.5	ﾋﾗｻﾞｶﾞﾈ 4.5X8X0.5	4

From the library of: Superior Sewing Machine & Supply LLC

2. FRAME & MISCELLANEOUS COVER COMPONENTS (2)
頭部・外装関係 (2)

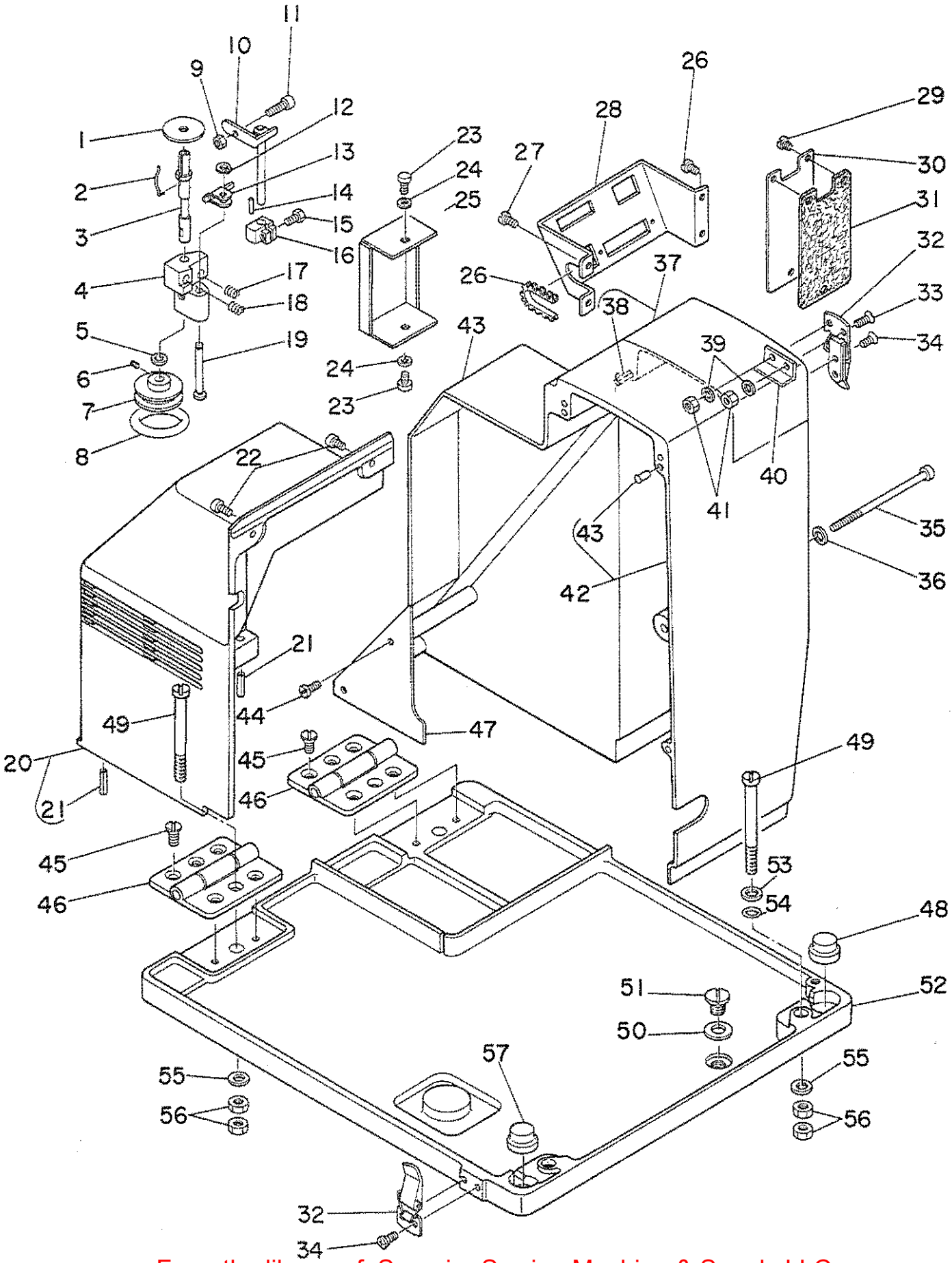

From the library of: Superior Sewing Machine & Supply LLC

1	B3205-210-000	CUSHION	ﾎﾞﾋﾞﾝｻﾞ	1
2	B3212-761-000	LATCH SPRING	ﾎﾞﾋﾞﾝ ﾄﾒﾊﾞﾈ	1
3	B3204-210-000	SPINDLE	ｲﾄﾏｷｼﾞｸ	1
4	B3210-210-000	BOBBIN WINDER BASE	ｲﾄﾏｷｼﾞｸﾀﾞｲ	1
5	WP-0651056-SH	WASHER 6.5X11X1	ﾋﾗｻﾞｶﾞﾈ 6.5X11X1	1
6	SS-8110520-TP	SCREW 11/64-40 L= 4.5	ﾄﾒﾈｼﾞ 11/64-40 L=4.5	2
7	B3211-210-000	BOBBIN WINDER WHEEL	ｲﾄﾏｷｸﾞﾙﾏ	1
8	B3212-210-000	FRICTION WHEEL	ｲﾄﾏｷ ﾏｻﾂｸﾞﾙﾏ	1
9	NS-6110530-SP	NUT 11/64-40	ﾛｯｶｸﾅｯﾄ 11/64-40	1
10	B3201-210-0A0	STOP LATCH ASM.	ﾎﾞﾋﾞﾝｵｻｴ ｸﾐ	1
11	B3208-280-000	BOBBIN WINDER ADJUSTING SCREW	ﾎﾞﾋﾞﾝ ｵｻｴ ﾎﾞｽ	1
12	D2430-555-B00	SNAP RING	ｶﾑﾛｰﾗ ｼﾞｸ Cﾘﾝｸﾞ	1
13	B3207-210-000	TRIP LATCH	ｲﾄﾏｷ ﾁｮｳｾﾂﾀｲ	1
14	PS-0150065-KP	SPRING PIN 1.5X6	ｽﾌﾟﾘﾝｸﾞﾋﾟﾝ 1.5X6	1
15	SS-9111020-TP	SCREW 11/64-40 L=10	ﾛｯｶｸﾎﾞﾙﾄ 11/64-40 L=10	1
16	B3203-210-000	CAM	ｲﾄﾏｷｶﾑ	1
17	B3208-210-000	SPRING A	ｲﾄﾏｷ ﾁｮｳｾﾂﾀｲ ﾊﾞﾈ A	1
18	B3209-210-000	SPRING B	ｲﾄﾏｷ ﾁｮｳｾﾂﾀｲ ﾊﾞﾈ B	1
19	B3206-210-000	SCREW STUD	ｲﾄﾏｷｼﾞｸﾀﾞｲ ﾄﾒｼﾞｸ	1
20	B1106-210-0A0	SIDE COVER ASM.	ｿｸﾒﾝｶﾊﾞｰ ｸﾐ	1
21	PS-0400182-K0	SPRING PIN 4.0X18	ｽﾌﾟﾘﾝｸﾞﾋﾟﾝ 4.0X18	(2)
22	SS-4111015-SP	SCREW 11/64-40 L=10	ﾅﾍﾞﾈｼﾞ 11/64-40 L=10	2
23	SM-4040601-SC	SCREW M4X0.7 L=6	ﾅﾍﾞｺﾈｼﾞ M4X0.7 L=6	2
24	WP-0430801-SC	WASHER M4	ﾋﾗｻﾞｶﾞﾈ ﾐｶﾞｷﾏﾙ M4	2
25	B1128-210-000	COVER	ﾄｰﾌﾞｽｲｯﾁ ﾄﾘｯｹﾀﾞｲｶﾊﾞｰ	1
26	B1136-210-000	FREEHEARTED BUSHING	ｼﾞｻﾞｲﾌﾞｯｼｭ	1
27	SS-7110710-SP	SCREW 11/64-40 L=7	ﾏﾙﾋﾗﾈｼﾞ 11/64-40 L=7	4
28	B1130-210-000	CONNECTOR INSTALLING PLATE	ｺﾈｸﾀ ﾄﾘｯｹｲﾀ	1
29	SS-7110410-SP	SCREW 11/64-40 L=4	ﾏﾙﾋﾗﾈｼﾞ 11/64-40 L= 4	3
30	B1125-210-000	Y MOTOR BRACKET COVER	Yﾓｰﾀﾀﾞｲｶﾊﾞｰ	1
31	B1137-210-000	COVER GASKET	Yﾓｰﾀ ﾀﾞｲ ｶﾊﾞｰﾊﾟｯｷﾝ	1
32	B1131-210-0A0	PUNCH HINGE ASM.	ﾊﾟﾝﾁｼﾞｮｳ ｸﾐ	2
33	SM-1031401-SN	SCREW M3X0.5 L=14	ｻﾗｺﾈｼﾞ M3X0.5 L=14	2
34	SM-1030801-SA	SCREW M3X0.5 L=8	ｻﾗｺﾈｼﾞ M3X0.5 L=8	6
35	SM-4060001-SF	SCREW M6 L=100	ﾅﾍﾞｺﾈｼﾞ M6 L=100	1
36	WP-0671016-SE	WASHER 6.7X13X1	ﾋﾗｻﾞｶﾞﾈ 6.7X13X1	1
37	B1121-210-0A0	SMALL BELT COVER ASM.	ﾍﾞﾙﾄｶﾊﾞｰ ｼｮｳ ｸﾐ	1
38	PS-0400182-K0	SPRING PIN 4.0X18	ｽﾌﾟﾘﾝｸﾞﾋﾟﾝ 4.0X18	(4)
39	WP-0320501-SC	WASHER M3	ﾋﾗｻﾞｶﾞﾈ 3.2X7X0.5	2
40	B1140-210-000	STOPPER	ﾍﾞﾙﾄｶﾊﾞｰｼｮｳ ｽﾄｯﾊﾟ	1
41	NM-6030001-SC	NUT M3	ﾛｯｶｸﾅｯﾄ M3X0.5 1ｼｭ	2
42	B1107-210-0B0	BELT COVER ASM.	ﾍﾞﾙﾄｶﾊﾞｰ ｸﾐ	1
43	TA-0550604-R0	RUBBER PLUG	ﾄﾒｾﾝ	(12)
44	SS-7110840-SP	SCREW 11/64-40 L=7.8	ﾏﾙﾋﾗﾈｼﾞ 11/64-40 L=7.8	2
45	SM-1051001-SC	SCREW M5 L=10	ｻﾗｺﾈｼﾞ	8
46	B1111-210-000	BED HINGE	ﾍﾞｯﾄﾞﾋﾝｼﾞ	2
47	B1122-210-000	BELT COVER LID	ﾍﾞﾙﾄｶﾊﾞｰﾌﾀ	1
48	B1116-210-000	RUBBER PAD	ﾎﾞｳｼﾝｺﾞﾑ	1
49	SM-6056550-SP	SCREW M5 L=65	ﾋﾗﾈｼﾞ M5 L=65	4
50	B8219-125-000	OIL DRAIN CAP GASKET	ﾊｲﾕｱﾅﾌﾀ ﾊﾟｯｷﾝ	1
51	SS-7740740-SP	SCREW 3/8-28 L= 6.5	ﾏﾙﾋﾗﾈｼﾞ 3/8-28 L=6.5	1
52	B1103-210-000	MACHINE BASE	ﾍﾞｯﾄﾞ ﾄﾘｯｹﾀﾞｲ	1
53	WP-0520656-SA	WASHER 5.2X9.5X0.6	ﾋﾗｻﾞｶﾞﾈ 5.2X9.5X0.6	2
54	RO-0442401-00	RUBBER RING	Oﾘﾝｸﾞ	2
55	WP-0551626-SD	WASHER 5.5X22.0X1.6	ﾋﾗｻﾞｶﾞﾈ 5.5X22X1.6	4
56	NM-6050000-SC	NUT M5	ﾛｯｶｸﾅｯﾄ M5X0.8 1ｼｭ	8
57	B1116-210-00B	RUBBER PAD B	ﾎﾞｳｼﾝｺﾞﾑ (B)	1

From the library of: Superior Sewing Machine & Supply LLC

3. MAIN SHAFT & NEEDLE BAR COMPONENTS

上軸・針棒関係

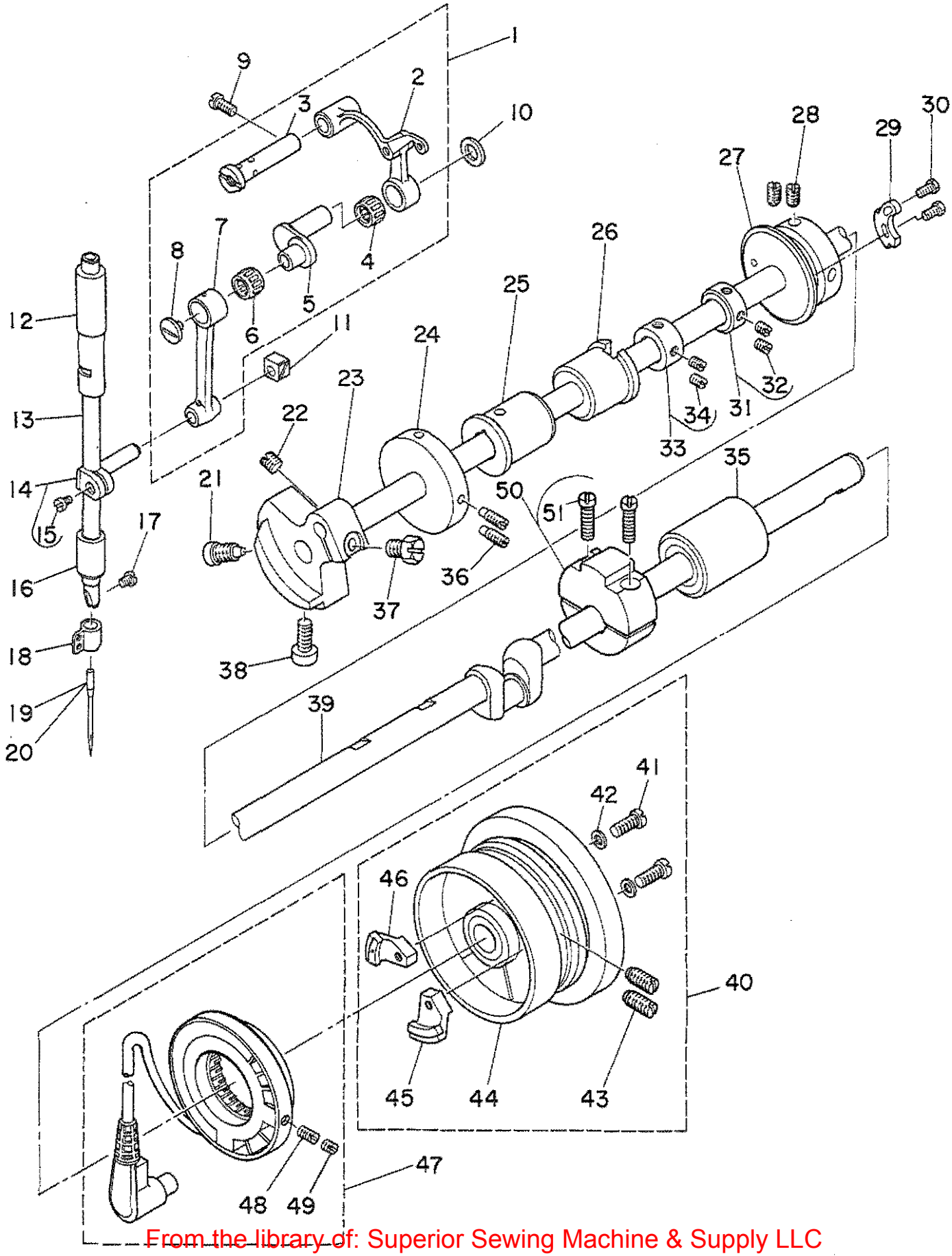

From the library of: Superior Sewing Machine & Supply LLC

1		B1901-280-0B0	THREAD TAKE-UP LEVER ASM.	ﾘﾝｸﾃﾝﾋﾟﾝ ｸﾐ	1
2		B1901-280-0A0	THREAD TAKE-UP LEVER ASM.	ﾃﾝﾋﾟﾝ ｸﾐ	(1)
3		B1901-280-0B0	THREAD TAKE-UP LEVER ASM.	ﾘﾝｸﾃﾝﾋﾟﾝ ｸﾐ	(1)
4		B1905-541-B00	NEEDLE BEARING, B	ﾃﾝﾋﾟﾝ ﾆｰﾄﾞﾙﾍﾞｱﾘﾝｸﾞ	(1)
5		B1203-280-000	NEEDLE BAR CRANK	ﾊﾘﾎﾞｰｸﾗﾝｸ	(1)
6		B1411-804-C00	BEARING (C)	ﾊﾘ ｸﾄﾞｰﾚﾊﾞｰ ﾍﾞｱﾘﾝｸﾞ C	(1)
7		B1404-280-000	NEEDLE BAR CRANK ROD	ﾊﾘﾎﾞｰ ｸﾗﾝｸﾛｯﾄﾞ	(1)
8		B1903-552-000	END SCREW LEFT	ﾋﾀﾞﾘﾈｼﾞ	(1)
9		SS-7151120-SP	SCREW 15/64-28 L=11	ﾏﾙﾋﾗﾈｼﾞ 15/64-28 L=11	1
10		B1223-771-000	THRUST WASHER,	ﾊﾘﾎﾞｰｸﾗﾝｸ ﾜｯｼｬｰ	1
11		B1414-232-000	CRANK SLIDE BLOCK	ｶｸｺﾞﾏ	1
12		B1402-210-000	BUSHING, UPPER	ﾊﾘﾎﾞｳﾒﾀﾙ	1
13		B1401-210-000	NEEDLE BAR	ﾊﾘﾎﾞｳ	1
14		B1411-552-0A0	NEEDLE BAR CONNECTION ASM.	ﾊﾘﾎﾞｰﾀﾞｷ ｸﾐ	1
15		SS-6090670-TP	SCREW 9/64-40 L=6	ﾋﾗﾈｼﾞ 9/64-40 6=6	(1)
16		B1403-280-000	NEEDLE BAR BUSHING, LOWER	ﾊﾘﾎﾞｰ ｼﾀﾒﾀﾙ	1
17		SS-7080510-TP	SCREW 1/8-44 L=4.5	ﾏﾙﾋﾗﾈｼﾞ 1/8-44 L=4.5	1
18		B1405-210-000	THREAD GUIDE A	ﾊﾘﾎﾞｳ ｲﾄｱﾝﾅｲ A	1
19		MDP-500B1400	NEEDLE DPX5 #14	ﾊﾘ DPX5 #14	1
20	#01	MC-2005010-00	NEEDLE #100	ﾊﾘ 134 100	1
21		SS-6681712-TP	SCREW 9/32-28 L=16.5	6ｶｸｱﾅﾎﾞﾙﾄ 9/32-28L=16.5	1
22		SS-8660610-TP	SCREW 1/4-40 L=6	ﾄﾒﾈｼﾞ 1/4-40 L=6	1
23		B1206-210-000	COUNTERWEIGHT	ﾂﾘｱｲｵﾓﾘ	1
24		B3213-205-000	BOBBIN WINDER DRIVING WHEEL	ｲﾄﾏｷｸﾄﾞｳｼｬ	1
25		B1202-210-000	BUSHING, FRONT	ｳﾜｼﾞｸ ﾏｴﾒﾀﾙ	1
26		B1203-210-000	BUSHING, INTERMEDIATE	ｳﾜｼﾞｸ ﾅｶﾒﾀﾙ	1
27		B2401-205-000	THREAD TRIMMER CAM	ｲﾄｷﾘｶﾑ	1
28		SS-8660810-TP	SCREW 1/4-40 L=8	ﾄﾒﾈｼﾞ 1/4-40 L=8	2
29		B2312-220-000	TENSION RELEASE NOTCH	ｲﾄﾕﾙﾒ ﾉｯﾁ	1
30		SS-9090833-TP	SCREW	ﾛｯｶｸﾎﾞﾙﾄ	2
31		CS-147101A-SH	THRUST COLLAR ASM. D=14.72 W=10	ｽﾗｽﾄｳｹ D=14.72 W=10 ｸﾐ	1
32		SS-8110410-TP	SCREW 11/64-40 L= 3.5	ﾄﾒﾈｼﾞ 11/64-40 L=3.5	(2)
33		CS-147101A-SH	THRUST COLLAR ASM. D=14.72 W=10	ｽﾗｽﾄｳｹ D=14.72 W=10 ｸﾐ	1
34		SS-8660610-TP	SCREW 1/4-40 L=6	ﾄﾒﾈｼﾞ 1/4-40 L=6	(2)
35		B1204-210-0A0	BUSHING, REAR	ｳﾜｼﾞｸ ｳｼﾛﾒﾀﾙ ｸﾐ	1
36		SS-8111610-SP	SCREW 11/64-40 L=15.5	ﾄﾒﾈｼﾞ 11/64-40 L=15.5	2
37		SS-9661230-CP	SCREW 1/4-40 L=12	ﾛｯｶｸﾎﾞﾙﾄ 1/4-40 L=12	1
38		SS-6151412-TP	SCREW 15/64-28 L=14	ﾛｯｶｸｱﾅﾎﾞﾙﾄ 15/64-28	1
39		B1201-210-000	MAIN SHAFT	ｳﾜｼﾞｸ	1
40		B1205-210-0B0	HAND WHEEL ASM.	ﾊｽﾞﾐｸﾞﾙﾏ ｸﾐ	1
41		SS-6111210-SP	SCREW 11/64-40 L=12	ﾋﾗﾈｼﾞ 11/64-40 L=12	(2)
42		WP-0450801-SD	WASHER 4.5X10.0X0.8	ﾋﾗｻﾞｶﾞﾈ 4.5X10X0.8	(2)
43		SS-8151550-SP	SCREW 15/64-28 L=15	ﾄﾒﾈｼﾞ 15/64-28 L=15	(2)
44		B1205-210-0A0	HAND WHEEL ASM.	ﾊｽﾞﾐｸﾞﾙﾏ ｸﾐ	(1)
45		B1208-210-0A0	SOLENOID INSTALLING PLATE ASM.	ﾏｸﾞﾈｯﾄ ﾄﾘｯｹﾀﾞｲ ｸﾐ	(1)
46		M4007-110-0AB	MAGNET BASE B ASM.	ﾏｸﾞﾈｯﾄ ﾄﾘｯｹﾀﾞｲ B ｸﾐ	(1)
47		B1209-210-0A0	GENERATOR STATOR ASM.	ﾊｯﾃﾞﾝｷ ｽﾃｰﾀ ｸﾐ	1
48		SS-8111010-TP	SCREW 11/64-40 L=9.5	ﾄﾒﾈｼﾞ 11/64-40 L=9.5	(2)
49		SS-8110422-TP	SCREW 11/64-40 L=4	ﾄﾒﾈｼﾞ 11/64-40 L=4	(2)
50		B1207-205-0A0	CRANK BALANCER ASM.	ｸﾗﾝｸﾊﾞﾗﾝｻ ｸﾐ	1
51		SS-6122510-SP	SCREW 3/16-28 L=25	ﾋﾗﾈｼﾞ 3/16-28 L=25	(2)

Note(注記) #01..... For JE　　JE用

From the library of: Superior Sewing Machine & Supply LLC

4. PRESSER PLATE COMPONENTS

押え関係

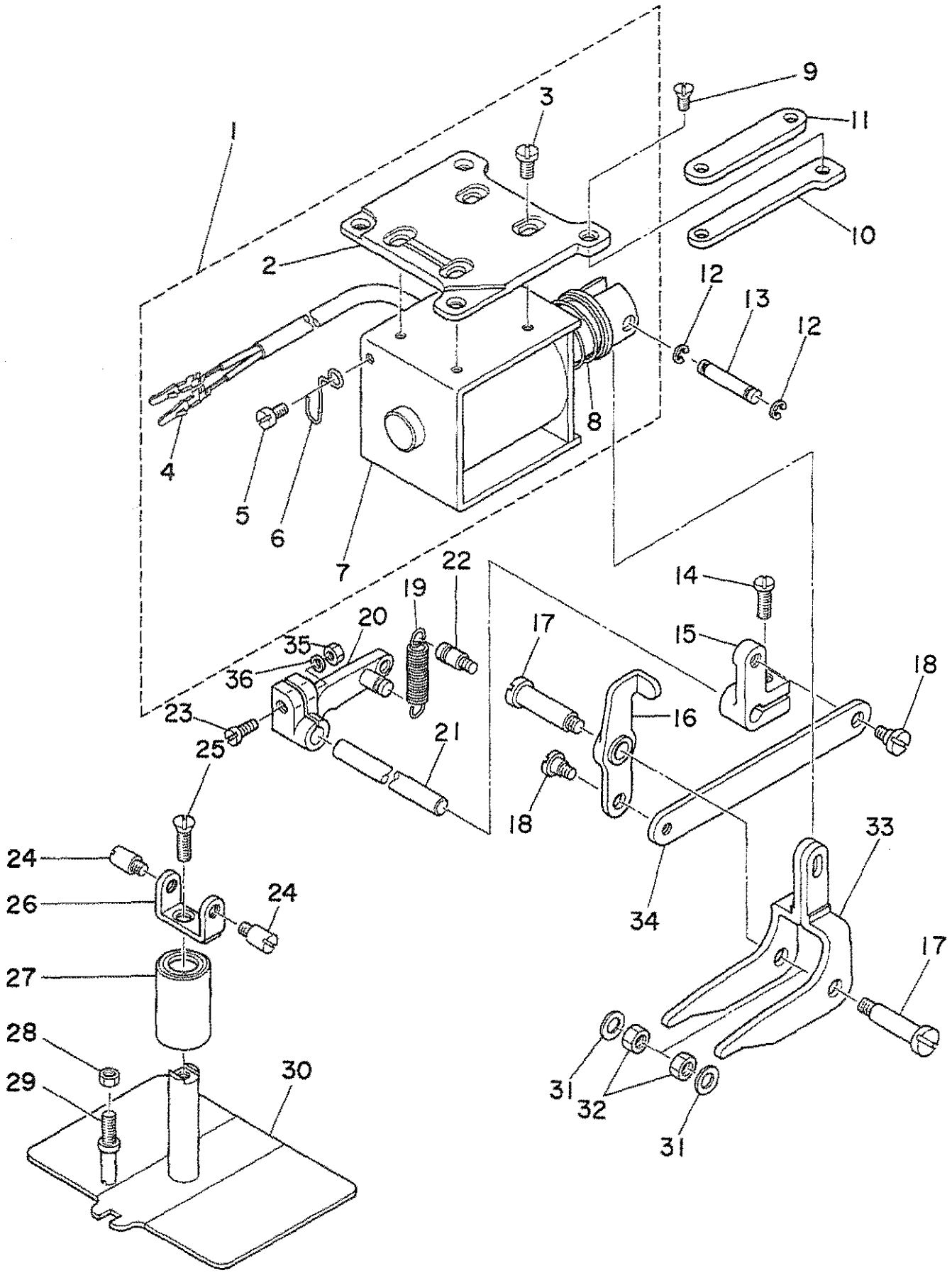

From the library of: Superior Sewing Machine & Supply LLC

1	B1508-210-0A0	SOLENOID ASM.	ヌノオサエ ソレノイド クミ	1
2	B1507-210-000	SOLENOID INSTALLING PLATE	ソレノイド コテイバン	(1)
3	SS-7110840-SP	SCREW 11/64-40 L=7.8	マルヒラネジ 11/64-40 L=7.8	(4)
4	D6042-555-B00	PIN-SHAPE TERMINAL, FEMALE	ピン ターミナル メス	(2)
5	SS-7110510-SP	SCREW 11/64-40 L=5	マルヒラネジ 11/64-40 L= 5	(1)
6	B3508-210-000	OIL TUBE HOLDER	ビニール パイプオサエ	(1)
7	B1508-210-000	SOLENOID	ヌノオサエ ソレノイド	(1)
8	B1515-210-000	SPRING	ヌノオサエソレノイドモトシバネ	(1)
9	SS-2111010-TP	SCREW 11/64-40 L=9.5	マルサラネジ 11/64-40 L=9.5	4
10	B1513-210-000	SPACER	ヌノオサエ マグネット スペーサ	4
11	B1520-212-000	SPACER B	ヌノ オサエ ソレノイド スペーサ (B)	1
12	RE-0320000-K0	SNAP RING 3.2	Eガタトメワ 3.2	2
13	B1504-210-000	CONNECTING SHAFT	ソレノイド レンケツシク	1
14	SS-6121610-TP	SCREW 3/16-28 L=15.5	ヒラネジ 3/16-28 L=15.5	1
15	B1704-210-000	LOWERING ARM B	オシサケウデ B	1
16	B1705-210-0A0	PRESSER ARM ASM. C	オシサケウデ C クミ	1
17	B1509-210-000	CONNECTING SCREW	オサエリンクシク	2
18	SD-0720332-SP	HINGE SCREW D= 7.24 H= 3.3	タンネジ D=7.24 H=3.3	2
19	B1707-210-000	SPRING	オシサケウデ モトシバネ	1
20	B1703-210-0A0	LOWERING ARM ASM. A	オシサケウデ A クミ	1
21	B1701-210-000	LOWERING SHAFT	オシサケ シテンシク	1
22	MAT-80116S00	SUSPENSION PIN	ヒタトリ ハネカケ ピン	1
23	SS-7151330-SP	SCREW 15/64-28 L=13.0	マルヒラネジ 15/64-28 L=13	1
24	B1506-210-000	SCREW STUD	オサエイタネジ	2
25	SS-2621540-SP	SCREW 3/16-32 L=15	マルサラネジ 3/16-32 L=15	1
26	B1511-210-000	CARRIER BAR UPPER PLATE	オサエウワイタ	1
27	SB-7120001-00	SLIDE BEARING	スライトシクウケ	1
28	NS-6110420-SP	NUT 11/64-40	ロツカクナツト 11/64-40	1
29	B1505-210-000	SCREW STUD	オサエイタ マワリトメ	1
30	B1502-210-0AB	FEED PLATE CARRIER BAR ASM.	オサエイタ ケツコウ	1
31	WP-0651056-SD	WASHER 6.5X11X1	ヒラサカネ 6.5X11X1	2
32	NS-6150310-SP	NUT 15/64-28	ロツカクナツト 15/64-28	2
33	B1501-210-000	LINK	オサエリンク	1
34	B1702-210-000	LOWERING ROD	オシサケロツト	1
35	NS-6150540-SP	NUT 15/64-28	ロツカクナツト 15/64-28	1
36	WP-0612516-SD	WASHER 6.1X15.2X2.5	ヒラサカネ 6.1X15.2X2.5	1

From the library of: Superior Sewing Machine & Supply LLC

5. PRESSER MECHANISN COMPONENTS

中押え関係

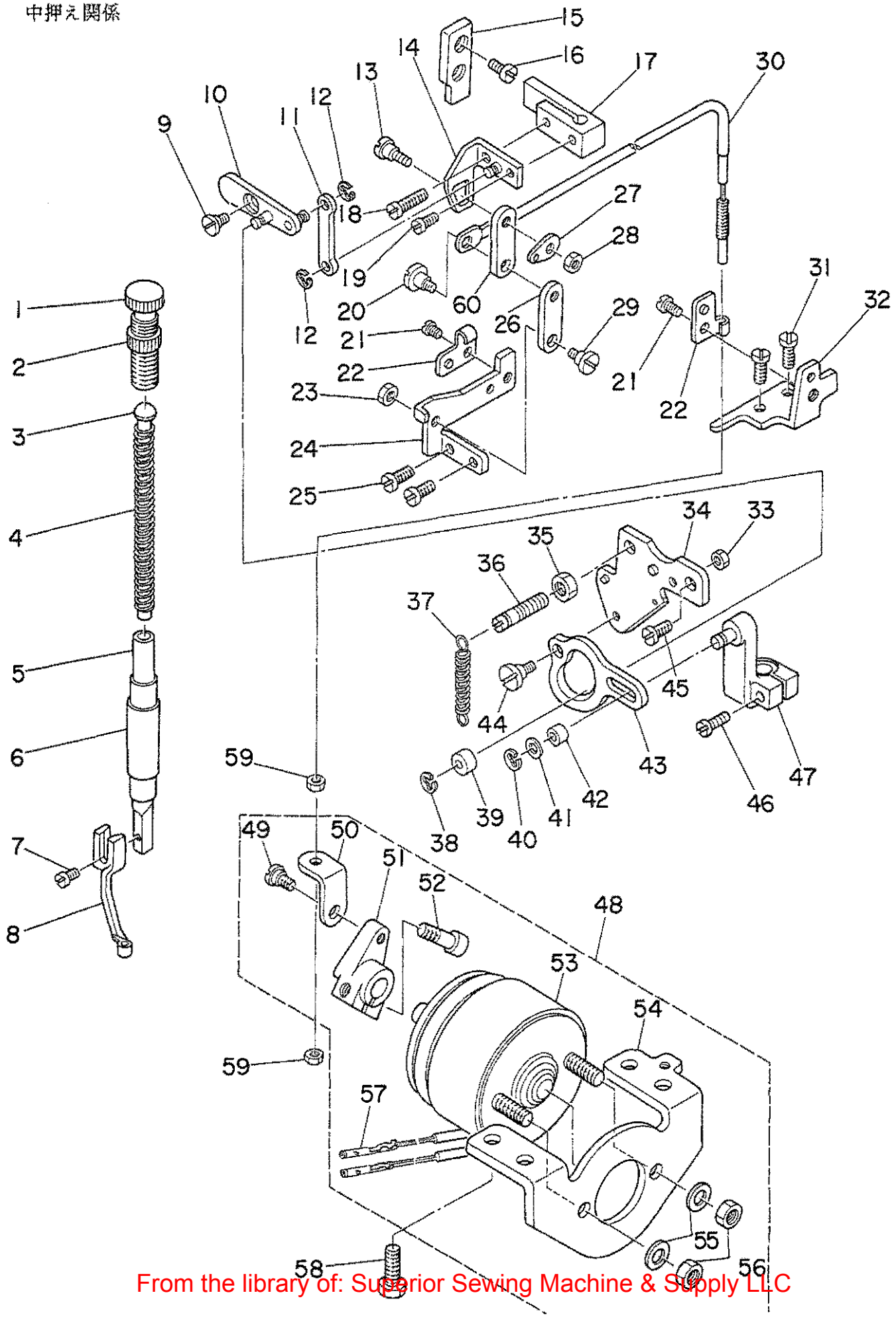

From the library of: Superior Sewing Machine & Supply LLC

1	B1509-227-000	PRESSER SPRING REGULATOR	ｵｻｴ ﾁｮｰｾﾂﾈｼﾞ	1
2	B1511-555-000	NUT 1/2-28	ｵｻｴﾁｮｰｾﾂﾈｼﾞ ﾅｯﾄ	1
3	B1510-227-000	PRESSER GUIDE BAR	ｵｻｴ ｱﾝﾅｲﾎﾞｰ	1
4	B1611-210-000	SPRING	ﾅｶｵｻｴﾊﾞﾈ	1
5	B1501-127-000	PRESSER BAR	ｵｻｴﾎﾞｰ	1
6	B1502-541-000	PRESSER BAR BUSHING, LOWER	ｵｻｴﾎﾞｰ ｼﾀﾒﾀﾙ	1
7	SS-7091110-SP	SCREW 9/64-40 L=10.5	ﾏﾙﾋﾗﾈｼﾞ 9/64-40 L=10.5	1
8	B1601-206-000	INTERMEDIATE PRESSER, A	ﾅｶｵｻｴ A	1
9	SD-0640191-TP	HINGE SCREW H=6.35 W=1.9	ﾀﾞﾝﾈｼﾞ H=6.35 W=1.9	1
10	B1603-210-0A0	PRESSER FOLLOW ARM ASM.	ﾅｶｵｻｴ ｼﾞｭｳﾄﾞｳｳﾃﾞ ｸﾐ	1
11	B1607-210-000	INTERMEDIATE PRESSER ROD	ﾅｶｵｻｴﾛｯﾄﾞ	1
12	RE-0320000-K0	SNAP RING 3.2	Eｶﾞﾀﾄﾒﾜ 3.2	2
13	SD-0600361-SP	HINGE SCREW	ﾀﾞﾝﾈｼﾞ	1
14	B1615-206-0A0	LINK GUIDE BRACKET ASM.	ﾅｶｵｻｴﾘﾝｸ ｶﾞｲﾄﾞｹｳｺﾞｳ	1
15	B1625-206-000	GUIDE PLATE	ﾅｶｵｻｴｱｹﾞ ｶﾞｲﾄﾞﾊﾞﾝ	1
16	SS-7110710-SP	SCREW 11/64-40 L=7	ﾏﾙﾋﾗﾈｼﾞ 11/64-40 L=7	2
17	B1507-552-000	PRESSER BAR GUIDE BRACKET	ｵｻｴﾎﾞｰﾀﾞｷ	1
18	SS-7111410-TP	SCREW 11/64-40 L=14	ﾏﾙﾋﾗﾈｼﾞ 11/64-40 L=14	1
19	SS-7090920-SP	SCREW 9/64-40 L= 8.5	ﾏﾙﾋﾗﾈｼﾞ 9/64-40 L=8.5	1
20	SD-0600411-TP	HINGE SCREW H=6 W=4.1	ﾀﾞﾝﾈｼﾞ H=6 W=4.1	1
21	SS-7110710-SP	SCREW 11/64-40 L=7	ﾏﾙﾋﾗﾈｼﾞ 11/64-40 L=7	2
22	B1622-210-000	WIRE PRESSER CLAMP	ﾅｶｵｻｴﾜｲﾔ ｸﾗﾝﾌﾟ	2
23	NS-6120310-SP	NUT 3/16-28	ﾛｯｶｸﾅｯﾄ 3/16-28	1
24	B1618-206-000	CONNECTING LINK PLATE	ﾅｶｵｻｴｱｹﾞ ﾘﾝｸ ｳｹｲﾀ	1
25	SS-7110910-TP	SCREW 11/64-40 L= 8.5	ﾏﾙﾋﾗﾈｼﾞ 11/64-40 L=8.5	2
26	B1616-210-000	SUSPENSION LINK	ﾅｶｵｻｴｱｹﾞ ﾘﾝｸ	1
27	B1617-210-000	SPRING SUSPENSION B	ﾅｶｵｻｴｱｹﾞ ﾊﾞﾈｶｹ B	1
28	NS-6120310-SP	NUT 3/16-28	ﾛｯｶｸﾅｯﾄ 3/16-28	1
29	SD-0600321-SP	HINGE SCREW D= 6 H= 3.2	ﾀﾞﾝﾈｼﾞ D=6 H=3.2	1
30	B1619-210-0A0	WIRE ASM.	ﾅｶｵｻｴ ﾜｲﾔ ｸﾐ	1
31	SS-7110910-TP	SCREW 11/64-40 L= 8.5	ﾏﾙﾋﾗﾈｼﾞ 11/64-40 L=8.5	2
32	B1627-210-000	WIRE SUPPORT BRACKET	ﾅｶｵｻｴﾜｲﾔ ｺﾃｲｲﾀ	1
33	NS-6120310-SP	NUT 3/16-28	ﾛｯｶｸﾅｯﾄ 3/16-28	1
34	B1610-210-0A0	CAM INSTALLING BASE ASM.	ﾅｶｵｻｴｶﾑ ｺﾃｲｲﾀ ｸﾐ	1
35	NS-6150430-SP	NUT 15/64-28	ﾛｯｶｸﾅｯﾄ 15/64-28	1
36	B1612-206-000	SUSPENSION SCREW	ﾅｶｵｻｴﾊﾞﾈｶｹ	1
37	B1626-210-000	SPRING	ﾅｶｵｻｴｱｹﾞ ﾊﾞﾈ	1
38	RE-0400000-K0	E-RING	Eｶﾞﾀﾄﾒﾜ 4	1
39	B1606-210-000	ROLLER	ﾅｶｵｻｴｺﾛ	1
40	RE-0320000-K0	SNAP RING 3.2	Eｶﾞﾀﾄﾒﾜ 3.2	1
41	WP-0451026-SH	WASHER	ﾋﾗｻﾞｶﾞﾈ	1
42	B1633-210-000	ROLLER	ﾅｶｵｻｴ ｸﾞﾄﾞｳｳﾃﾞ ｼﾞｸｺﾛ	1
43	B1609-210-000	CAM	ﾅｶｵｻｴｶﾑ	1
44	SD-0640391-TP	HINGE SCREW D= 6.35 H= 3.9	ﾀﾞﾝﾈｼﾞ D=6.35 H=3.9	1
45	SS-7150940-SP	SCREW 15/64-28 L=9	ﾏﾙﾋﾗﾈｼﾞ 15/64-28 L=9	1
46	SS-7091410-SP	SCREW 9/64-40 L=13.5	ﾏﾙﾋﾗﾈｼﾞ 9/64-40 L=13.5	1
47	B1602-206-0A0	PRESSER DRIVE ARM ASM.	ﾅｶｵｻｴ ｸﾄﾞｳｳﾃﾞ ｹﾂｺﾞｳ	1
48	B1628-210-0A0	SOLENOID ASM.	ﾅｶｵｻｴ ﾏｸﾞﾈｯﾄ ｸﾐ	1
49	SD-0640323-TP	HINGE SCREW D= 6.35 H= 3.2	ﾀﾞﾝﾈｼﾞ D=6.35 H=3.2	(1)
50	B1630-210-000	SOLENOID ARM PLATE	ﾅｶｵｻｴ ﾏｸﾞﾈｯﾄｳﾃﾞｲﾀ	(1)
51	B1629-210-000	SOLENOID ARM	ﾅｶｵｻｴ ﾏｸﾞﾈｯﾄｳﾃﾞ	(1)
52	SS-6151812-TP	SCREW 15/64-28 L=18	ﾛｯｶｸｱﾅﾎﾞﾙﾄ 15/64-28	(1)
53	B1628-210-000	SOLENOID	ﾅｶｵｻｴ ﾏｸﾞﾈｯﾄ	(1)
54	B1631-210-000	SOLENOID INSTALLING BRACKET	ﾅｶｵｻｴ ﾏｸﾞﾈｯﾄ ﾄﾘﾂｹｲﾀ	(1)
55	WP-0650876-SD	WASHER 6.5X13X0.8	ﾋﾗｻﾞｶﾞﾈ 6.5X13X0.8	(2)
56	NM-6060003-SC	NUT M6	ﾛｯｶｸﾅｯﾄ M6 3ｼｭ	(2)
57	D6042-555-B00	PIN-SHAPE TERMINAL, FEMALE	ﾋﾟﾝ ﾀｰﾐﾅﾙ ﾒｽ	(2)
58	SS-9151160-CP	SCREW 15/64-28 L=10.5	ﾛｯｶｸﾎﾞﾙﾄ 15/64-28 L=115	4
59	NS-6620310-SP	NUT 3/16-32	ﾛｯｶｸﾅｯﾄ 3/16-32	2
60	B1616-206-000	SUSPENSION LINK	ﾅｶｵｻｴ ｱｹﾞ ﾘﾝｸB	1

From the library of: Superior Sewing Machine & Supply LLC

6. SHUTTLE DRIVER SHAFT COMPONENTS
下軸関係

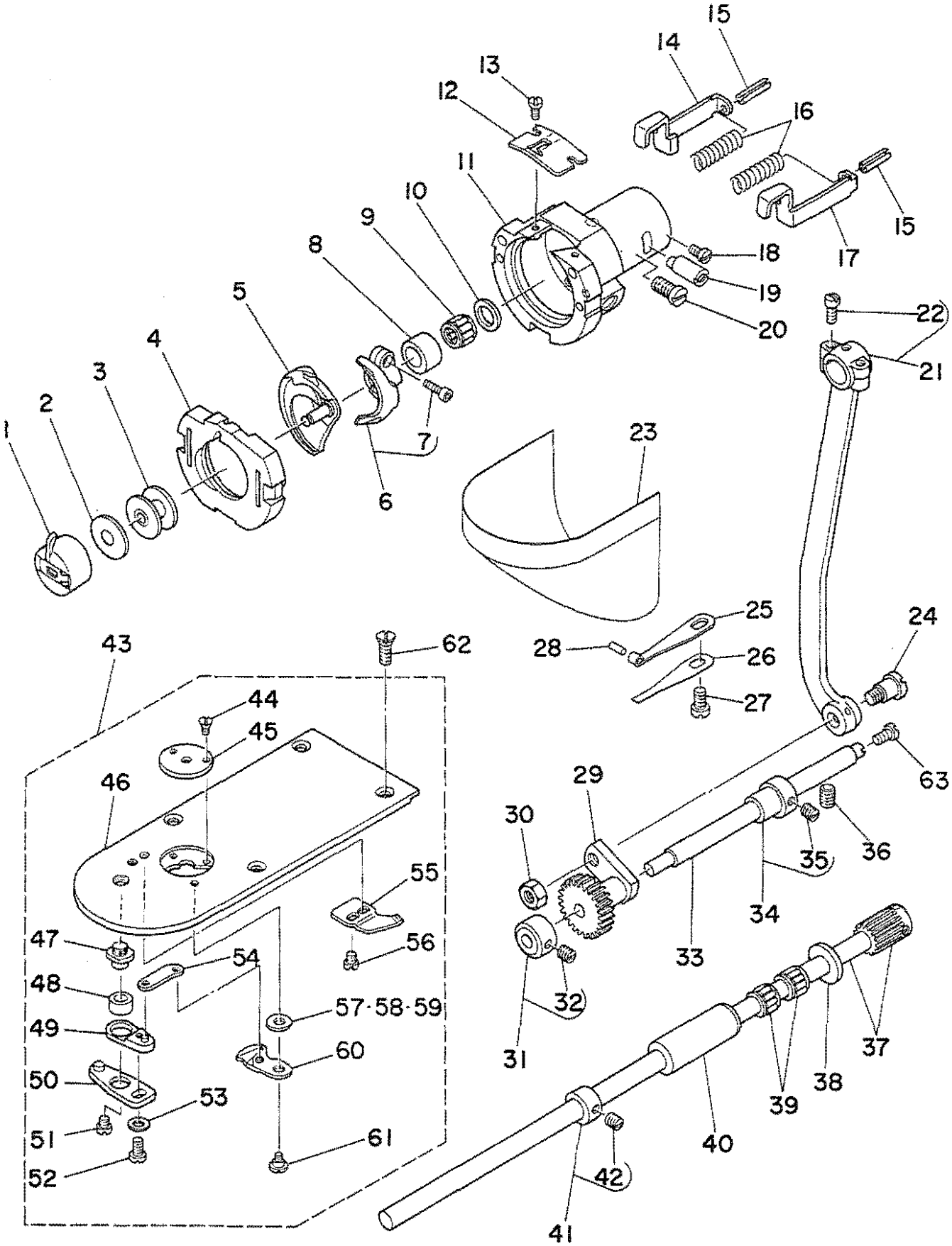

From the library of: Superior Sewing Machine & Supply LLC

1		B1828-205-0A0	BOBBIN CASE ASM.	ﾎﾞﾋﾞﾝｹｰｽ ｸﾐ	1
2		B1808-205-000	SPRING	ｹｳﾃﾝ ﾎﾞｳｼ ﾊﾞﾈ	1
3		B1805-205-000	BOBBIN	ﾎﾞﾋﾞﾝ	1
4		B1817-205-0A0	SHUTTLE RACE RING ASM.	ﾅｶｶﾞﾏ ｵｻｴ ｹﾂｺﾞｳ	1
5		B1818-205-000	SHUTTLE	ﾅｶｶﾞﾏ	1
6		B1812-205-000	SHUTTLE DRIVER	ﾄﾞﾗｲﾊﾞｰ	1
7		SS-6121212-TP	SCREW 3/16-28 L=12.0	ﾛｯｶｸｱﾅﾎﾞﾙﾄ 3/16-28 L=12	(1)
8		B1813-980-000	BUSHING	ｵｵｶﾞﾏ ﾆｰﾄﾞﾙｶﾞｲﾘﾝ	1
9	#01	B1411-804-B00	BEARING B	ﾊﾘ ｸﾄﾞｰﾚﾊﾞｰ ﾍﾞｱﾘﾝｸﾞ B	1
10		WP-0952916-SD	WASHER 9.5X14.8X2.9	ﾋﾗｻﾞｶﾞﾈ 9.5X14.8X2.9	1
11		B1814-980-000	SHUTTLE RACE	ｵｵｶﾞﾏ	1
12		B1815-980-000	SHUTTLE RECE SPRING	ｵｵｶﾞﾏ ｳﾜﾊﾞﾈ	1
13		SS-6060410-TP	SCREW 3/32-56 L= 3.5	ﾋﾗﾈｼﾞ 3/32-56 L=3.5	2
14		B1821-280-000	SHUTTLE RACE LATCH, LEFT	ﾅｶｶﾞﾏ ｵｻｴ ﾌｯｸ ﾋﾀﾞﾘ	1
15		PS-0250162-KH	SPRING PIN 2.5X16	ｽﾌﾟﾘﾝｸﾞﾋﾟﾝ 2.5X16	2
16		B1823-280-000	SPRING, FOR SHUTTLE RACE	ﾅｶｶﾞﾏ ｵｻｴ ﾊﾞﾈ	2
17		B1820-280-000	SHUTTLE RACE LATCH (RIGHT)	ﾅｶｶﾞﾏ ｵｻｴ ﾌｯｸ ﾐｷﾞ	1
18		SS-7110510-SP	SCREW 11/64-40 L=5	ﾏﾙﾋﾗﾈｼﾞ 11/64-40 L= 5	1
19		B1819-280-000	SHUTTLE RACE ADJUSTING SHAFT	ｵｵｶﾞﾏ ﾁｮｰｾｯｼﾞｸ	1
20		SS-6151220-SP	SCREW 15/64-28 L=11.5	ﾋﾗﾈｼﾞ 15/64-28 L=11.5	1
21		B1802-210-0A0	CRANK ROD ASM.	ｸﾗﾝｸﾛｯﾄ ｸﾐ	1
22		SS-7111110-TP	SCREW 11/64-40 L=10.5	ﾏﾙﾋﾗﾈｼﾞ 11/64-40 L=10.5	(2)
23		135-08551	CYLINDER ARM CAP ASM.	ｶﾏｶﾊﾞｰ ｸﾐ	1
24		SD-0801021-TP	HINGE SCREW D= 8 H=10.2	ﾀﾞﾝﾈｼﾞ D=8 H=10.2	1
25		135-08809	CYLINDER ARM CAP SPRING A	ｶﾏｶﾊﾞｰ ｵｻｴﾊﾞﾈ A	1
26		135-08908	CYLINDER ARM CAP SPRING B	ｶﾏｶﾊﾞｰ ｵｻｴﾊﾞﾈ B	1
27		SS-6111140-SP	SCREW 11/64-40 L=11	ﾋﾗﾈｼﾞ 11/64-40 L=11	1
28		135-08700	PIN	ｶﾏｶﾊﾞｰ ｵｻｴﾊﾞﾈﾋﾟﾝ	1
29		B1805-980-000	OSCILLATING ROCK SHAFT	ｵｵﾌﾘｺ	1
30		NS-6660430-SP	NUT 1/4-40	ﾛｯｶｸﾅｯﾄ 1/4-40	1
31		CS-079101A-SH	THRUST COLLAR ASM. D=7.94 W=10	ｽﾗｽﾄｳｹ D=7.94 W=10 ｸﾐ	1
32		SS-8110520-TP	SCREW 11/64-40 L= 4.5	ﾄﾒﾈｼﾞ 11/64-40 L=4.5	(2)
33		135-08205	OSCILLATING ROCK SHAFT PIN	ｵｵﾌﾘｺｼﾞｸ	1
34		B1804-280-0A0	THRUST COLLAR ASM.	ｵｵﾌﾘｺ ｽﾗｽﾄｶﾗｰﾀﾞｲ ｸﾐ	1
35		SS-8110520-TP	SCREW 11/64-40 L= 4.5	ﾄﾒﾈｼﾞ 11/64-40 L=4.5	(2)
36		SS-8150822-TP	SCREW 15/64-28 L=8	ﾄﾒﾈｼﾞ 15/64-28 L=8	1
37	#01	B1811-205-0AA	SHUTTLE DRIVER SHAFT ASM.	ｼﾓｼﾞｸ ﾊｸﾞﾙﾏ ｹﾂｺﾞｳ	1
38		B1808-980-000	THRUST WASHER	ｼﾀｼﾞｸ ｽﾗｽﾄﾜｯｼｬｰ	1
39	#01	B1411-804-B00	BEARING B	ﾊﾘ ｸﾄﾞｰﾚﾊﾞｰ ﾍﾞｱﾘﾝｸﾞ B	2
40		B1803-210-000	BUSHING, REAR	ｼﾀｼﾞｸ ｳｼﾛﾒﾀﾙ	1
41		CS-080081B-SH	THRUST COLLAR ASM. D=8.0 W=8	ｽﾗｽﾄｳｹ D=8 W=8 ｸﾐ	1
42		SS-8110520-TP	SCREW 11/64-40 L= 4.5	ﾄﾒﾈｼﾞ 11/64-40 L=4.5	(2)
43		B2425-210-0A0	NEEDLE PLATE ASM.	ﾊﾘｲﾀ ｸﾐ	1
44		SS-1060210-TP	SCREW 3/32-56 L=2.2	ｻﾗﾈｼﾞ 3/32-56 L=2.2	(2)
45		B2426-210-00A	NEEDLE PLATE NEEDLE HOLE GUIDE	ﾊﾘｱﾅｶﾞｲﾄ	(1)
46		B2425-210-000	NEEDLE PLATE	ﾊﾘｲﾀ	(1)
47		B2417-280-000	MOVING KNIFE DRIVING LEVER	ｲﾄｷﾘ ﾚﾊﾞｰｼﾞｸ	(1)
48		B2416-280-000	COLLAR	ｲﾄｷﾘ ﾚﾊﾞｰﾘﾝｸﾞ	(1)
49		B2415-280-0A0	MOVING KNIFE DRIVING LEVER ASM.	ｲﾄｷﾘ ﾚﾊﾞｰ (ｼｮｳ) ｸﾐ	(1)
50		B2414-280-0A0	MOVING KNIFE DRIVING LEVER ASM.	ｲﾄｷﾘ ﾚﾊﾞｰ (ﾀﾞｲ) ｸﾐ	(1)
51		SS-6110430-TP	SCREW 11/64-40 L= 4.0	ﾋﾗﾈｼﾞ 11/64-40 L=4	(1)
52		SS-7110740-TP	SCREW 11/64-40 L=7	ﾏﾙﾋﾗﾈｼﾞ 11/64-40 L=7	(1)
53		WP-0450846-SP	WASHER	ﾋﾗｻﾞｶﾞﾈ	(1)
54		B2418-280-000	MOVING KNIFE CONNECTING LINK	ﾄﾞｳﾒｽ ﾘﾝｸ	(1)
55		B2424-210-000	COUNTER KNIFE	ｺﾃｲﾒｽ	(1)
56		SS-7090410-SP	SCREW 9/64-40 L= 3.5	ﾏﾙﾋﾗﾈｼﾞ 9/64-40 L=3.5	(2)
57		B2423-280-00C	WASHER	ﾄﾞｰﾒｽ ｻﾞｶﾞﾈ C	(1)
58	#01	B2423-280-00A	WASHER FOR DRIVING KNIFE	ﾄﾞｰﾒｽ ｻﾞｶﾞﾈ A	(1)
59	#01	B2423-280-00B	WASHER	ﾄﾞｰﾒｽ ｻﾞｶﾞﾈ B	(1)
60		B2421-205-0A0	MOVING KNIFE ASM.	ﾄﾞｳﾒｽｹﾂｺﾞｳ ｸﾐ	(1)
61		SD-0600101-TP	HINGE SCREW	ﾀﾞﾝﾈｼﾞ	(1)
62		SS-1110640-TP	SCREW 11/64-40 L= 5.5	ｻﾗﾈｼﾞ 11/64-40 L=5.5	4
63		SS-6091510-SP	SCREW 9/64-40 L=15.0	ﾋﾗﾈｼﾞ 9/64-40 L=15	1

Note(注記) #01..... Selective part 選択部品

From the library of: Superior Sewing Machine & Supply LLC

7. WIPER & TENSION CONTROLLER COMPONENTS

ワイパー・糸調子関係

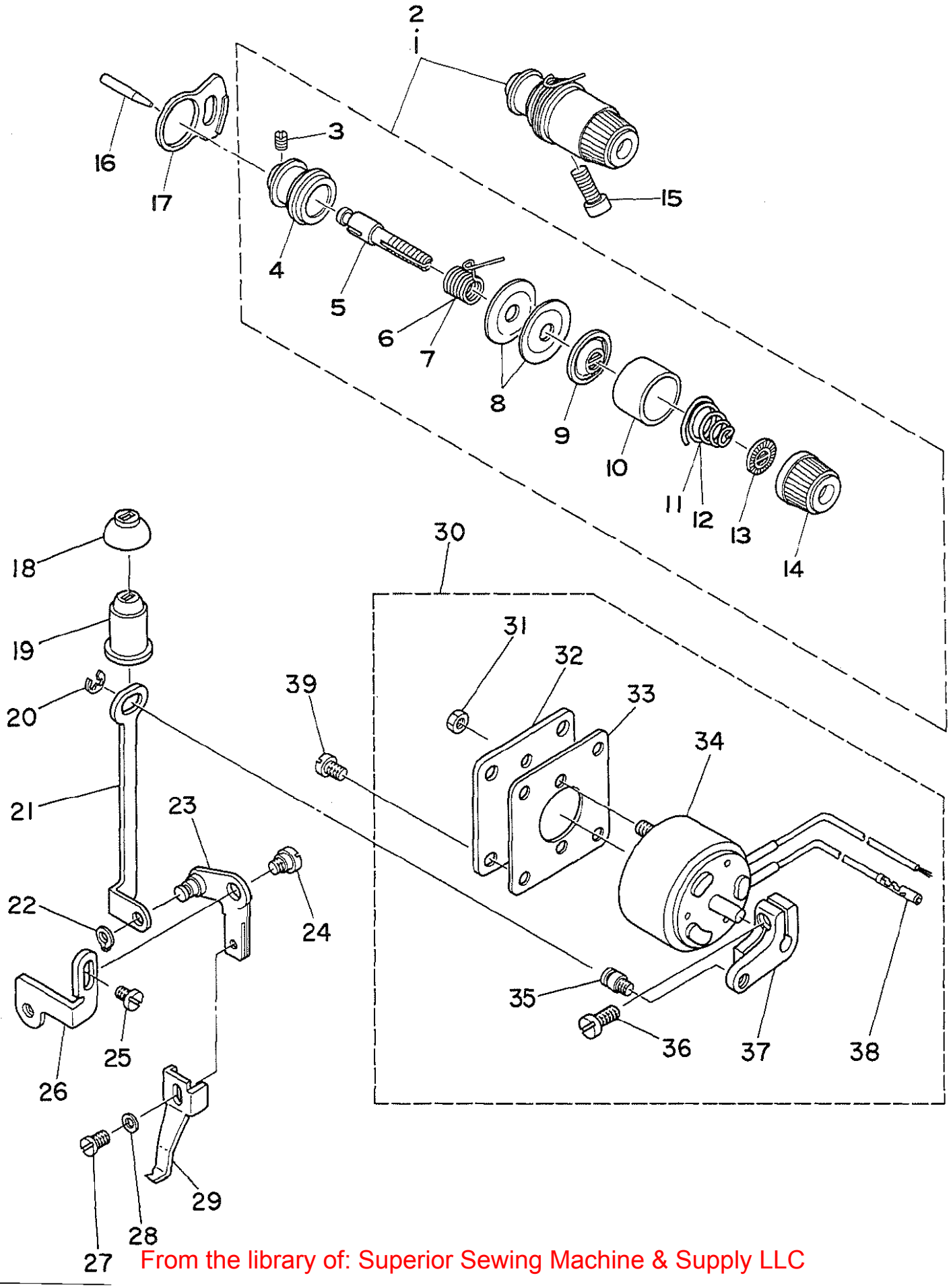

From the library of: Superior Sewing Machine & Supply LLC

1	#01	B2302-280-0A0	TENSION CONTROLLER, NO2 ASM.	ﾀﾞｲ2 ｲﾄﾁｮｰｼ ｸﾐ	1
2	#02	D2302-L4B-BA0	TENSION CONTROLLER. NO2 ASM.	ﾀﾞｲﾆ ｲﾁｮｰｼ ｸﾐ (ﾌﾄｲﾄ ﾖｰ)	1
3		SS-8090610-SP	SCREW 9/64-40 L=5.9	ﾄﾒﾈｼﾞ 9/64-40 L=5.9	(1)
4		B2313-280-000	TENSION POST SOCKET	ｲﾄﾁｮｰｼ ﾎﾞｳﾀﾞｲ	(1)
5		B2302-280-000	TENSION POST, NO.2	ﾀﾞｲ2 ｲﾄﾁｮｰｼﾎﾞｰ	(1)
6	#01	B3112-761-000	THREAD TAKE-UP SPRING	ｲﾄﾄﾘﾊﾞﾈ	(1)
7	#02	D3112-L4B-B00	TAKE-UP SPRING (HEAVY)	ｲﾄﾄﾘﾊﾞﾈ (ｷﾔﾝﾄﾝ)	(1)
8		B3126-012-000	TENSION DISC	ｲﾄﾁｮｰｼｻﾗ	(2)
9		B3132-552-000	TENSION DISC HOLDER	ｲﾄﾁｮｰｼ ｻﾗｵｻｴ	(1)
10		B3107-804-000	TENSION DISC PRESSER TUBE	ｲﾄﾁｮｰｼｻﾗ ｵｻｴ	(1)
11	#01	B3114-232-000	TENSION SPRING, NO.2	ｲﾄﾁｮｰｼ ﾊﾞﾈ	(1)
12	#02	B3129-053-000	TENSION SPRING	ｲﾄﾁｮｰｼﾊﾞﾈ	(1)
13		B3120-125-000	TENSION DISC STOPPER	ｲﾄﾁｮｰｼｻﾗ ｶｲﾃﾝﾄﾞﾒ	(1)
14		B3119-771-000	TENSION NUT	ｲﾄﾁｮｰｼﾅｯﾄ	(1)
15		SS-6151812-TP	SCREW 15/64-28 L=18	ﾛｯｶｸｱﾅﾎﾞﾙﾄ 15/64-28	1
16		B2303-280-000	TENSION RELEASE PIN	ｲﾄﾕﾙﾒ ﾋﾟﾝ	1
17		B2702-210-000	GUIDE PLATE	ｲﾄｷﾚｹﾝﾁｲﾀ ｶﾞｲﾄﾞ	1
18		B2109-210-000	OIL SHIELD CAP	ﾜｲﾊﾟｹﾝｹﾂｲﾀ ﾕﾎﾞｳｷｬｯﾌﾟ	1
19		135-09807	OIL SHIELD CAP	ﾜｲﾊﾟｰ ﾕﾎﾞｰｷｬｯﾌﾟ	1
20		RE-0500000-K0	E-RING	Eｶﾞﾀﾄﾒﾜ 5	1
21		B2103-210-000	WIPER CONNECTING PLATE	ﾜｲﾊﾟﾚﾝﾗｸｲﾀ	1
22		RC-0470611-KP	RETAINING RING 4.7	Cｶﾞﾀﾄﾒﾜ 4.7	1
23		B2106-210-0A0	WIPER INSTALLING PLATE ASM.	ﾜｲﾊﾟﾀﾞｲ ｸﾐ	1
24		SD-0640211-SP	HINGE SCREW D= 6.35 H= 2.1	ﾀﾞﾝﾈｼﾞ D=6.35 H=2.1	1
25		SS-7110840-SP	SCREW 11/64-40 L=7.8	ﾏﾙﾋﾗﾈｼﾞ 11/64-40 L=7.8	1
26		B2108-210-000	WIPER INSTALLING PLATE	ﾜｲﾊﾟﾀﾞｲｲﾀ	1
27		SS-6090630-TP	SCREW 9/64-40 L=6	ﾋﾗﾈｼﾞ 9/64-40 6=6	1
28		WP-0371016-SD	WASHER 3.7X8X1	ﾋﾗｻﾞｶﾞﾈ 3.7X8X1	1
29		B2107-210-000	WIPER	ﾜｲﾊﾟ	1
30		B2101-210-0A0	SOLENOID ASM.	ﾜｲﾊﾟﾏｸﾈｯﾄ ｸﾐ	1
31		NM-6040003-SC	NUT	ﾛｯｶｸﾅｯﾄ M4X0.7 3ｼｭ	(2)
32		B2104-210-000	SOLENOID INSTALLING PLATE	ﾜｲﾊﾟﾏｸﾞﾈｯﾄ ﾄﾘﾂｹｲﾀ	(1)
33		B2105-210-000	GASKET	ﾜｲﾊﾟﾄﾘﾂｹ ﾊﾟｯｷﾝ	(1)
34		B2101-210-000	SOLENOID	ﾜｲﾊﾟﾏｸﾞﾈｯﾄ	(1)
35		B3416-552-000	CONNECTING ROD HINGE SCREW	ﾋｻﾞｱｹﾞ ﾖｺﾎﾞｰ ﾀﾞﾝﾈｼﾞ	(1)
36		SS-6621220-SP	SCREW 3/16-32 L=12	ﾋﾗﾈｼﾞ 3/16-32 L=12	(1)
37		B2102-210-000	WIPER ARM	ﾜｲﾊﾟｳﾃﾞ	(1)
38		D6042-555-B00	PIN-SHAPE TERMINAL, FEMALE	ﾋﾟﾝ ﾀｰﾐﾅﾙ ﾒｽ	(1)
39		SS-7110710-SP	SCREW 11/64-40 L=7	ﾏﾙﾋﾗﾈｼﾞ 11/64-40 L=7	4

Note(注記) #01..... For AMS-220BS-5000Z AMS-220BS-5000Z用

#02..... For AMS-220BH-5000Z AMS-220BH-5000Z用

From the library of: Superior Sewing Machine & Supply LLC

8. TENSION RELEASE COMPONENTS

糸ゆるめ関係

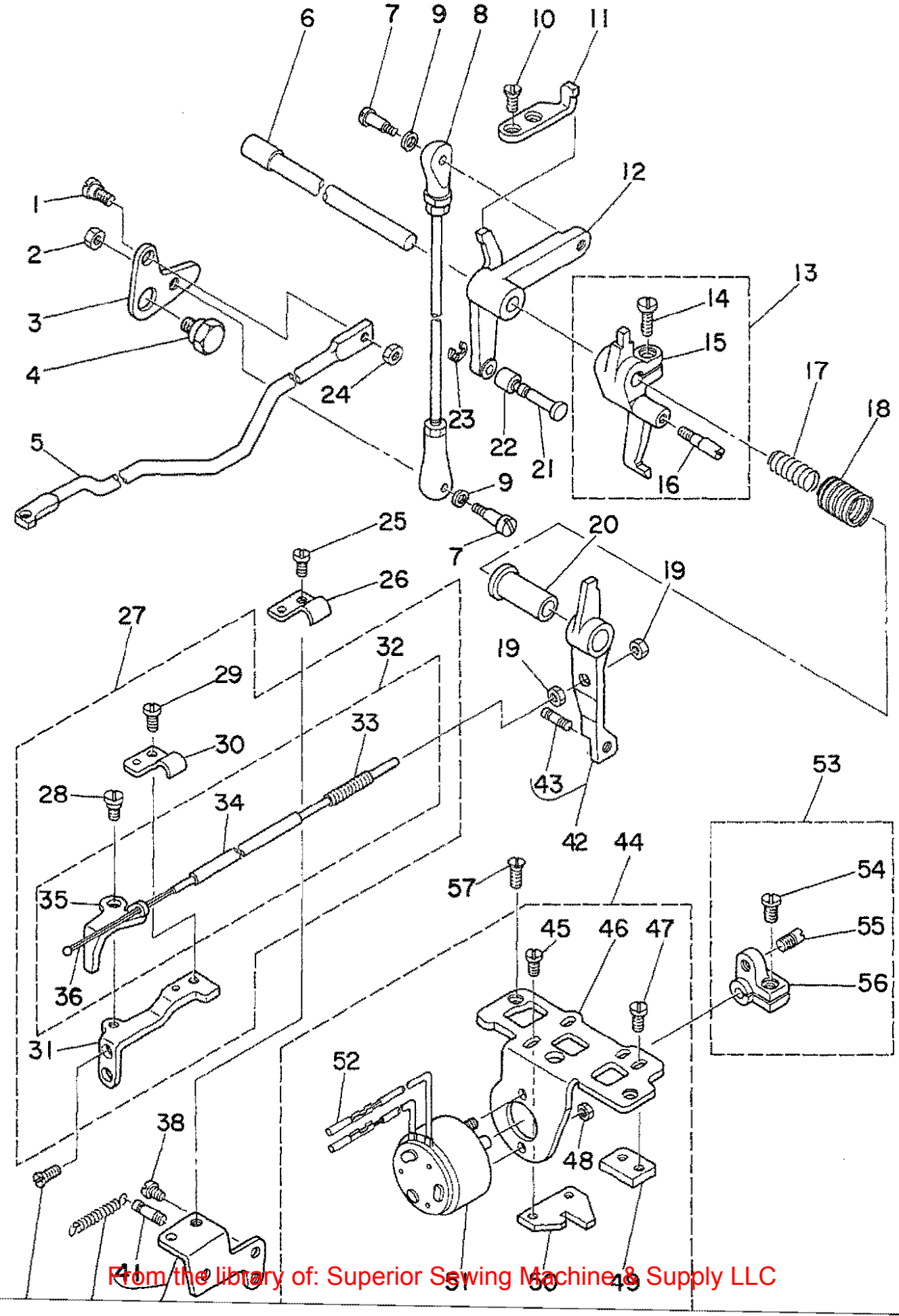

From the library of: Superior Sewing Machine & Supply LLC

1	SD-0650305-TP	HINGE SCREW D= 6.5 H= 3	ﾀﾞﾝﾈｼﾞ D=6.5 H=3	1
2	NS-6110430-SP	NUT 11/64-40	ﾛｯｶｸﾅｯﾄ 11/64-40	1
3	B2411-210-000	THREAD TRIMMER LINK	ｲﾄｷﾘ ﾘﾝｸ	1
4	SD-1100301-TP	HINGE SCREW H=11 W=3	ﾀﾞﾝﾈｼﾞ H=11 W=3	1
5	B2413-210-000	KNIFE DRIVING BAR	ｲﾄｷﾘ ﾚﾝｹﾂﾎﾞｳ	1
6	B2408-210-000	CAM SHAFT	ｲﾄｷﾘ ｶﾑｼﾞｸ	1
7	SD-0500803-TP	HINGE SCREW D=5 H=8	ﾀﾞﾝﾈｼﾞ D=5 H=8	2
8	B2407-210-000	CONNECTING ROD	ｲﾄｷﾘ ﾚﾝｹﾂﾛｯﾄﾞ	1
9	WP-0501016-SD	WASHER 5X10.5X1	ﾋﾗｻﾞｶﾞﾈ 5X10.5X1	2
10	SS-2110920-TP	SCREW 11/64-40 L=8.5	ﾏﾙｻﾗﾈｼﾞ 11/64-40 L=8.5	2
11	B2412-210-000	STOPPER	ｼﾞﾕｳﾄﾞｳｼ ｽﾄｯﾊﾟ	1
12	B2404-210-000	CAM INSTALLING LINK	ｶﾑｼﾞﾕﾄﾞｳｼ	1
13	B2301-210-0A0	TENSION RELEASE ARM ASM.	ｲﾄﾕﾙﾒｼﾞｸｳﾃﾞ ｸﾐ	1
14	SS-6121220-TP	SCREW 3/16-28 L=11.5	ﾋﾗﾈｼﾞ 3/16-28 L=11.5	(1)
15	B2301-210-000	TENSION RELEASE ARM	ｲﾄﾕﾙﾒｼﾞｸｳﾃﾞ	(1)
16	B2302-210-000	TENSION RELEASE SHAFT	ｲﾄﾕﾙﾒｼﾞｸ	(1)
17	B2415-210-000	SPRING, SMALL	ｲﾄｷﾘ ﾓﾄﾞｼﾊﾞﾈ (ｼｮｳ)	1
18	B2414-210-000	SPRING, LARGE	ｲﾄｷﾘ ﾓﾄﾞｼﾊﾞﾈ (ﾀﾞｲ)	1
19	NS-6620310-SP	NUT 3/16-32	ﾛｯｶｸﾅｯﾄ 3/16-32	1
20	B2305-210-000	BUSHING	ｲﾄﾕﾙﾒﾀﾙ	1
21	B2405-210-000	SHAFT	ｲﾄｷﾘ ｺﾛｼﾞｸ	1
22	B2406-210-000	CAM ROLLER	ｶﾑﾛｰﾗ	1
23	D2430-555-B00	SNAP RING	ｶﾑﾛｰﾗ ｼﾞｸ Cﾘﾝｸﾞ	1
24	NS-6120310-SP	NUT 3/16-28	ﾛｯｶｸﾅｯﾄ 3/16-28	1
25	SS-7110710-SP	SCREW 11/64-40 L=7	ﾏﾙﾋﾗﾈｼﾞ 11/64-40 L=7	1
26	B1622-210-000	WIRE PRESSER CLAMP	ﾅｶｵｻｴﾜｲﾔ ｸﾗﾝﾌﾟ	1
27	B2306-210-0A0	TENSION RELEASE LIFTER ASM.	ｲﾄﾕﾙﾒﾚﾊﾞｰ ｸﾐ	1
28	SD-0640321-SP	HINGE SCREW D= 6.35 H= 3.2	ﾀﾞﾝﾈｼﾞ D=6.35 H=3.2	(1)
29	SS-7110710-SP	SCREW 11/64-40 L=7	ﾏﾙﾋﾗﾈｼﾞ 11/64-40 L=7	(1)
30	B1622-210-000	WIRE PRESSER CLAMP	ﾅｶｵｻｴﾜｲﾔ ｸﾗﾝﾌﾟ	(1)
31	B2307-210-000	LIFTER INSTALLING BASE	ｲﾄﾕﾙﾒﾚﾊﾞｰｽﾃｰ	(1)
32	B2306-210-0B0	TENSION RELEASE LIFTER ASM.	ｲﾄﾕﾙﾒﾚﾊﾞｰ ｸﾐ	(1)
33	D3159-555-B00	SET SCREW	ﾜｲﾔｰ ｾｯﾄﾈｼﾞ	(1)
34	B2309-210-000	WIRE TUBE	ｲﾄﾕﾙﾒﾜｲﾔﾁｭｰﾌﾞ	(1)
35	B2306-210-000	TENSION RELEASE LIFTER	ｲﾄﾕﾙﾒﾚﾊﾞｰ	(1)
36	B2308-210-000	WIRE	ｲﾄﾕﾙﾒﾜｲﾔ	(1)
37	SS-2090820-TP	SCREW 9/64-40 L=8	ﾏﾙｻﾗﾈｼﾞ 9/64-40 L=8	2
38	SS-7110910-TP	SCREW 11/64-40 L= 8.5	ﾏﾙﾋﾗﾈｼﾞ 11/64-40 L=8.5	2
39	135-25001	SPRING	ｵｻｴｱｹﾞﾚﾊﾞｰ ｶｴｼﾊﾞﾈ	1
40	B2315-210-0A0	WIRE FIX BRACKET ASM.	ｲﾄﾕﾙﾒﾜｲﾔ ｺﾃｲﾀﾞｲ ｸﾐ	1
41	MAT-80116S00	SUSPENSION PIN	ﾋﾀﾞﾄﾘ ﾊﾞﾈｶｹ ﾋﾟﾝ	(1)
42	B2304-210-0A0	TENSION RELEASE ARM ASM.	ｲﾄﾕﾙﾒｳﾃﾞ ｸﾐ	1
43	MAT-80116S00	SUSPENSION PIN	ﾋﾀﾞﾄﾘ ﾊﾞﾈｶｹ ﾋﾟﾝ	(1)
44	B2402-210-0A0	SOLENOID INSTALLING BASE ASM.	ｲﾄｷﾘ ﾄﾘﾂｹﾀﾞｲ ｸﾐ	1
45	SS-7110840-SP	SCREW 11/64-40 L=7.8	ﾏﾙﾋﾗﾈｼﾞ 11/64-40 L=7.8	(2)
46	B2402-210-000	SOLENOID INSTALLING BASE	ｲﾄｷﾘ ﾄﾘﾂｹﾀﾞｲ	(1)
47	SS-7110840-SP	SCREW 11/64-40 L=7.8	ﾏﾙﾋﾗﾈｼﾞ 11/64-40 L=7.8	(2)
48	NW-6040003-SC	NUT	ﾛｯｶｸﾅｯﾄ M4X0.7 3ｼｭ	(2)
49	B2311-210-000	STOPPER	ｲﾄﾕﾙﾒｳﾃﾞ ｽﾄｯﾊﾟ	(1)
50	B2310-210-000	TENSION RELEASE ARM PLATE	ｲﾄﾕﾙﾒｼﾞｸｳﾃﾞ ｺﾃｲｲﾀ	(1)
51	B2403-210-000	SOLENOID	ｲﾄｷﾘ ﾏｸﾞﾈｯﾄ	(1)
52	D6042-555-B00	PIN-SHAPE TERMINAL, FEMALE	ﾋﾟﾝ ﾀｰﾐﾅﾙ ﾒｽ	(2)
53	B2409-210-0A0	SOLENOID ARM ASM.	ｲﾄｷﾘ ﾏｸﾞﾈｯﾄｳﾃﾞ ｸﾐ	1
54	SS-6121220-TP	SCREW 3/16-28 L=11.5	ﾋﾗﾈｼﾞ 3/16-28 L=11.5	(1)
55	B2410-210-000	PIN	ｲﾄｷﾘ ﾏｸﾞﾈｯﾄｳﾃﾞﾋﾟﾝ	(1)
56	B2409-210-000	SOLENOID ARM	ｲﾄｷﾘ ﾏｸﾞﾈｯﾄｳﾃﾞ	(1)
57	SS-2110920-TP	SCREW 11/64-40 L=8.5	ﾏﾙｻﾗﾈｼﾞ 11/64-40 L=8.5	2

From the library of: Superior Sewing Machine & Supply LLC

9. X,Y DRIVE COMPONENTS

X，Y 駆動関係

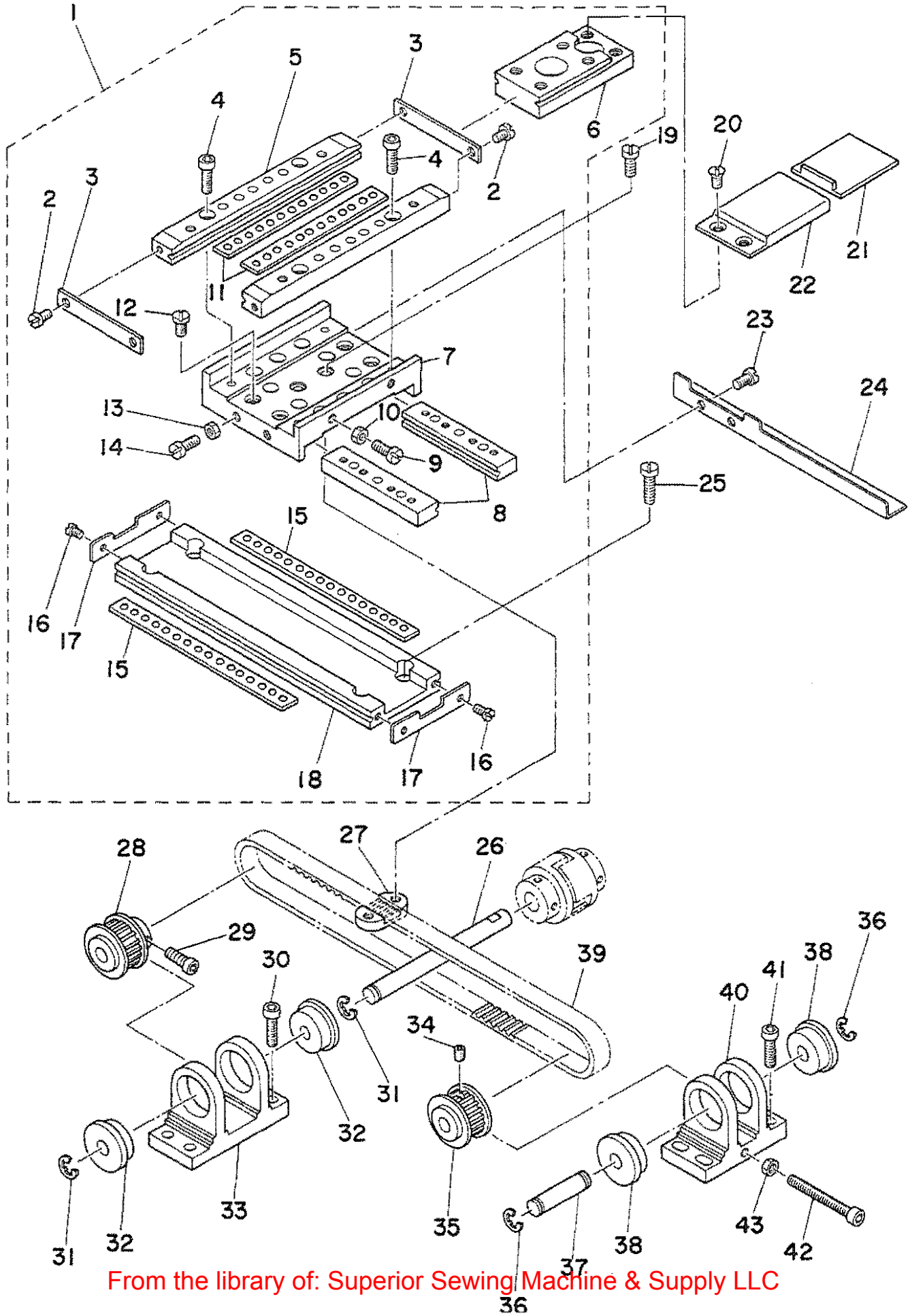

From the library of: Superior Sewing Machine & Supply LLC

1	B2501-210-0A0	X-Y TABLE ASM.	X-Y ﾃｰﾌﾞﾙ ｸﾐ	1
2	SS-6090620-SP	SCREW 9/64-40 L=6	ﾋﾗﾈｼﾞ 9/64-40 L=6	(4)
3	B2522-210-000	Y STOPPER	Yｽﾄｯﾊﾟ	(2)
4	SM-6041402-TP	SCREW M4 L=14	ﾛｯｶｸｱﾅﾎﾞﾙﾄ M4	(4)
5	B2520-210-000	Y FIXED RACE	Yｺﾃｲﾚｰｽ	(2)
6	B2519-210-000	Y REMOVAL RACE	Yｲﾄﾞｳﾚｰｽ	(1)
7	B2502-210-000	RACE TABLE	ﾚｰｽﾀﾞｲ	(1)
8	B2503-210-000	X REMOVAL RACE	Xｲﾄﾞｳﾚｰｽ	(2)
9	SS-9111020-TP	SCREW 11/64-40 L=10	ﾛｯｶｸﾎﾞﾙﾄ 11/64-40 L=10	(2)
10	NS-6110310-SP	NUT 11/64-40	ﾛｯｶｸﾅｯﾄ 11/64-40	(2)
11	B2521-210-000	Y BALL GAUGE	Yﾎﾞｰﾙｹﾞｰｼﾞ	(2)
12	SS-7110910-TP	SCREW 11/64-40 L= 8.5	ﾏﾙﾋﾗﾈｼﾞ 11/64-40 L=8.5	(4)
13	NS-6110310-SP	NUT 11/64-40	ﾛｯｶｸﾅｯﾄ 11/64-40	(2)
14	SS-9111020-TP	SCREW 11/64-40 L=10	ﾛｯｶｸﾎﾞﾙﾄ 11/64-40 L=10	(2)
15	B2508-210-000	X BALL GAUGE	Xﾎﾞｰﾙｹﾞｰｼﾞ	(2)
16	SS-6090620-SP	SCREW 9/64-40 L=6	ﾋﾗﾈｼﾞ 9/64-40 L=6	(4)
17	B2507-210-000	X STOPPER	Xｽﾄｯﾊﾟ	(2)
18	B2501-210-000	X FIXED RACE	Xｺﾃｲﾚｰｽ	(1)
19	SS-6110610-TP	SCREW 11/64-40 L=6	ﾋﾗﾈｼﾞ 11/64-40 L=6	2
20	SS-1110840-SP	SCREW 11/64-40 L=8	ﾋﾗﾈｼﾞ 11/64-40 L=8	2
21	B1123-210-000	Y DRIVE COVER	Yｲﾄﾞｳｶﾊﾞｰ	1
22	B1124-210-000	Y FIXED COVER	Yｺﾃｲｶﾊﾞｰ	1
23	SM-6040552-TP	SCREW M4 L=4.5	ﾛｯｶｸｱﾅﾎﾞﾙﾄ M4 L=4.5	2
24	B4007-210-000	X SLIT PLATE	Xﾎｳｺｳ ｽﾘｯﾄｲﾀ	1
25	SS-6121210-SP	SCREW 3/16-28 L=12	ﾋﾗﾈｼﾞ 3/16-28 L=9	4
26	B2506-210-000	X DRIVE SHAFT	Xｸﾄﾞｳｼﾞｸ	1
27	B2509-210-000	X BELT RECEIVER	Xﾍﾞﾙﾄｵｻｴ	1
28	B2513-210-000	SPROCKET WHEEL	ｸﾄﾞｳ ｽﾌﾟﾛｹｯﾄ	1
29	SM-6040602-TP	SCREW M4 L=6	ﾛｯｶｸｱﾅﾎﾞﾙﾄ M4X0.7 L=6	2
30	SM-6051602-TP	SCREW M5X0.8 L=16	ﾛｯｶｸｱﾅﾎﾞﾙﾄ M5X0.8 L=16	4
31	RE-0600000-K0	E-RING	Eｶﾞﾀﾄﾒﾜ 6	2
32	SB-1080005-00	RADIAL BEARING	ﾗｼﾞｱﾙｼﾞｸｳｹ	2
33	B2504-210-000	BRACKET, A	Xｼﾞｸ ﾌﾞﾗｹｯﾄ A	1
34	SM-8040602-TP	SCREW M4X0.7 L=6	ﾄﾒﾈｼﾞ	2
35	B2514-210-000	SPROCKET WHEEL	ｼﾞﾕｳﾄﾞｳ ｽﾌﾟﾛｹｯﾄ	1
36	RE-0600000-KP	SNAP RING 6	Eｶﾞﾀﾄﾒﾜ 6	2
37	B2515-210-000	X BRACKET SHAFT	Xﾌﾞﾗｹｯﾄｼﾞｸ	1
38	SB-1080005-00	RADIAL BEARING	ﾗｼﾞｱﾙｼﾞｸｳｹ	2
39	B2512-210-000	X TIMING BELT	Xﾀｲﾐﾝｸﾞﾍﾞﾙﾄ	1
40	B2505-210-000	BRACKET, B	Xｼﾞｸ ﾌﾞﾗｹｯﾄ B	1
41	SM-6051602-TP	SCREW M5X0.8 L=16	ﾛｯｶｸｱﾅﾎﾞﾙﾄ M5X0.8 L=16	4
42	SM-6054002-TN	SCREW M5X0.8 L=40	ﾛｯｶｸｱﾅﾎﾞﾙﾄ M5X0.8 L=40	1
43	NM-6050001-SP	NUT M5	ﾛｯｶｸﾅｯﾄ M5X0.8 1ｼｭ	1

From the library of: Superior Sewing Machine & Supply LLC

10. X,Y STEPPING MOTER COMPONENTS

X，Y　ステッピングモーター関係

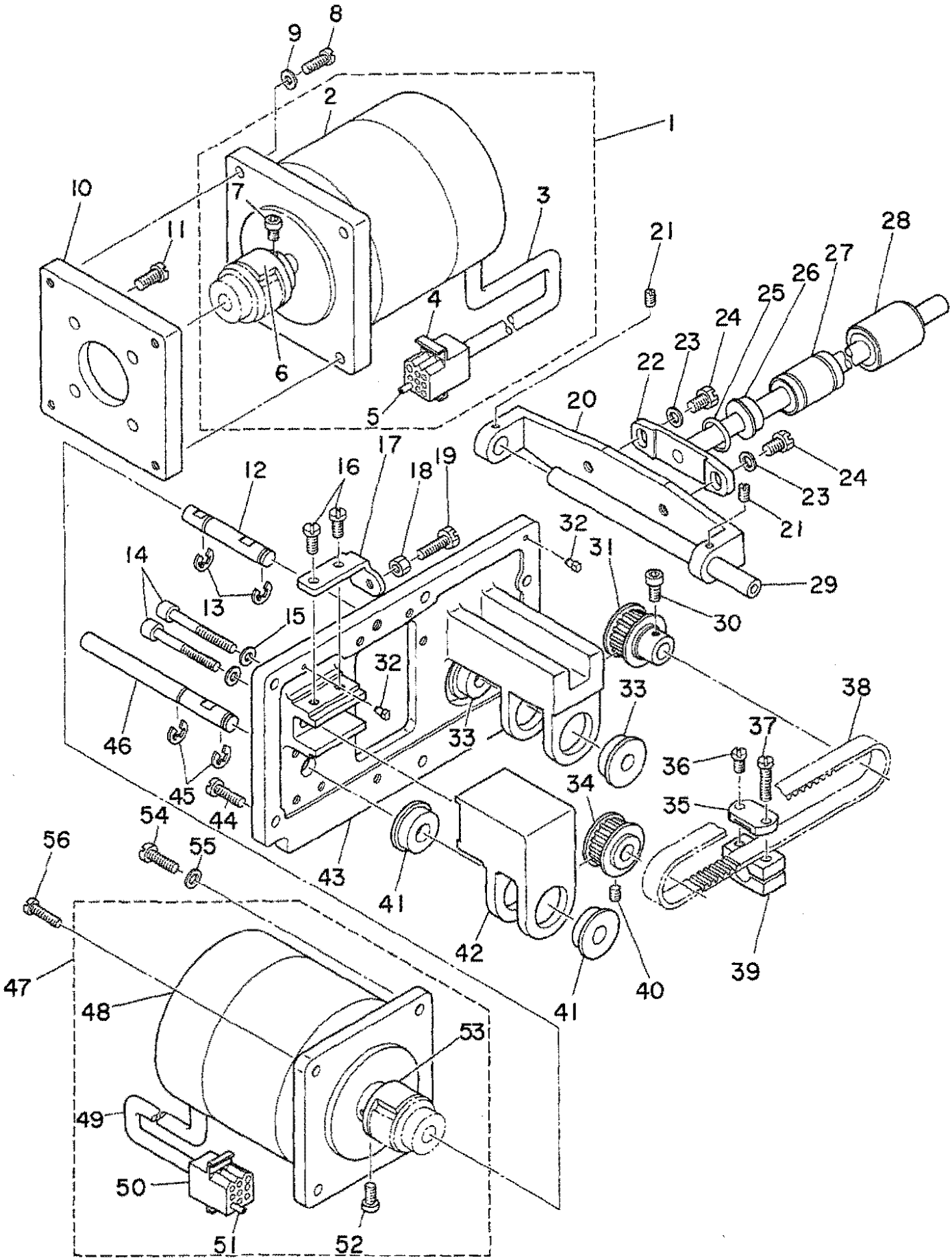

From the library of: Superior Sewing Machine & Supply LLC

1	B2529-210-0BB	STEPPING MOTOR ASM.	Yｵｸﾘ ｽﾃｯﾋﾟﾝｸﾞﾓｰﾀｰ(ｸﾐ)	1
2	B2529-210-000	STEPPING MOTOR	ｵｸﾘ ｽﾃｯﾋﾟﾝｸﾞ ﾓｰﾀ	(1)
3	E8760-452-M00	TUBE	ｽﾐﾁｭｰﾌﾞ	(0.3)
4	D6028-555-B0B	9-POLE RECEPTACLE, WHITE	9ｷﾖｸ ﾅｲﾛﾝ ﾚｾﾌﾟﾀｸﾙ(ｼﾛ)	(1)
5	D6042-555-B00	PIN-SHAPE TERMINAL, FEMALE	ﾋﾟﾝ ﾀｰﾐﾅﾙ ﾒｽ	(5)
6	B2516-210-000	COUPLING	ｶｯﾌﾟﾘﾝｸﾞ	(1)
7	SM-6040602-TP	SCREW M4 L=6	ﾛｯｶｸｱﾅﾎﾞﾙﾄ M4X0.7 L=6	(2)
8	SS-7121610-SP	SCREW 3/16-28 L=15.5	ﾏﾙﾋﾗﾈｼﾞ 3/16-28 L=15.5	4
9	WP-0501016-SD	WASHER 5X10.5X1	ﾋﾗｻﾞｶﾞﾈ 5X10.5X1	4
10	B2531-210-000	MOTOR BACE	ﾓｰﾀ ﾄﾘﾂｹﾀﾞｲ	1
11	SS-7151210-SP	SCREW 15/64-28 L=12	ﾏﾙﾋﾗﾈｼﾞ 15/64-28 L=12	4
12	B2523-210-000	Y DRIVE SHAFT	Yｸﾄﾞｳｼﾞｸ	1
13	RE-0600000-K0	E-RING	Eｶﾞﾀﾄﾒﾜ 6	2
14	SM-6054002-TN	SCREW M5X0.8 L=40	ﾛｯｶｸｱﾅﾎﾞﾙﾄ M5X0.8 L=40	2
15	WP-0550800-SP	WASHER 5.5X10X0.8	ﾋﾗｻﾞｶﾞﾈ 5.5X10X0.8	2
16	SS-7110910-SP	SCREW	ﾏﾙﾋﾗﾈｼﾞ 11/64-40 L=8.5	2
17	B2530-210-000	ADJUSTING PLATE	Yｼﾞｸﾌﾟﾗｹｯﾄ ﾁｮｳｾﾂﾀﾞｲ	1
18	NS-6110420-SP	NUT 11/64-40	ﾛｯｶｸﾅｯﾄ 11/64-40	1
19	SS-9111510-SP	SCREW 11/64-40 L=15	ﾛｯｶｸﾎﾞﾙﾄ 11/64-40 L=15	1
20	B2511-210-000	X GUIDE SHAFT BRACKET	Xｶﾞｲﾄﾞｼﾞｸ ｻｻｴ	1
21	SS-8110422-TP	SCREW 11/64-40 L=4	ﾄﾒﾈｼﾞ 11/64-40 L=4	2
22	B2524-210-0A0	Y REMOVAL SHAFT ASM.	Yｲﾄﾞｳｼﾞｸ ｸﾐ	1
23	WP-0621016-SD	WASHER 6.2X13X1	ﾋﾗｻﾞｶﾞﾈ 6.2X13X1	2
24	SS-9150710-TP	BOLT 15/64-28 L=6.5	ﾛｯｶｸﾎﾞﾙﾄ 15/64-28 L=6.5	2
25	RO-0981901-00	RUBBER RING	Oﾘﾝｸﾞ	1
26	B2534-210-000	BUSHING	Yｲﾄﾞｳｼﾞﾕｸ Oﾘﾝｸﾞﾒﾀﾙ	1
27	SB-7100002-00	SLIDE BEARING	ｽﾗｲﾄﾞｼﾞｸｳｹ	1
28	B2532-210-0A0	BUSHING ASM. B	ﾘﾆｱﾌﾞｯｼﾝｸﾞ B ｸﾐ	1
29	B2510-210-000	X GUIDE SHAFT	Xｶﾞｲﾄﾞｼﾞｸ	1
30	SM-8040602-TP	SCREW M4X0.7 L=6	ﾄﾒﾈｼﾞ	2
31	B2513-210-000	SPROCKET WHEEL	ｸﾄﾞｳ ｽﾌﾟﾛｹｯﾄ	1
32	B1816-280-000	GUIDE PIN	ﾅｶｶﾞﾏ ｵｻｴ ｶﾞｲﾄﾞﾋﾟﾝ	2
33	SB-1080005-00	RADIAL BEARING	ﾗｼﾞｱﾙｼﾞｸｳｹ	2
34	B2514-210-000	SPROCKET WHEEL	ｼﾞﾕｳﾄﾞｳ ｽﾌﾟﾛｹｯﾄ	1
35	B2526-210-000	Y BELT RECEIVER	Yﾍﾞﾙﾄｵｻｴ	1
36	SS-7110910-TP	SCREW 11/64-40 L= 8.5	ﾏﾙﾋﾗﾈｼﾞ 11/64-40 L=8.5	1
37	SS-7111810-TP	SCREW 11/64-40 L=18	ﾏﾙﾋﾗﾈｼﾞ 11/64-40 L=18	1
38	B2528-210-000	Y TIMING BELT	Yﾀｲﾐﾝｸﾞﾍﾞﾙﾄ	1
39	B2536-210-000	Y BELT BASE	Yﾍﾞﾙﾄﾀﾞｲ	1
40	SM-6040802-TR	SCREW M4X0.7 L=8	ﾛｯｶｸｱﾅﾎﾞﾙﾄ M4X0.7 L=8	2
41	SB-1080005-00	RADIAL BEARING	ﾗｼﾞｱﾙｼﾞｸｳｹ	2
42	B2518-210-000	BRACKET	Yｼﾞｸ ﾌﾞﾗｹｯﾄ	1
43	B2517-210-000	Y MOTOR BASE	Yﾓｰﾀﾀﾞｲ	1
44	SS-7121410-SP	SCREW 3/16-28 L=14	ﾏﾙﾋﾗﾈｼﾞ 3/16-28 L=14	3
45	RE-0600000-K0	E-RING	Eｶﾞﾀﾄﾒﾜ 6	2
46	B2533-210-000	Y BRACKET SHAFT	Yﾌﾞﾗｹｯﾄｼﾞｸ	1
47	B2529-210-0AB	STEPPING MOTOR ASM.	Xｵｸﾘ ｽﾃｯﾋﾟﾝｸﾞﾓｰﾀｰ(ｸﾐ)	1
48	B2529-210-000	STEPPING MOTOR	ｵｸﾘ ｽﾃｯﾋﾟﾝｸﾞ ﾓｰﾀ	(1)
49	E8760-452-M00	TUBE	ｽﾐﾁｭｰﾌﾞ	(0.3)
50	D6028-555-B0B	9-POLE RECEPTACLE, WHITE	9ｷﾖｸ ﾅｲﾛﾝ ﾚｾﾌﾟﾀｸﾙ(ｼﾛ)	(1)
51	D6042-555-B00	PIN-SHAPE TERMINAL, FEMALE	ﾋﾟﾝ ﾀｰﾐﾅﾙ ﾒｽ	(2)
52	SM-6040802-TR	SCREW M4X0.7 L=8	ﾛｯｶｸｱﾅﾎﾞﾙﾄ M4X0.7 L=8	(5)
53	B2516-210-000	COUPLING	ｶｯﾌﾟﾘﾝｸﾞ	(1)
54	SS-6122030-SP	SCREW 3/16-28 L=20	ﾋﾗﾈｼﾞ 3/16-28 L=20	3
55	WP-0501016-SD	WASHER 5X10.5X1	ﾋﾗｻﾞｶﾞﾈ 5X10.5X1	4
56	SS-7121610-SP	SCREW 3/16-28 L=15.5	ﾏﾙﾋﾗﾈｼﾞ 3/16-28 L=15.5	1

From the library of: Superior Sewing Machine & Supply LLC

11. FEED MECHANISM COMPONENTS

送り台関係

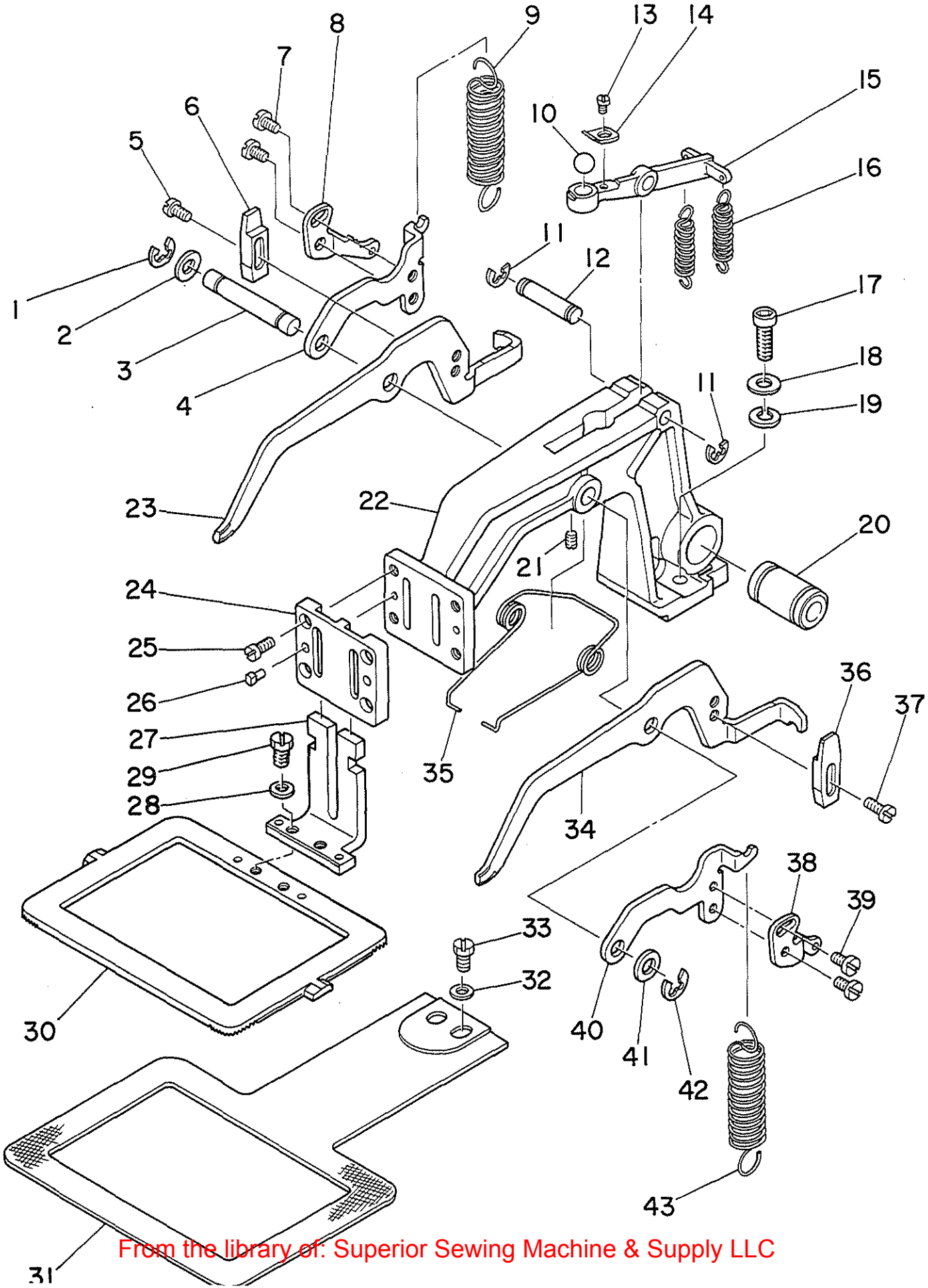

From the library of: Superior Sewing Machine & Supply LLC

1		RE-0700000-K0	E-SHAPED SNAP RING (7MM)	Eｶﾞﾀﾄﾒﾜ 7	1
2	#01	B2557-280-00A	WASHER FOR DRIVING ARM	ﾖｺｵｸﾘｳﾃﾞ ｻﾞｶﾞﾈ A	1
3		B2578-210-000	LIFTING LEVER SHAFT	ﾇﾉｵｻｴ ﾚﾊﾞｰｼﾞｸ	1
4		B2575-212-000	INSTALLING PLATE, RIGHT	ﾇﾉ ｵｻｴ ﾚﾝｹﾂ ｲﾀ (ﾐｷﾞ)	1
5		SS-7110910-TP	SCREW 11/64-40 L= 8.5	ﾏﾙﾋﾗﾈｼﾞ 11/64-40 L=8.5	2
6		B2580-212-000	STOPPER	ﾇﾉｵｻｴ ｽﾄｯﾊﾟ	1
7		SS-6110610-TP	SCREW 11/64-40 L=6	ﾋﾗﾈｼﾞ 11/64-40 L=6	2
8		B2577-212-000	REGULATE PLATE, RIGHT	ｵｻｴｱﾂ ﾁｮｳｾﾂｲﾀ (ﾐｷﾞ)	1
9		B2583-212-000	SPRING	ﾇﾉｵｻｴ ﾊﾞﾈ	1
10		B2585-210-000	BALL	ﾇﾉｵｻｴ ﾎﾞｰﾙ	1
11		RE-0600000-K0	E-RING	Eｶﾞﾀﾄﾒﾜ 6	2
12		B2563-210-000	LIFTING ARM SHAFT	ﾇﾉｵｻｴｳﾃﾞｼﾞｸ	1
13		SS-6080410-SP	SCREW 1/8-44 L=4	ﾋﾗﾈｼﾞ 1/8-44 L=4	1
14		B2586-210-000	BALL HOLDER	ﾎﾞｰﾙｵｻｴ	1
15		B2573-210-000	PRESSER ARM	ﾇﾉｵｻｴｳﾃﾞ	1
16		B2582-210-000	SPRING	ﾇﾉｱﾂ ﾁｮｳｾﾂﾊﾞﾈ	2
17		SS-6151812-TP	SCREW 15/64-28 L=18	ﾛｯｶｸｱﾅﾎﾞﾙﾄ 15/64-28	2
18		WP-0612066-SP	WASHER 6.1X11X2	ﾋﾗｻﾞｶﾞﾈ 6.1X11X2	2
19		WS-0631510-KP	SPRING WASHER	ﾊﾞﾈｻﾞｶﾞﾈ	2
20		SB-7100002-00	SLIDE BEARING	ｽﾗｲﾄﾞｼﾞｸｳｹ	1
21		SS-8110422-TP	SCREW 11/64-40 L=4	ﾄﾒﾈｼﾞ 11/64-40 L=4	1
22		B2550-212-000	FEED BRACKET	ﾇﾉｵｸﾘﾀﾞｲ	1
23		B2571-212-000	LIFTING LEVER, RIGHT	ﾇﾉ ｵｻｴ ﾚﾊﾞｰ (ﾐｷﾞ)	1
24		B2572-212-000	WORK CLAMP FOOT PLATE	ﾇﾉｵｻｴ ｽﾍﾞﾘｲﾀ	1
25		SS-4110915-SP	SCREW 11/64-40 L=9	ﾅﾍﾞﾈｼﾞ 11/64-40 L=9	4
26		B1816-280-000	GUIDE PIN	ﾅｶｶﾞﾏ ｵｻｴ ｶﾞｲﾄﾞﾋﾟﾝ	2
27		B2551-212-0A0	WORK CLAMP FOOT ASM.	ｲｯﾀｲ ﾇﾉｵｻｴｱｼｽﾍﾞﾘｲﾀｹｯｺﾞｳ	1
28		WP-0480856-SP	WASHER 4.8X8.4X0.8	ﾋﾗｻﾞｶﾞﾈ 4.8X8.4X0.8	2
29		SS-7110840-SP	SCREW 11/64-40 L=7.8	ﾏﾙﾋﾗﾈｼﾞ 11/64-40 L=7.8	2
30		B2553-210-B0B	FEEDING FRAME	ﾇﾉｵｻｴ ｿﾄﾜｸ	1
31		B2556-210-000	FEED PLATE	ｼﾀｲﾀ	1
32		WP-0651001-SC	WASHER	ﾋﾗｻﾞｶﾞﾈ	2
33		SS-9151120-CP	SCREW 15/64-28 L=11	ﾛｯｶｸﾎﾞﾙﾄ 15/64-28 L=11	2
34		B2570-212-000	LIFTING LEVER, LEFT	ﾇﾉ ｵｻｴ ﾚﾊﾞｰ (ﾋﾀﾞﾘ)	1
35		B2581-210-000	SPRING	ﾇﾉｵｻｴ ﾓﾄﾞｼﾊﾞﾈ	1
36		B2580-212-000	STOPPER	ﾇﾉｵｻｴ ｽﾄｯﾊﾟ	1
37		SS-7110910-TP	SCREW 11/64-40 L= 8.5	ﾏﾙﾋﾗﾈｼﾞ 11/64-40 L=8.5	2
38		B2576-212-000	REGULATE PLATE, LEFT	ｵｻｴｱﾂ ﾁｮｳｾﾂｲﾀ (ﾋﾀﾞﾘ)	1
39		SS-6110610-TP	SCREW 11/64-40 L=6	ﾋﾗﾈｼﾞ 11/64-40 L=6	2
40		B2574-210-000	INSTALLING PLATE, LEFT	ﾇﾉｵｻｴ ﾚﾝｹﾂｲﾀ ﾋﾀﾞﾘ	1
41	#01	B2557-280-00A	WASHER FOR DRIVING ARM	ﾖｺｵｸﾘｳﾃﾞ ｻﾞｶﾞﾈ A	1
42		RE-0700000-K0	E-SHAPED SNAP RING (7MM)	Eｶﾞﾀﾄﾒﾜ 7	1
43		B2583-212-000	SPRING	ﾇﾉｵｻｴ ﾊﾞﾈ	1

Note(注記) #01..... Selective part 選択部品

From the library of: Superior Sewing Machine & Supply LLC

12. LUBRICATION COMPONENTS
給油関係

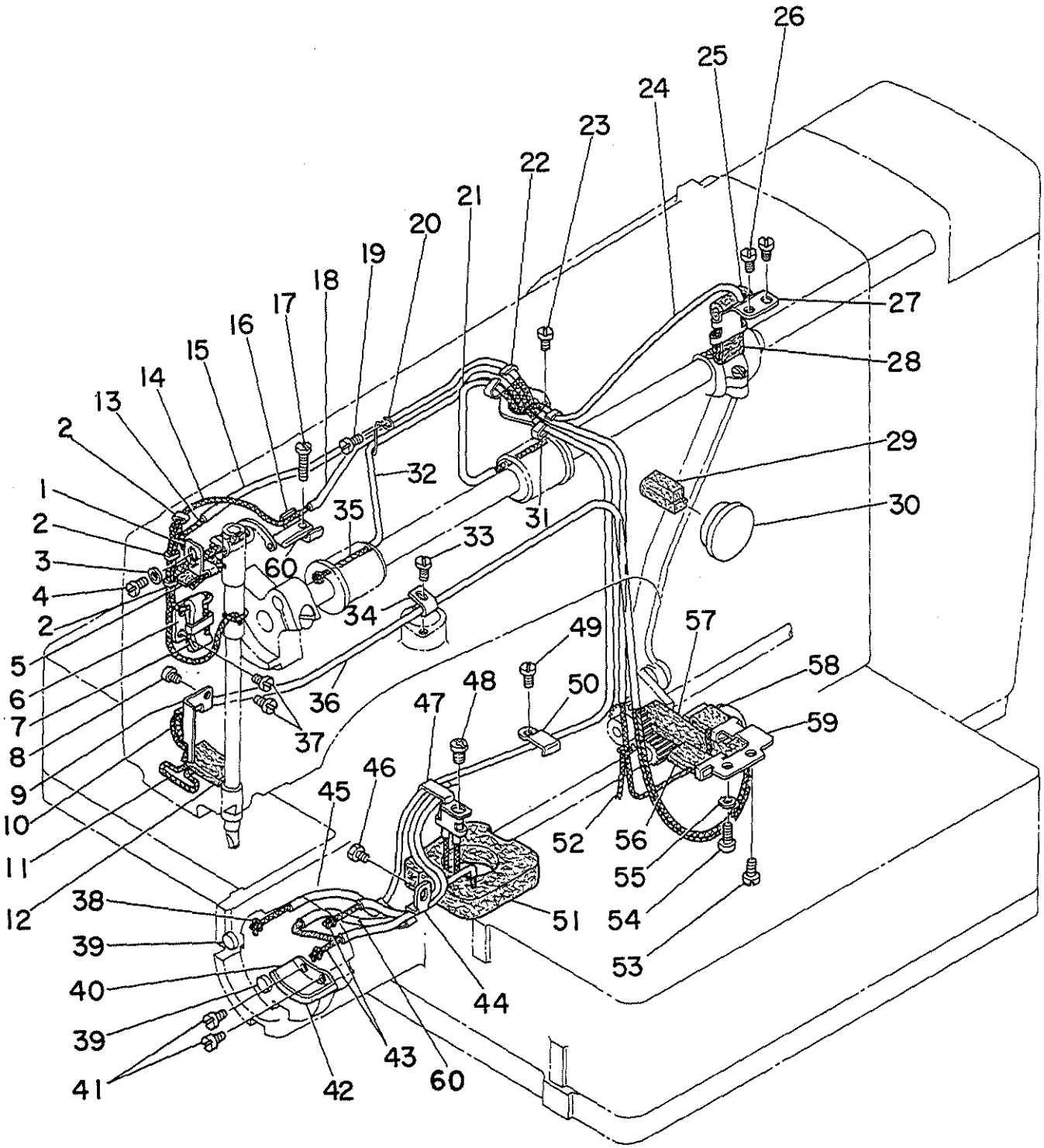

From the library of: Superior Sewing Machine & Supply LLC

1	B3520-210-000	OIL FELT SUPPORTING PLATE	ﾅｶｵｻｴ ｷﾕｳﾕｲﾀ	1
2	B1419-026-000	OIL WICK HOLDER	ﾕｼﾝ ｵｻｴ	3
3	WP-0371016-SD	WASHER 3.7X8X1	ﾋﾗｻﾞｶﾞﾈ 3.7X8X1	1
4	SS-7090520-SP	SCREW 9/64-40 L= 4.5	ﾏﾙﾋﾗﾈｼﾞ 9/64-40 L=4.5	1
5	B3518-210-000	OIL SPONGE	ﾃﾝﾋﾟﾝ ｷﾕｳﾕ ﾊﾟｲﾘｰﾝ	1
6	B3502-210-000	OIL WICK HOLDER	ﾕｼﾝｵｻｴ	1
7	B3509-280-000	OIL SPONGE	ﾊﾘﾎﾞｰ ｸﾗﾝｸ ｷﾕｰﾕ ﾊﾟｲﾘｰﾝ	1
8	SS-7110710-SP	SCREW 11/64-40 L=7	ﾏﾙﾋﾗﾈｼﾞ 11/64-40 L=7	1
9	B3503-210-000	FELT HOLDER	ﾌｪﾙﾄｵｻｴ	1
10	B3541-012-000	OIL WICK	ｶﾝﾘﾕｰ ﾕｼﾝ	1
11	B3516-210-000	OIL WICK	ﾒﾝﾌﾞﾕｼﾝ	1
12	B3507-280-000	OIL FELT	ﾒﾝﾌﾞﾌｪﾙﾄ	1
13	CQ-2020000-00	OIL WICK	ﾕｼﾝ	0.5
14	CQ-2020000-00	OIL WICK	ﾕｼﾝ	1
15	BP-3000000-00	VINYL TUBE, WHITE D=3	ﾋﾞﾆｰﾙﾊﾟｲﾌﾟ	0.3
16	B3508-280-000	LUBRICATING PLATE	ﾃﾝﾋﾟﾝ ｷﾕｰﾕｲﾀ	1
17	SS-6092120-SP	SCREW 9/64-40 L=21.2	ﾋﾗﾈｼﾞ 9/64-40 L=21.2	1
18	BP-3000000-00	VINYL TUBE, WHITE D=3	ﾋﾞﾆｰﾙﾊﾟｲﾌﾟ	0.3
19	SS-7110510-SP	SCREW 11/64-40 L=5	ﾏﾙﾋﾗﾈｼﾞ 11/64-40 L= 5	1
20	B3508-210-000	OIL TUBE HOLDER	ﾋﾞﾆｰﾙ ﾊﾟｲﾌﾟｵｻｴ	1
21	BP-3000000-00	VINYL TUBE, WHITE D=3	ﾋﾞﾆｰﾙﾊﾟｲﾌﾟ	0.1
22	B3504-210-000	OIL WICK HOLDER	ﾕｼﾝｵｻｴ	1
23	SS-7110710-SP	SCREW 11/64-40 L=7	ﾏﾙﾋﾗﾈｼﾞ 11/64-40 L=7	1
24	BP-3000000-00	VINYL TUBE, WHITE D=3	ﾋﾞﾆｰﾙﾊﾟｲﾌﾟ	0.2
25	B3518-210-000	OIL SPONGE	ﾃﾝﾋﾟﾝ ｷﾕｳﾕ ﾊﾟｲﾘｰﾝ	1
26	SS-7110710-SP	SCREW 11/64-40 L=7	ﾏﾙﾋﾗﾈｼﾞ 11/64-40 L=7	2
27	B3505-210-000	OIL FELT SUPPORTING PLATE	ｸﾗﾝｸﾛｯﾄﾞ ｷﾕｳﾕｲﾀ	1
28	B3509-280-000	OIL SPONGE	ﾊﾘﾎﾞｰ ｸﾗﾝｸ ｷﾕｰﾕ ﾊﾟｲﾘｰﾝ	1
29	B3517-210-000	OIL TANK FELT	ｷﾕｳﾕﾀﾝｸ ﾌｪﾙﾄ	1
30	B3501-210-000	OIL GAUGE	ｵｲﾙｹﾞｰｼﾞ	1
31	CQ-2020000-00	OIL WICK	ﾕｼﾝ	0.3
32	BP-3000000-00	VINYL TUBE, WHITE D=3	ﾋﾞﾆｰﾙﾊﾟｲﾌﾟ	0.3
33	SS-7110510-SP	SCREW 11/64-40 L=5	ﾏﾙﾋﾗﾈｼﾞ 11/64-40 L= 5	1
34	D1630-555-B00	CORD HOLDER	ｷﾞﾔｹｵｸﾘ ﾏｸﾞｺｰﾄﾞ ｵｻｴ	1
35	CQ-2020000-00	OIL WICK	ﾕｼﾝ	0.4
36	BP-6000000-00	VINYL TUBE, WHITE D=6	ﾋﾞﾆｰﾙ ﾊﾟｲﾌﾟ	0.5
37	SS-7110710-SP	SCREW 11/64-40 L=7	ﾏﾙﾋﾗﾈｼﾞ 11/64-40 L=7	2
38	CQ-2020000-00	OIL WICK	ﾕｼﾝ	1
39	135-29607	SHUTTLE RACE CAP	ｵｵｶﾞﾏ ﾊﾟｯｷﾝ	2
40	B3505-280-000	PRESSER PLATE	ｵｵｶﾞﾏ ｷﾕｰﾕｲﾀ	1
41	SS-6090440-SP	SCREW 9/64-40 L= 4.0	ﾋﾗﾈｼﾞ 9/64-40 L=4	2
42	B3504-280-000	OIL FELT, FOR SHUTTLE RACE	ｵｵｶﾞﾏﾌｪﾙﾄ	1
43	CQ-2522000-00	OIL WICK	ﾕｼﾝ	1.5
44	135-28906	OIL TUBE HOLDER B	ｶﾏﾕｼﾝﾄﾒ B	1
45	BP-3000000-00	VINYL TUBE, WHITE D=3	ﾋﾞﾆｰﾙﾊﾟｲﾌﾟ	1
46	SS-9110543-CP	SCREW 11/64-40 L=5.3	ﾛｯｶｸﾎﾞﾙﾄ 11/64-40 L=5.3	1
47	135-28807	OIL TUBE HOLDER A	ｶﾏﾕｼﾝﾄﾒ A	1
48	SS-4110715-SP	SCREW 11/64-40 L=7	ﾅﾍﾞﾈｼﾞ 11/64-40 L=7	1
49	SS-7110710-SP	SCREW 11/64-40 L=7	ﾏﾙﾋﾗﾈｼﾞ 11/64-40 L=7	1
50	B3509-210-000	OIL TUBE HOLDER C	ｶﾏﾕｼﾝﾄﾒ C	1
51	B3502-280-000	OIL TANK FELT	ｷﾕｰﾕﾀﾝｸ ﾌｪﾙﾄ	1
52	CQ-2020000-00	OIL WICK	ﾕｼﾝ	0.3
53	SS-7110710-SP	SCREW 11/64-40 L=7	ﾏﾙﾋﾗﾈｼﾞ 11/64-40 L=7	1
54	SS-6111140-SP	SCREW 11/64-40 L=11	ﾋﾗﾈｼﾞ 11/64-40 L=11	1
55	WP-0621016-SD	WASHER 6.2X13X1	ﾋﾗｻﾞｶﾞﾈ 6.2X13X1	1
56	B3518-280-000	OIL SPONGE	ﾃﾝﾋﾟﾝ ｷﾕｰﾕﾊﾟｲﾘｰﾝ	1
57	B3507-210-000	OIL FELT	ｷﾕｳﾕﾌｪﾙﾄ	1
58	B3509-280-000	OIL SPONGE	ﾊﾘﾎﾞｰ ｸﾗﾝｸ ｷﾕｰﾕ ﾊﾟｲﾘｰﾝ	1
59	B3506-210-000	OIL FELT SUPPORTING PLATE	ｵｵﾌﾘｺ ｷﾕｳﾕｲﾀ	1
60	B3522-210-0A0	OIL FELT ASM.	ｵｵｶﾞﾏｶﾝﾘﾕｳﾌｪﾙﾄ ｸﾐ	1

From the library of: Superior Sewing Machine & Supply LLC

13. SENSOR COMPONENTS

センサー関係

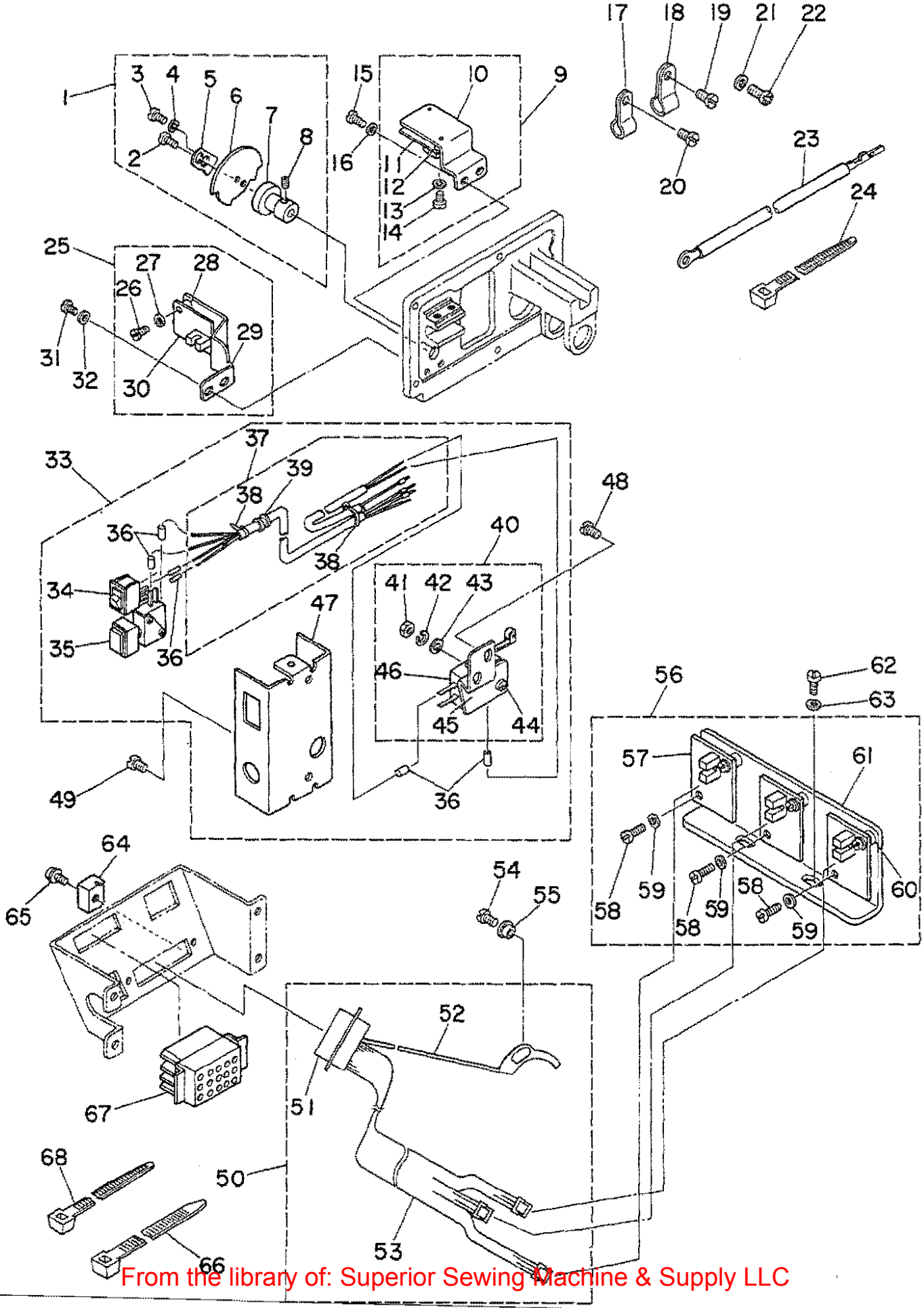

From the library of: Superior Sewing Machine & Supply LLC

1	B4008-210-0A0	Y SLIT PLATE ASM.	Yﾎｳｺｳ ｽﾘｯﾄｲﾀ ｸﾐ	1
2	SS-7110510-SP	SCREW 11/64-40 L=5	ﾏﾙﾋﾗﾈｼﾞ 11/64-40 L= 5	(1)
3	SS-7080520-SP	SCREW 1/8-44 L=4.9	ﾏﾙﾋﾗﾈｼﾞ 1/8-44 L=4.9	(1)
4	WP-0330501-SB	WASHER M3	ﾋﾗｻﾞｶﾞﾈ ﾐｶﾞｷﾏﾙ M3	(1)
5	B4010-210-000	Y SLIT ADJUSTING PLATE	Yﾎｳｺｳ ｽﾘｯﾄ ﾁｮｳｾｲｲﾀ	(1)
6	B4008-210-000	Y SLIT PLATE	Yﾎｳｺｳ ｽﾘｯﾄｲﾀ	(1)
7	B4009-210-000	Y SLIT PLATE BOSS	Yﾎｳｺｳ ｽﾘｯﾄｲﾀﾎﾞｽ	(1)
8	SS-8090670-SP	SCREW 9/64-40 L= 5.5	ﾄﾒﾈｼﾞ 9/64-40 L=5.5	(1)
9	B4006-210-0A0	Y REMOVAL SENSOR ASM.	Yｲﾄﾞｳｹﾞﾝ ｾﾝｻ ｸﾐ	1
10	B4006-210-000	Y REMOVAL SENSOR PLATE	Yｲﾄﾞｳｹﾞﾝ ｾﾝｻ ﾄﾘｯｹｲﾀ	(1)
11	M8607-510-0A0	SENSOR CIRCUIT BOARD ASM. 3	ｾﾝｻｰｷﾊﾞﾝ(3)ｸﾐ	(1)
12	B4011-210-000	SPACER	ｷﾊﾞﾝｽﾍﾟｰｻ	(2)
13	WP-0320501-SC	WASHER M3	ﾋﾗｻﾞｶﾞﾈ 3.2X7X0.5	(2)
14	SM-6031010-SC	SCREW M3X0.5 L=10	ﾋﾗｺﾈｼﾞ M3X0.5 L=10	(2)
15	SS-7110840-SP	SCREW 11/64-40 L=7.8	ﾏﾙﾋﾗﾈｼﾞ 11/64-40 L=7.8	2
16	WP-0450801-SD	WASHER 4.5X10.0X0.8	ﾋﾗｻﾞｶﾞﾈ 4.5X10X0.8	2
17	HX-0012300-0B	CABLE CLIP	ｹｰﾌﾞﾙｸﾘｯﾌﾟ	4
18	HX-0012300-0A	CABLE CLIP	ｹｰﾌﾞﾙｸﾘｯﾌﾟ	3
19	SS-6090630-SP	SCREW 9/64-40 L=6	ﾋﾗﾈｼﾞ 9/64-40 L=6	1
20	SS-7110710-SP	SCREW 11/64-40 L=7	ﾏﾙﾋﾗﾈｼﾞ 11/64-40 L=7	4
21	WP-0330501-SB	WASHER M3	ﾋﾗｻﾞｶﾞﾈ ﾐｶﾞｷﾏﾙ M3	2
22	SM-4030855-SN	SCREW M3 L=8.0	ﾅﾍﾞﾈｼﾞ M3 L=8	2
23	B4170-210-0A0	GROUND WIRE ASM. A	ﾄｰﾌﾞｱｰｽｺｰﾄﾞ A ｸﾐ	1
24	EA-9500B01-00	CABLE BAND	ｿｸｾﾝﾊﾞﾝﾄﾞ	4
25	B4005-210-0A0	Y HOME POSITION SENSOR ASM.	Yｹﾞﾝﾃﾝ ｾﾝｻ ｸﾐ	1
26	SM-6031010-SC	SCREW M3X0.5 L=10	ﾋﾗｺﾈｼﾞ M3X0.5 L=10	(2)
27	WP-0320501-SC	WASHER M3	ﾋﾗｻﾞｶﾞﾈ 3.2X7X0.5	(2)
28	B4011-210-000	SPACER	ｷﾊﾞﾝｽﾍﾟｰｻ	(2)
29	B4005-210-000	Y HOME POSITION SENSOR PLATE	Yｹﾞﾝﾃﾝ ｾﾝｻ ﾄﾘｯｹｲﾀ	(1)
30	M8606-510-0A0	SENSOR CIRCUIT BOARD ASM. 2	ｾﾝｻｰｷﾊﾞﾝ(2)ｸﾐ	(1)
31	SS-7110840-SP	SCREW 11/64-40 L=7.8	ﾏﾙﾋﾗﾈｼﾞ 11/64-40 L=7.8	2
32	WP-0450801-SD	WASHER 4.5X10.0X0.8	ﾋﾗｻﾞｶﾞﾈ 4.5X10X0.8	2
33	B4110-210-0A0	FRAME SWITCH BASE ASM.	ﾄｳﾌﾞｽｲｯﾁ ﾄﾘｯｹﾀﾞｲ ｸﾐ	1
34	HA-0005900-00	POWER SWITCH	ﾃﾞﾝｹﾞﾝｽｲｯﾁ	(1)
35	HA-0013500-00	PUSH-BUTTON SWITCH	ｵｼﾎﾞﾀﾝｽｲｯﾁ	(1)
36	E8760-452-F00	TUBE	ｽﾐﾁｭｰﾌﾞ	(0.3)
37	B4115-210-0A0	FRAME SWITCH CORD ASM.	ﾄｳﾌﾞｽｲｯﾁ ｺｰﾄﾞ ｸﾐ	(1)
38	EA-9500B01-00	CABLE BAND	ｿｸｾﾝﾊﾞﾝﾄﾞ	(2)
39	HX-0005500-0A	RUBBER BUSHING A	ｺﾞﾑ ﾌﾞｯｼｭ A	(1)
40	B4120-210-0A0	LMIT SW INSTALLING PLATE ASM.	ﾘﾐｯﾄｽｲｯﾁ ﾄﾘｯｹｲﾀ ｸﾐ	(1)
41	NM-6030000-0A	NUT M3X0.5	ﾛｯｶｸﾅｯﾄ M3X0.5 1ｼｭ	(2)
42	WS-0310702-KS	SPRING WASHER	ﾊﾞﾈｻﾞｶﾞﾈ 3.1X5.9X0.7	(2)
43	WP-0320501-SC	WASHER M3	ﾋﾗｻﾞｶﾞﾈ 3.2X7X0.5	(2)
44	SM-4031601-SB	SCREW M3X0.5 L=16	ﾅﾍﾞｺﾈｼﾞ M3X0.5 L=16	(2)
45	B4120-210-000	LMIT SWITCH INSTALLING PLATE	ﾘﾐｯﾄｽｲｯﾁ ﾄﾘｯｹｲﾀ	(1)
46	HA-0013600-00	MICROSWITCH	ﾏｲｸﾛｽｲｯﾁ	(1)
47	B4110-210-000	FRAME SWITCH BASE	ﾄｳﾌﾞｽｲｯﾁ ﾄﾘｯｹﾀﾞｲ	(1)
48	SS-7110710-SP	SCREW 11/64-40 L=7	ﾏﾙﾋﾗﾈｼﾞ 11/64-40 L=7	2
49	SS-7110710-SP	SCREW 11/64-40 L=7	ﾏﾙﾋﾗﾈｼﾞ 11/64-40 L=7	2
50	B4130-210-0A0	FRAME SENSOR CORD ASM.	ﾄｳﾌﾞｾﾝｻ ｺｰﾄﾞ ｸﾐ	1
51	HK-0253202-50	25-POLE CONNECTOR	ｺﾈｸﾀ 25P	(1)
52	B4150-210-0A0	SENSOR PLATE ASM.	ｲﾄｷﾚ ｹﾝﾁｲﾀ ｸﾐ	(1)
53	B4140-210-0A0	Y SENSOR CORD ASM.	Yｾﾝｻｺｰﾄﾞ ｸﾐ	(1)
54	SS-7090850-SP	SCREW 9/64-40 L=8	ﾏﾙﾋﾗﾈｼﾞ 9/64-40 L=8	1
55	B2703-210-000	BUSHING	ｲﾄｷﾚｹﾝﾁ ﾌﾞｯｼｭ	1
56	B4004-210-0A0	X SENSOR INSTALLING PLATE ASM.	Xｾﾝｻ ﾄﾘｯｹｲﾀ ｸﾐ	1
57	M8606-510-0A0	SENSOR CIRCUIT BOARD ASM. 2	ｾﾝｻｰｷﾊﾞﾝ(2)ｸﾐ	(3)
58	SM-6031010-SC	SCREW M3X0.5 L=10	ﾋﾗｺﾈｼﾞ M3X0.5 L=10	(6)
59	WP-0320501-SC	WASHER M3	ﾋﾗｻﾞｶﾞﾈ 3.2X7X0.5	(6)
60	B4011-210-000	SPACER	ｷﾊﾞﾝｽﾍﾟｰｻ	(6)
61	B4004-210-000	X SENSOR INSTALLING PLATE	Xｾﾝｻ ﾄﾘｯｹｲﾀ	(1)
62	SS-7110840-SP	SCREW 11/64-40 L=7.8	ﾏﾙﾋﾗﾈｼﾞ 11/64-40 L=7.8	2
63	WP-0450801-SD	WASHER 4.5X10.0X0.8	ﾋﾗｻﾞｶﾞﾈ 4.5X10X0.8	2
64	HK-0122900-00	CONNECTOR FIXED BASE	ｶﾝｺﾞｳ ｺﾃｲﾀﾞｲ	2
65	SL-4860681-SC	SCREW M2.6 X 6	ﾅﾍﾞｺﾈｼﾞ ｾﾑｽ M2.6 L=6	2
66	HX-0006500-0A	CABLE CLIP	ｿｸｾﾝﾊﾞﾝﾄﾞ	1
67	GBC-02622000	15-POLE RECEPTACLE	ﾅｲﾛﾝ ﾚｾﾌﾟﾀｸﾙ ｼﾛ 15ｷｮｸ	1
68	EA-9500B02-00	CLIP	ｹﾂｿｸﾊﾞﾝﾄﾞ 150	2

From the library of: Superior Sewing Machine & Supply LLC

14. SPECIAL ORDER PARTS COMPONENTS (1)

特別注文部品関係 (1)

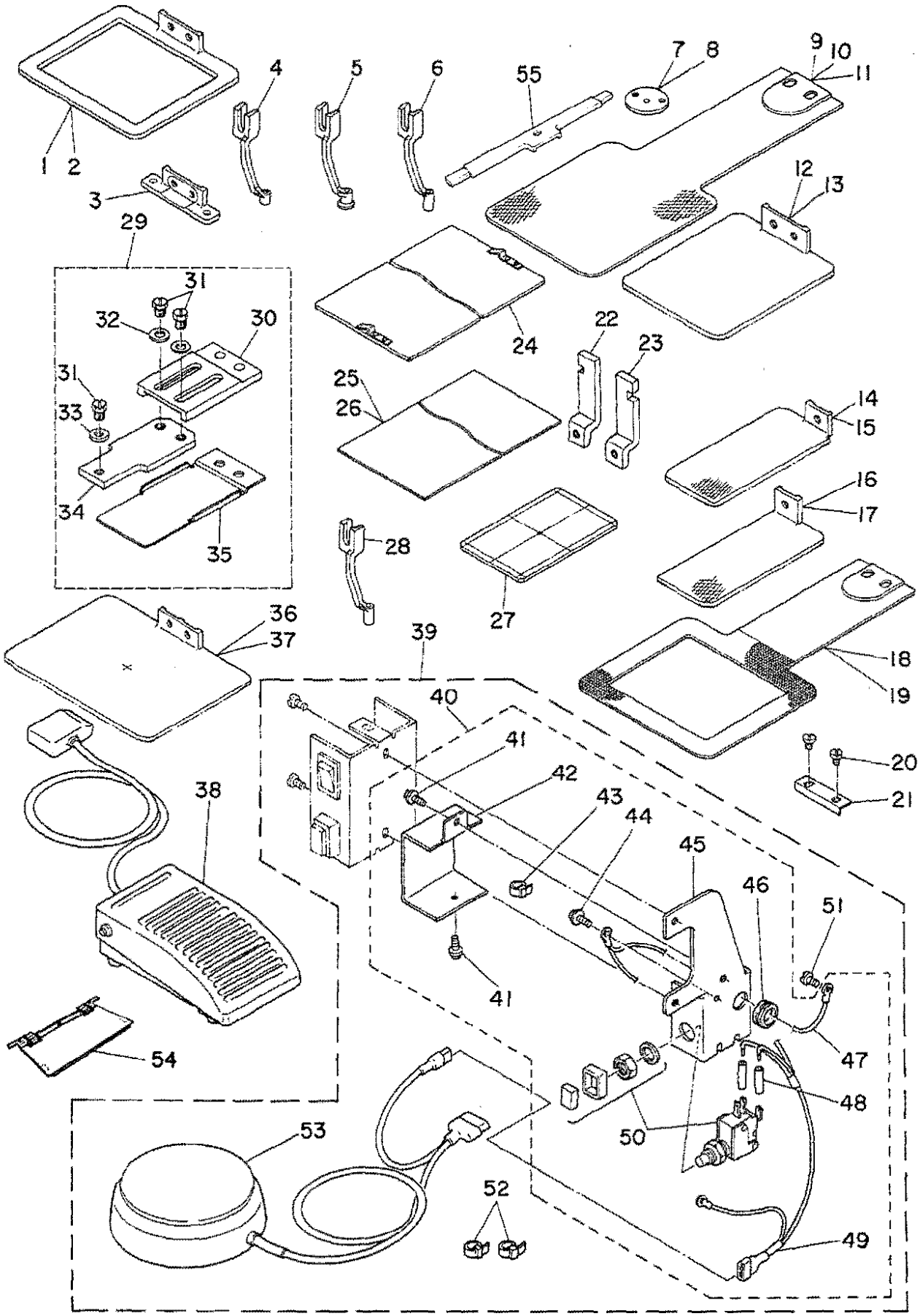

From the library of: Superior Sewing Machine & Supply LLC

1	#01	B2553-210-00B	FEEDING FRAME B	ヌノオサエソトワク B	1
2	#01	B2553-210-00C	FEEDING FRAME C	ヌノオサエソトワク C	1
3	#01	B5070-210-000	FEEDING FRAME BRACKET	ヌノオサエナカツキ゛カナク゛	1
4		B1601-210-00B	INTERMEDIATE PRESSER B	ナカオサエ B	1
5		B1601-210-00C	INTERMEDIATE PRESSER C	ナカオサエ C	1
6		B1601-210-00D	INTERMEDIATE PRESSER D	ナカオサエ D	1
7		B2426-210-00C	NEEDLE PLATE NEEDLE HOLE GUIDE	ハリアナガ゛イト゛	1
8		B2426-210-00D	NEEDLE HOLE GUIDE D=2.4	ハリアナガ゛イト゛ 2.4マル	1
9		B2556-210-0W0	FEED PLATE BLANK, LARGE	キ゛ザ゛ナシ シタイタブ゛ランク ダ゛イ	1
10		B2556-210-0X0	FEED PLATE BLANK, SMALL	シタイタブ゛ランク シヨウ	1
11		B2556-210-0Y0	FEED PLATE BLANK, LARGE	シタイタブ゛ランク ダ゛イ	1
12		B2553-210-0X0	FEEDING FRAME BLANK, SMALL	イツタイヌノオサエソトワクブ゛ランク シヨウ	1
13		B2553-210-0Y0	FEEDING FRAME BLANK, LARGE	イツタイヌノオサエソトワクブ゛ランク ダ゛イ	1
14	#01	B2558-210-0X0	RIGHT FEEDING FRAME BLANK, S	ヌノオサエソトワクミキ゛ブ゛ランク シヨウ	1
15	#01	B2558-210-0Y0	RIGHT FEEDING FRAME BLANK, L	ヌノオサエソトワクミキ゛ブ゛ランク ダ゛イ	1
16	#01	B2559-210-0X0	LEFT FEEDING FRAME BLANK,SMALL	ヌノオサエソトワクヒタ゛リ ブ゛ランク シヨウ	1
17	#01	B2559-210-0Y0	LEFT FEEDING FRAME BLANK,LARGE	ヌノオサエソトワクヒタ゛リ ブ゛ランク ダ゛イ	1
18		B2556-210-00B	FEED PLATE B	シタイタ B	1
19		B2556-210-00C	FEED PLATE C	シタイタ C	1
20		SS-7110340-SP	SCREW 11/64-40 L= 3.2	マルヒラネジ゛ 11/64-40 L= 3.2	2
21		B2592-210-000	PLASTIC PLATE STOPPER	プ゜ラスチツク ヌノオサエストツパ゜	1
22	#01	B2590-210-000	WORK CLAMP FOOT, LEFT	オサエアシスペ゛リイタ ヒタ゛リ	1
23	#01	B2591-210-000	WORK CLAMP FOOT, RIGHT	オサエアシスペ゛リイタ ミキ゛	1
24	#02	B2557-210-0A0	PLASTIC BLANK PLATE	プ゜ラスチツク ヌノオサエ ブ゛ランク ダ゛イ	1
25		B2587-210-000	MATERIAL PLATE A	ヌノオサエヨウ ソザ゛イ A	1
26		B2588-210-000	MATERIAL PLATE B	ヌノオサエヨウ ソザ゛イ B	1
27		B2561-210-000	HOME POSITION GAUGE	ケ゛ンテンケ゛ーシ゛	1
28		B1601-210-00E	INTERMEDIATE PRESSER E	ナカオサエ E	1
29		B2564-210-0A0	AUXILIARY FEED PLATE ASM.	ホシ゛ヨシタイタ クミ	1
30		B2564-210-000	FEED SUPPORT PLATE, A	ホシ゛ヨシタイタ A	(1)
31		SS-9150710-TP	BOLT 15/64-28 L=6.5	ロツカクボ゛ルト 15/64-28 L=6.5	(3)
32		WP-0651056-SD	WASHER 6.5X11X1	ヒラサ゛カ゛ネ 6.5X11X1	(2)
33		WP-0612066-SP	WASHER 6.1X11X2	ヒラサ゛カ゛ネ 6.1X11X2	(1)
34		B2565-210-000	FEED SUPPORT PLATE, B	ホシ゛ヨシタイタ B	(1)
35		B2566-210-000	FEED SUPPORT PLATE COVER	ホシ゛ヨシタイタカハ゛ー	(1)
36	#01	B2553-210-0W0	FEEDING FRAME BLANK	フ゛ンリヨウヌノオサエ ブ゛ランク	1
37	#01	B2553-210-0V0	FEEDING FRAME BLANK	フ゛ンリヨウヌノオサエ ブ゛ランク	1
38		GSB-020010A0	ONE-PEDAL SWITCH ASM.	ワンペ゜タ゛ル スイツチ クミ	1
39		GSB-010010A0	MANUAL SWITCH ASM.	テモト スイツチ クミ	1
40		GSB-010020A0	MANUAL SWITCH ASM. A	テモト スイツチ A クミ	(1)
41		SL-4040891-SC	SCREW M4X8	ナベ゛コネジ゛ セムス M4X0.7 L=8	(2)
42		GSB-01002000	MANUAL SWITCH PLATE COVER	テモト スイツチ トリツケイタ カハ゛ー	(1)
43		EA-9500801-00	CABLE BAND	ソクセンバ゛ンド゛	(1)
44		SL-4030691-SC	SCREW M3X6	ナベ゛コネジ゛ セムス M3X0.5 L=6	(1)
45		GSB-01001000	MANUAL SWITCH INSTALLING PLATE	テモト スイツチ トリツケイタ	(1)
46		HX-0005500-0A	RUBBER BUSHING A	ゴ゛ム ブ゛ツシユ A	(1)
47		GSB-010050A0	GROUND WIRE ASM.	ア゛ースセン A クミ	(1)
48		E8760-452-F00	TUBE	スミチユーブ゛	(0.1)
49		GSB-010030A0	MANUAL SWITCH CABLE ASM.	テモト スイツチ ケ゛ーブ゛ル クミ	(1)
50		HA-0013500-0A	PUSH BUTTON SWITCH	オシボ゛タンスイツチ	(1)
51		SS-7110350-SP	SCREW 11/64-40 L=3	マルヒラネジ゛ 11/64-40 L= 3.5	(1)
52		EA-9500B01-00	CABLE BAND	ソクセンバ゛ンド゛	(2)
53		GSB-010040A0	FOOT SWITCH ASM.	フツト スイツチ クミ	(1)
54		B2594-210-0A0	CASSETTE HOLDER ASM.	カセツトオサエ クミ	1
55		B2593-210-000	CASSETTE HOLDER FIXING PLATE	カセツトオサエ コテイイタ	1

Note(注記) #01..... For AMS-210A optional parts　　AMS-210A用オプション部品

#02..... For BT　For BJ　　BT用、BJ用

From the library of: Superior Sewing Machine & Supply LLC

15. SPECIAL ORDER PARTS COMPONENTS (2) (For L,J)
特別注文部品関係 (2) (L,J仕様)

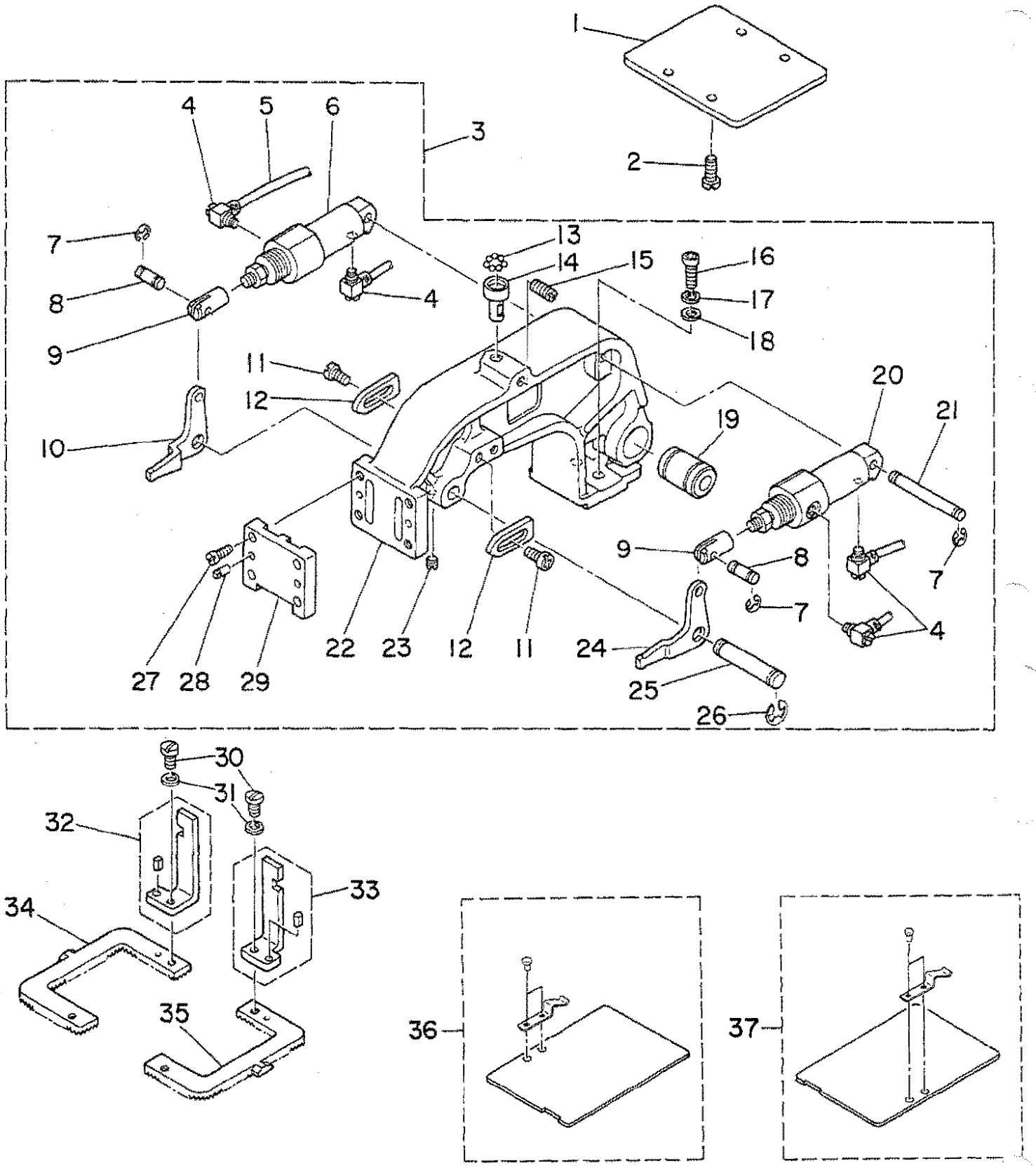

From the library of: Superior Sewing Machine & Supply LLC

1	B1502-210-00A	FEED PLATE CARRIER BAR	ｵｻｴ ｲﾀ	1
2	SS-9121340-CP	SCREW 3/16-28 L=13	ﾛｯｶｸﾎﾞﾙﾄ 3/16-28 L=13	4
3	B2550-210-0AA	FEED BRACKET ASM.	ﾇﾉｵｸﾘﾀﾞｲ (ｸﾐ)	1
4	PJ-0460525-03	HOSE ELBOW	ﾎｰｽ ｴﾙﾎﾞ	(4)
5	B4703-206-000	TUBE	ﾏﾙﾁ ﾁｭｰﾌﾞ 4ｼﾝ	(1)
6	PA-1602503-A0	WORK CLAMP FOOT CYLINDER,RIGHT	ｼﾘﾝﾀﾞ	(1)
7	RE-0400000-K0	E-RING	Eｶﾞﾀﾄﾒﾜ 4	(6)
8	B2563-206-000	CONNECTING PIN	ｼﾘﾝﾀﾞｰ ﾚﾝｹﾂﾋﾟﾝ	(2)
9	B2566-206-000	CYLINDER KNUCKLE	ｼﾘﾝﾀﾞｰ ﾅｯｸﾙ	(2)
10	B2565-206-000	ARM B	ﾇﾉｵｻｴ ｳﾃﾞ B	(1)
11	SS-6120940-SP	SCREW 3/16-28 L=9	ﾋﾗﾈｼﾞ 3/16-28 L=9	(4)
12	B2580-220-000	STOPPER	ﾇﾉｵｻｴ ｽﾄｯﾊﾟ	(2)
13	B2549-280-000	WORK CLAMP FOOT MOUNTING BASE BALL	ﾇﾉｵｸﾘﾀﾞｲ ﾎﾞｰﾙ	(7)
14	B2548-280-000	BALL RETAINER	ﾇﾉｵｸﾘﾀﾞｲ ﾎﾞｰﾙｳｹ	(1)
15	SS-8151230-SP	SCREW 15/64-28 L=12	ﾄﾒﾈｼﾞ 15/64-28 L=12	(1)
16	SS-6151812-TP	SCREW 15/64-28 L=18	ﾛｯｶｸｱﾅﾎﾞﾙﾄ 15/64-28	(2)
17	WP-0612066-SP	WASHER 6.1X11X2	ﾋﾗｻﾞｶﾞﾈ 6.1X11X2	(2)
18	WS-0631510-KP	SPRING WASHER	ﾊﾞﾈｻﾞｶﾞﾈ	(2)
19	SB-7100002-00	SLIDE BEARING	ｽﾗｲﾄﾞｼﾞｸｳｹ	(1)
20	PA-1602504-A0	WORK CLAMP FOOT CYLINDER, LEFT	ｼﾘﾝﾀﾞ	(1)
21	B2561-206-000	SUPPORT SHAFT	ｼﾘﾝﾀﾞｰ ｻｻｴ ｼﾞｸ	(1)
22	B2550-210-00A	FEED BRACKET	ﾇﾉｵｸﾘ ﾀﾞｲ	(1)
23	SS-8120410-SP	SCREW	ﾄﾒﾈｼﾞ	(1)
24	B2564-206-000	ARM A	ﾇﾉｵｻｴ ｳﾃﾞ ﾁ	(1)
25	B2562-206-000	SHAFT	ﾇﾉｵｻｴ ｳﾃﾞｼﾞｸ	(1)
26	RE-0700000-K0	E-SHAPED SNAP RING (7MM)	Eｶﾞﾀﾄﾒﾜ 7	(2)
27	B2572-212-000	WORK CLAMP FOOT PLATE	ﾇﾉｵｻｴ ｽﾍﾞﾘｲﾀ	(4)
28	SS-4110915-SP	SCREW 11/64-40 L=9	ﾅﾍﾞﾈｼﾞ 11/64-40 L=9	(2)
29	B1816-280-000	GUIDE PIN	ﾅｶｶﾞﾏ ｵｻｴ ｶﾞｲﾄﾞﾋﾟﾝ	(1)
30	SS-7110840-SP	SCREW 11/64-40 L=7.8	ﾏﾙﾋﾗﾈｼﾞ 11/64-40 L=7.8	(2)
31	WP-0480856-SP	WASHER 4.8X8.4X0.8	ﾋﾗｻﾞｶﾞﾈ 4.8X8.4X0.8	(2)
32	D2590-212-BAK	WORK CLANP FOOT ASM., RIGHT	ﾇﾉｵｻｴｱｼｽﾍﾞﾘｲﾀ ﾐｷﾞ ｸﾐ	1
33	D2591-212-BAK	WORK CLANP FOOT ASM., LEFT	ﾇﾉｵｻｴｱｼｽﾍﾞﾘｲﾀ ﾋﾀﾞﾘ ｸﾐ	1
34	B2555-210-000	FEEDING FRAME, RIGHT	ﾇﾉｵｻｴ ｿﾄﾜｸ (ﾐｷﾞ)	1
35	B2554-210-000	FEEDING FRAME, LEFT	ﾇﾉｵｻｴ ｿﾄﾜｸ (ﾋﾀﾞﾘ)	1
36	B2557-210-0AB	PLASTIC BLANK PLATE, RIGHT	ﾌﾟﾗｽﾁｯｸﾇﾉｵｻｴﾌﾞﾗﾝｸﾐｷﾞ ｸﾐ	1
37	B2557-210-0AA	PLASTIC BLANK PLATE, LEFT	ﾌﾟﾗｽﾁｯｸﾇﾉｵｻｴﾌﾞﾗﾝ	1

From the library of: Superior Sewing Machine & Supply LLC

16. TABLE COMPONENTS

脚卓関係

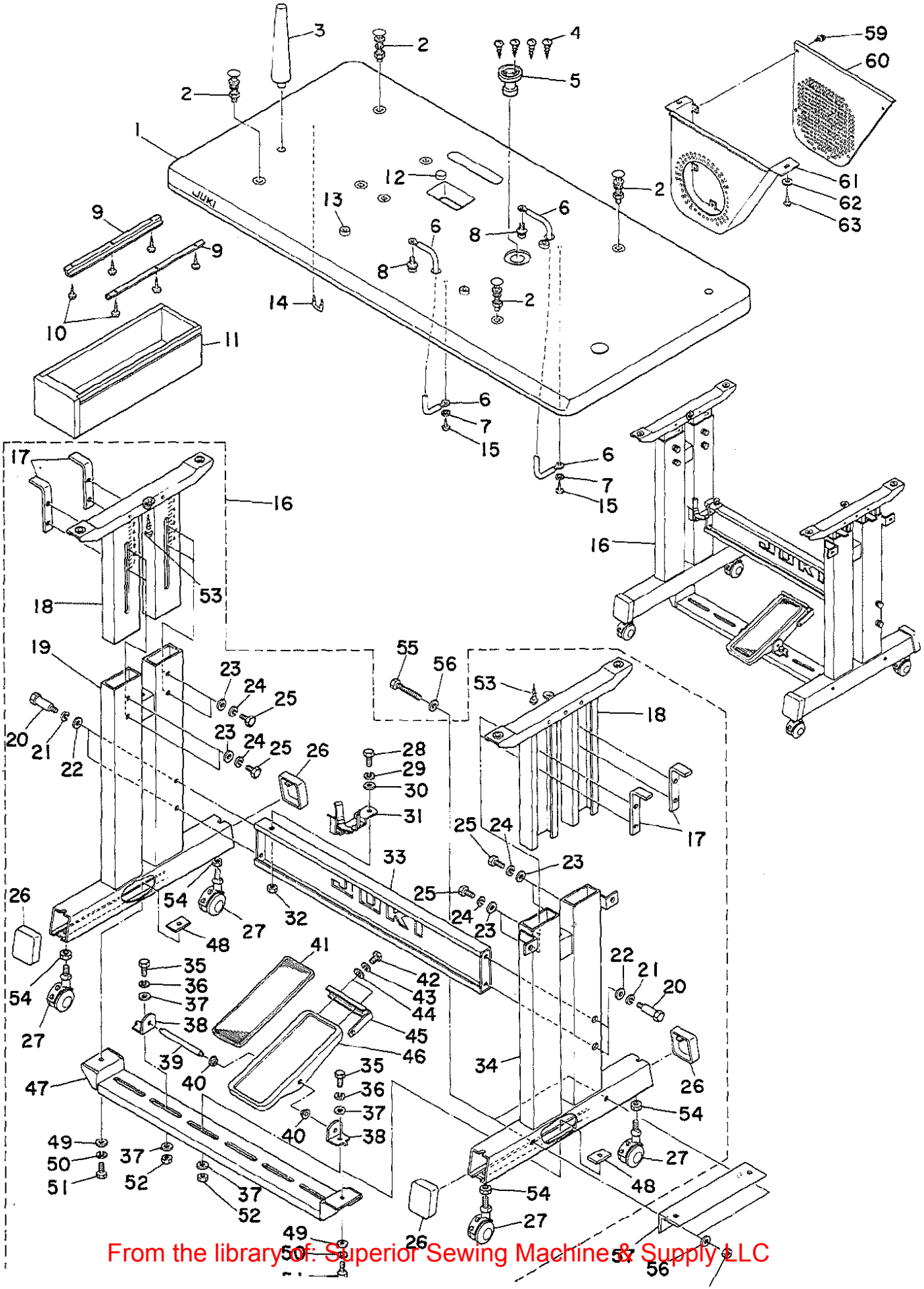

From the library of: Superior Sewing Machine & Supply LLC

1		B8201-210-000	TABLE	ﾃｰﾌﾞﾙ	1
2		MTJ-MS000000S	SCREW SET	ﾓｰﾀ ﾄﾘﾂｹﾎﾞﾙﾄ ｸﾐ	4
3		B8202-210-000	FRAME SUPPORT BAR	ﾄｰﾌﾞｻｻｴﾎﾞｳ	1
4		SK-3311600-SC	WOOD SCREW D=3.1 L=16	ﾏﾙﾓｸﾈｼﾞ D=3.1 L=16	4
5		B8202-205-000	OIL MANAGEMENT	ｱﾌﾞﾗﾀｷ	1
6		B8203-210-0A0	TABLE GROUND WIRE ASM.	ﾃｰﾌﾞﾙ ｱｰｽｺｰﾄﾞ ｸﾐ	2
7		WP-0430801-SC	WASHER M4	ﾋﾗｻﾞｶﾞﾈ ﾐｶﾞｷﾏﾙ M4	2
8		SL-4030681-SF	SCREW M3 L=6	ﾅﾍﾞｺﾈｼﾞ ｾﾑｽ M3 L=6	2
9		B8204-012-000	DRAWER SUPPORT	ﾋｷﾀﾞｼ ｻｻｴ	2
10		SK-3311600-SC	WOOD SCREW D=3.1 L=16	ﾏﾙﾓｸﾈｼﾞ D=3.1 L=16	6
11		118-49502	DRAWER	ﾋｷﾀﾞｼ	1
12		B1116-210-000	RUBBER PAD	ﾎﾞｳｼﾝｺﾞﾑ	1
13		B8204-210-000	VIBRATION-PROOF RUBBER PAD	ﾃｰﾌﾞﾙﾎﾞｰｼﾝｺﾞﾑ	3
14		D8204-555-D00	DRAWER STOPPER	ﾋｷﾀﾞｼｽﾄｯﾊﾟｰ	1
15		SK-3382001-SE	SCREW D=3.8 L=20	ﾏﾙﾓｸﾈｼﾞ D=3.8 L=20	2
16		B8101-210-0A0	STAND UNIT	ｷｬｸｹﾂｺﾞｳ	1
17		B8104-552-000	TABLE SUPPORT	ﾃｰﾌﾞﾙ ｻｻｴ ﾄﾒｲﾀ	(4)
18		B8101-210-000	STAND ASM., UPPER	ｳｴｷｬｸｹﾂｺﾞｳ	2
19		B8105-210-000	STAND ASM., LEFT	ｼﾁｭｳｹﾂｺﾞｳ ﾋﾀﾞﾘ	(1)
20		SD-1204315-SE	HINGE SCREW D=12 H=43.1	ﾀﾞﾝﾈｼﾞ D=12 H=43.1	(4)
21		WS-1253010-KN	SPRING WASHER 12.5X21.5X3	ﾊﾞﾈｻﾞｶﾞﾈ 12.5X21.5X3	(4)
22		WP-1252210-SC	WASHER 12.5X25.6X2.2	ﾋﾗｻﾞｶﾞﾈ 12.5X25.6X2.2	(4)
23		WP-0871602-SE	WASHER 8.7X18X1.6	ﾋﾗｻﾞｶﾞﾈ 8.7X18X1.6	(8)
24		WS-0861410-KR	SPRING WASHER 8.6X15X1.4	ﾊﾞﾈｻﾞｶﾞﾈ 8.6X15X1.4	(8)
25		SM-9082023-SE	SCREW M8 L=20	ﾛｯｶｸﾎﾞﾙﾄ M8 L=20	(8)
26		B8110-552-000	RUBBER CAP	ｷｬｸﾄﾞﾀﾞｲ ｷｬｯﾌﾟ	(4)
27		B8150-210-000	CASTER	ﾃｰﾌﾞﾙｷｬｽﾀ	(4)
28		SM-9082023-SE	SCREW M8 L=20	ﾛｯｶｸﾎﾞﾙﾄ M8 L=20	(1)
29		WS-0861410-KR	SPRING WASHER 8.6X15X1.4	ﾊﾞﾈｻﾞｶﾞﾈ 8.6X15X1.4	(1)
30		WP-0871602-SE	WASHER 8.7X18X1.6	ﾋﾗｻﾞｶﾞﾈ 8.7X18X1.6	(1)
31		B8126-210-000	OIL HOLDER ASM.	ｱﾌﾞﾗｻｼｳｹﾀﾞｲｹｯｺﾞｳ	(1)
32		NM-6080721-SE	NUT M8	ﾛｯｶｸﾅｯﾄ M8	(1)
33		B8108-210-000	STAND SIDE SUPPORT ASM.	ﾖｺｼﾁｭｳｹﾂｺﾞｳ	(1)
34		B8103-210-000	STAND ASM., RIGHT	ｼﾁｭｳｹﾂｺﾞｳ.ﾐｷﾞ	(1)
35		SM-9082023-SE	SCREW M8 L=20	ﾛｯｶｸﾎﾞﾙﾄ M8 L=20	(2)
36		WS-0861410-KR	SPRING WASHER 8.6X15X1.4	ﾊﾞﾈｻﾞｶﾞﾈ 8.6X15X1.4	(2)
37		WP-0871602-SE	WASHER 8.7X18X1.6	ﾋﾗｻﾞｶﾞﾈ 8.7X18X1.6	(4)
38		B8114-210-000	PEDAL SHAFT BRACKET	ﾌﾐｲﾀｼﾞｸｳｹ	(2)
39		B8153-771-000	PEDAL CONNECTING ROD	ﾍﾟﾀﾞﾙｼﾞｸ	(1)
40		D8113-555-B00	PEDAL BUSHING	ﾌﾐｲﾀ ﾌﾞｯｼｭ	(2)
41		B8152-771-000	PEDAL MAT	ﾍﾟﾀﾞﾙﾏｯﾄ	(1)
42		SM-9061203-SE	SCREW M6 L=12	ﾛｯｶｸﾎﾞﾙﾄ M6 L=12	(2)
43		WS-0621210-KR	SPRING WASHER 6.2X11.4X1.2	ﾊﾞﾈｻﾞｶﾞﾈ 6.2X11.4X1.2	(2)
44		WP-0671016-SE	WASHER 6.7X13X1	ﾋﾗｻﾞｶﾞﾈ 6.7X13X1	(2)
45		B8125-210-000	PEDAL ADJUSTING PLATE	ﾌﾐｲﾀﾁｮｳｾｲﾀ	(1)
46		B8151-210-000	PEDAL	ﾍﾟﾀﾞﾙ	(1)
47		B8107-210-000	LEG BOTTOM SUPPORT ASM.	ｼﾀｼﾁｭｳｹﾂｺﾞｳ	(1)
48		B8112-552-000	LEG BOTTOM SUPPORT BRACKET	ｼﾀｼﾁｭｰ ﾄﾒｲﾀ	(2)
49		WP-0871602-SE	WASHER 8.7X18X1.6	ﾋﾗｻﾞｶﾞﾈ 8.7X18X1.6	(2)
50		WS-0861410-KR	SPRING WASHER 8.6X15X1.4	ﾊﾞﾈｻﾞｶﾞﾈ 8.6X15X1.4	(2)
51		SM-9082023-SE	SCREW M8 L=20	ﾛｯｶｸﾎﾞﾙﾄ M8 L=20	(2)
52		NM-6080721-SE	NUT M8	ﾛｯｶｸﾅｯﾄ M8	(2)
53		SK-3452000-SC	WOOD SCREW D=4.5 L=20	ﾏﾙﾓｸﾈｼﾞ D=4.5 L=20	(2)
54		NM-6120003-SE	NUT M12	ﾛｯｶｸﾅｯﾄ M12 3ｼｭ	(4)
55		SM-9086513-SC	SCREW M8 L=65	ﾛｯｶｸﾎﾞﾙﾄ M8 L=65	2
56		WP-0871602-SE	WASHER 8.7X18X1.6	ﾋﾗｻﾞｶﾞﾈ 8.7X18X1.6	4
57		B8180-210-000	CONTROL BOX FIXED PLATE	ｾｲｷﾞｮﾊﾞｺ ｺﾃｲｲﾀ	1
58		NM-6080721-SE	NUT M8	ﾛｯｶｸﾅｯﾄ M8	2
59	#01	SL-4040691-SC	SCREW M4 X 6	ﾅﾍﾞｺﾈｼﾞ ｾﾑｽ M4X0.7 L=6	6
60	#01	B8211-210-000	MOTOR PULLEY COVER B	ﾓｰﾀ ﾌﾟｰﾘ ｶﾊﾞｰ B	1
61	#01	B8210-210-000	MOTOR PULLEY COVER A	ﾓｰﾀ ﾌﾟｰﾘ ｶﾊﾞｰ A	1
62	#01	WP-0561616-SC	WASHER 5.6X16X1.6	ﾋﾗｻﾞｶﾞﾈ 5.6X16X1.6	2
63	#01	SK-3552500-SC	WOOD SCREW D=5.5 L=25	ﾏﾙﾓｸﾈｼﾞ D=5.5 L=25	2

Note(注記) #01..... For export 輸出用

From the library of: Superior Sewing Machine & Supply LLC

17. CONTROL BOX COMPONENTS

制御ボックス関係

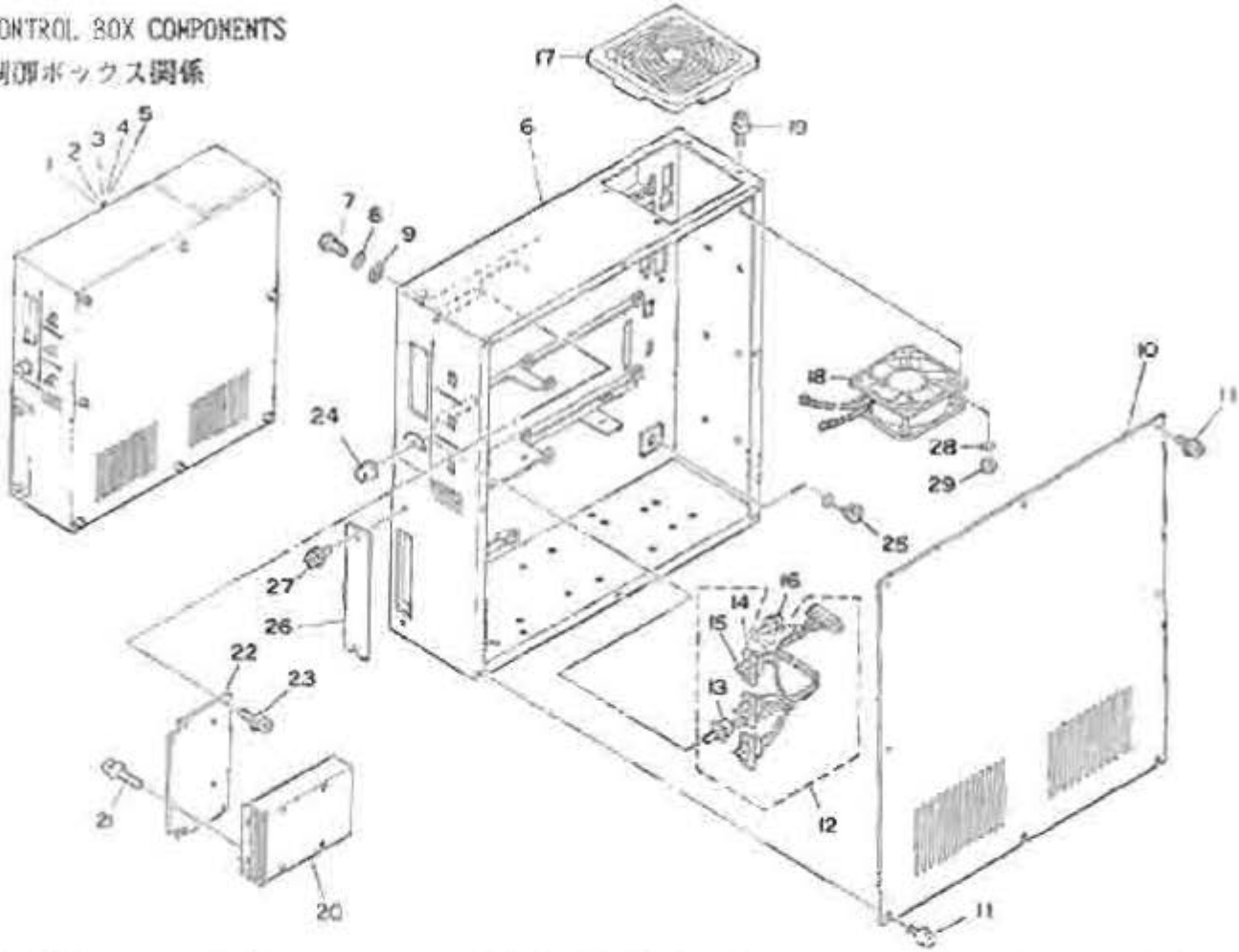

REF.NO.	NOTE	PART NO.	DESCRIPTION	ヒ ン ス イ	AMT.
1	#01	M8510-513-BA0	CONTROL BOX ASM. B	ｾｲｷﾞｮﾊﾞｺｸﾐ	1
2	#02	M8510-513-DA0	CONTROL BOX ASM. C	ｾｲｷﾞｮﾊﾞｺｸﾐ	1
3	#03	M8510-513-AA0	CONTROL BOX ASM. A	ｾｲｷﾞｮﾊﾞｺｸﾐ	1
4	#04	M8510-513-CA0	CONTROL BOX ASM. C	ｾｲｷﾞｮﾊﾞｺｸﾐ	1
5	#05	M8510-513-EA0	CONTROL BOX ASM. E	ｾｲｷﾞｮﾊﾞｺｸﾐ	1
6		M1001-513-000	CONTROL BOX	ｾｲｷﾞｮ ﾎﾞｯｸｽ	1
7		SM-0082023-SE	SCREW M8 L=20	ﾛｯｸｶﾞﾎﾞﾙﾄ M8 L=20	4
8		WS-0861410-KR	SPRING WASHER 8.6X15X1.4	ﾊﾞﾈｶﾞﾜｯｼｬ 8.6X15X1.4	4
9		WP-0850002-SC	WASHER 8.5X18X1.6	ﾋﾗｶﾞﾜｯｼｬ 8.5X18X1.6	4
10		M1002-512-000	CONTROL BOX COVER	ｾｲｷﾞｮﾎﾞｯｸｽ ｶﾊﾞｰ	1
11		SL-4041091-SC	SCREW M4 X 10	ﾅﾍﾞｺﾈｼﾞ ｾﾑｽ M4X0.7 L=10	8
12		M8512-512-0A0	SWITCH VOLUME ASM.	ｽｲｯﾁﾎﾞﾘｭｰﾑ ｸﾐ	1
13		HR-0284050-30	VOLUME	ｶﾍﾝ ﾃｲｺｳｷ 50K	(1)
14		HA-0013700-00	LEVER SWITCH	ﾚﾊﾞｰｽｲｯﾁ	(3)
15		E9646-252-000	SWITCH LEVER	ﾚﾊﾞｰ	(3)
16		SM-4020501-SC	SCREW M2 L=5	ﾅﾍﾞｺﾈｼﾞ M2 L=5	6
17		HM-0006300-10	FILTER	ﾌｨﾙﾀｰ	1
18		M8578-513-0A0	FAN ASM.	ﾌｧﾝ ｸﾐ	1
19		SN-1044050-SW	SCREW M4X0.7 L=40	ﾅﾗｺﾈｼﾞ M4X0.7 L=40	4
20		HX-0029800-00	FLOPPY DISK DRIVER	ﾌﾛｯﾋﾟｰ ﾃﾞｨｽｸ	1
21		SL-4030691-SC	SCREW M3X6	ﾅﾍﾞｺﾈｼﾞ ｾﾑｽ M3X0.5 L=6	4
22		M1011-512-000	FDD INSTALLING PLATE	FDDﾄﾘﾂｹｲﾀ	1
23		SL-4041091-SC	SCREW M4 X 10	ﾅﾍﾞｺﾈｼﾞ ｾﾑｽ M4X0.7 L=10	4
24		HX-0011400-0B	KNOB	ﾎﾞﾘｭｰﾑﾂﾏﾐ	1
25		HX-0002100-00	CORD BUSHING	ｺｰﾄﾞﾌﾞｯｼｭ	1
26		M1010-510-000	PLATE	ｺﾈｸﾀﾒﾂｹｲﾀ	1
27		SL-4041091-SC	SCREW M4 X 10	ﾅﾍﾞｺﾈｼﾞ ｾﾑｽ M4X0.7 L=10	2
28		WS-0410002-KN	SPRING WASHER M4	ﾊﾞﾈｶﾞﾜｯｼｬ M4	4
29		NM-6040001-SB	WIND ADJUSTING PLATE ATTACHING NUT	ﾛｯｸｶﾞﾅｯﾄ M4X0.7 1ｼｭ	4

Note(注記) #01..... For 100V(For domestic use) 100V用(国内用)

#02..... For 100V(For export) 100V用(輸出用)

#03..... For 200V For domestic use) 200V用(国内用)

From the library of: Superior Sewing Machine & Supply LLC

操作ボックス関係

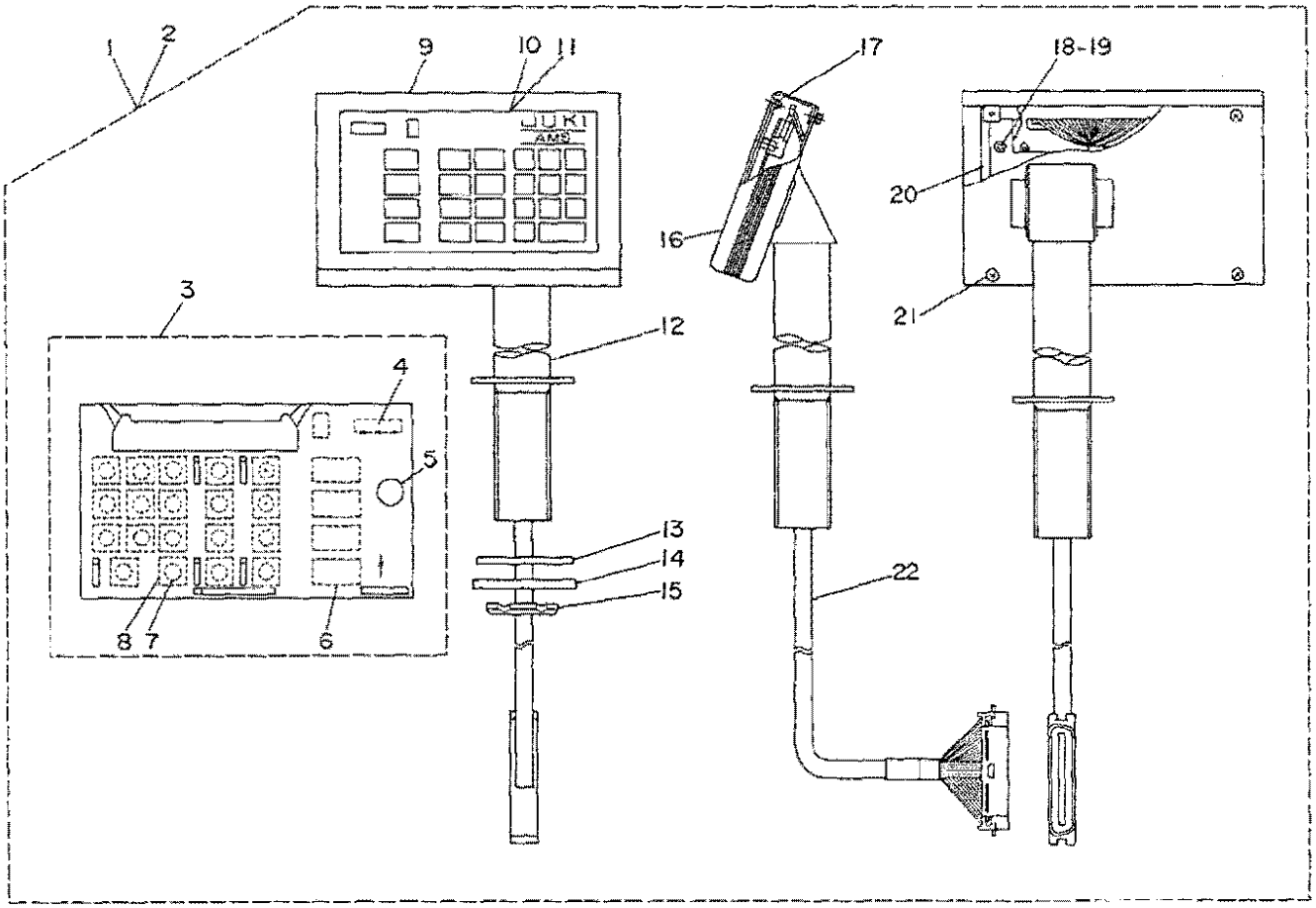

REF.NO.	NOTE	PART NO.	DESCRIPTION	ヒンメイ	AMT.
1	#01	M8570-513-0A0	OPERATION BOX ASM.	ｿｳｻ ﾊﾞｺ ｸﾐ	1
2	#02	M8570-510-AA0	OPERATION BOX ASM.	ｿｳｻﾊﾞｺ ｸﾐ	1
3		M8670-510-0A0	OPERATION CIRCUIT BOARD ASM.	ｿｳｻｷﾊﾞﾝ ｸﾐ	(1)
4		HX-0011600-00	BATTERY 3.6V	ﾃﾞﾝﾁ 3.6V	(1)
5		HX-0015300-00	BUZZER 1	ﾌﾞｻﾞｰ	(1)
6		HG-0032900-00	DIODE (LA301VLL)	ﾀﾞｲｵｰﾄﾞ LA301VLL	(13)
7		M1083-510-000	SPACER	ｽｲｯﾁｽﾍﾟｰｻ	(19)
8		HA-0007600-00	TACT SWITCH	ﾀｸﾄｽｲｯﾁ	(19)
9		M1081-510-000	OPERATION BOX FRONT COVER	ｿｳｻﾊﾞｺｵﾓﾃｶﾊﾞｰ	(1)
10		M3004-513-00A	OPERATION PANEL	ｿｳｻﾊﾟﾈﾙｼｰﾄ	(1)
11		M3004-513-0A0	OPERATION PANEL	ｿｳｻ ﾊﾟﾈﾙ ｼｰﾄ ｸﾐ	(1)
12		M8572-510-0A0	OPERATION BOX STAND ASM.	ｿｳｻﾊﾞｺｼﾁｭｳ ｸﾐ	(1)
13		M1076-510-000	VIBRATION-PROOF RUBBER PAD	ｼﾁｭｳﾎﾞｳｼﾝｺﾞﾑ	(1)
14		M1077-510-000	WASHER	ｼﾁｭｳﾋﾗｻﾞｶﾞﾈ	(1)
15		M1078-510-000	NUT	ｼﾁｭｳｺﾃｲﾅｯﾄ	(1)
16		M1080-510-000	OPERATION BOX SIDE COVER	ｿｳｻﾊﾞｺｻｲﾄﾞｶﾊﾞｰ	(2)
17		NM-6030001-SC	NUT M3	ﾛｯｶｸﾅｯﾄ M3X0.5 1ｼｭ	(4)
18		NM-6030001-SC	NUT M3	ﾛｯｶｸﾅｯﾄ M3X0.5 1ｼｭ	(6)
19		WP-0320500-SC	WASHER M3	ﾋﾗｻﾞｶﾞﾈ ｺｶﾞﾀﾏﾙ M3	(6)
20		M1082-510-000	OPERATION BOX BASE COVER	ｿｳｻﾊﾞｺﾍﾞｰｽｶﾊﾞｰ	(1)
21		SL-4030881-SC	SCREW M3X8	ﾅﾍﾞｺﾈｼﾞ ｾﾑｽ M3X0.5 L=8	(4)
22		M8571-510-0A0	OPERATION BOX TRUNK CORD ASM.	ｿｳｻﾊﾞｺﾁｭｳｹｲｹｰﾌﾞﾙ ｸﾐ	(1)

Note(注記) #01..... For domestic use 国内用
#02..... For export 輸出用

From the library of: Superior Sewing Machine & Supply LLC

19. CIRCUIT BOARD COMPONENTS

基板関係

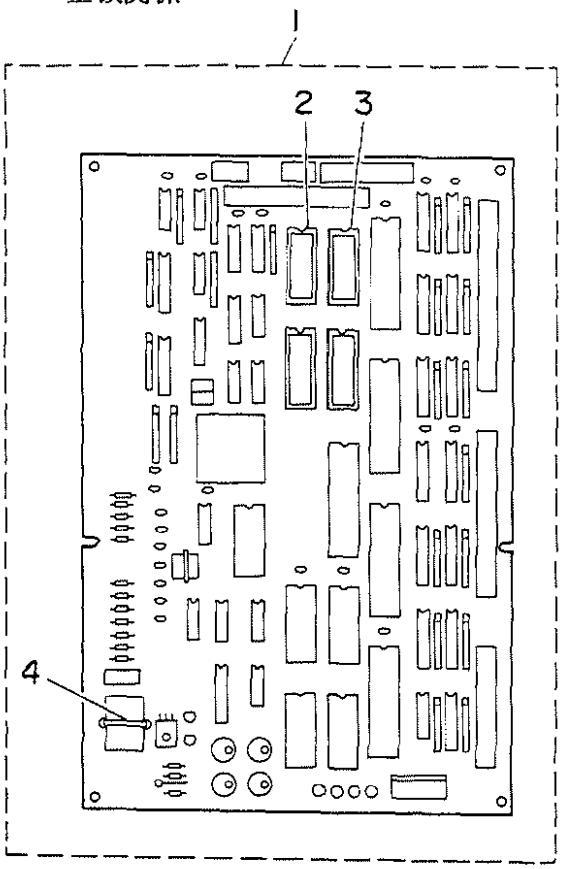

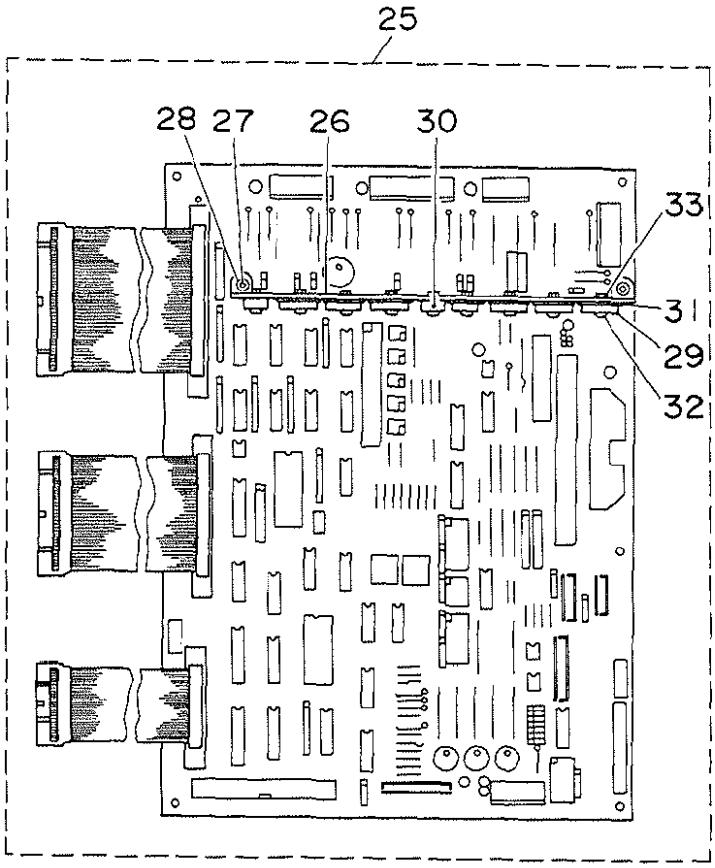

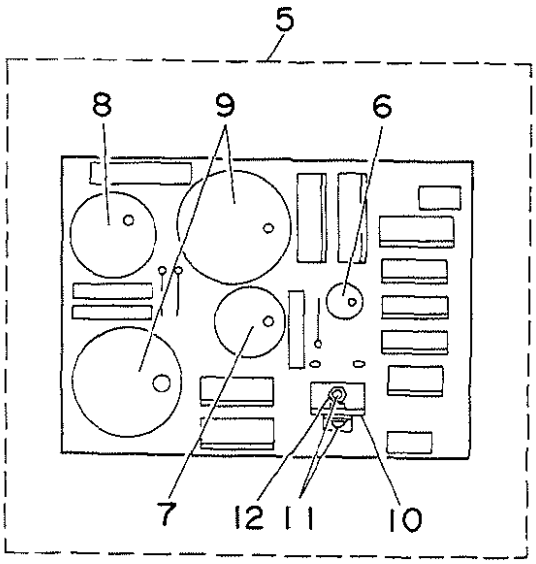

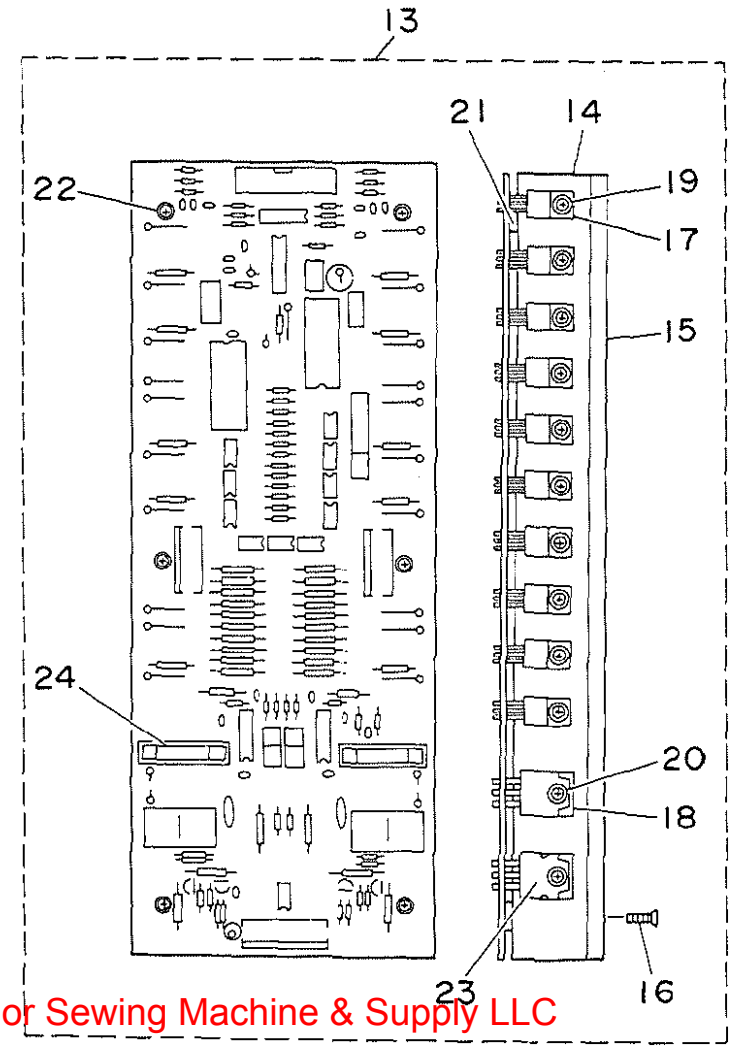

From the library of: Superior Sewing Machine & Supply LLC

1	M8601-512-AB0	CPU CIRCUIT BOARD ASM. C	CPU ｷﾊﾞﾝ(C)ｸﾐ	1
2	HL-0084210-03	ROM (1)	IC	(1)
3	HL-0084210-04	ROM (2)	IC	(1)
4	HX-0011600-00	BATTERY 3.6V	ﾃﾞﾝﾁ 3.6V	(1)
5	M8604-512-0A0	POWER CIRCUIT BOARD ASM.	POWERｷﾊﾞﾝ ｸﾐ	1
6	HC-0108022-10	CAPACITOR 220MF	ｺﾝﾃﾞﾝｻ 220MF	(1)
7	HC-0187010-20	CAPACITOR 1000MF	ｺﾝﾃﾞﾝｻ 1000MF	(1)
8	HC-0188033-20	CAPACITOR 3300MF	ｺﾝﾃﾞﾝｻ 3300MF	(1)
9	HC-0188010-30	CAPACITOR 10000MF	ｺﾝﾃﾞﾝｻ 10000MF	(2)
10	GBR-01713000	TRANSISTOR FIN B	ﾄﾗﾝｼﾞｽﾀﾌｨﾝ B	(1)
11	SL-4030881-SC	SCREW M3X8	ﾅﾍﾞｺﾈｼﾞ ｾﾑｽ M3X0.5 L=8	(2)
12	NM-6030001-SC	NUT M3	ﾛｯｶｸﾅｯﾄ M3X0.5 1ｼｭ	(2)
13	M8603-512-0A0	PMDC CIRCUIT BOARD ASM.	PMDCｷﾊﾞﾝ ｸﾐ	1
14	M1003-512-000	RADIATOR PLATE C	ﾎｳﾈﾂﾊﾞﾝ C	(2)
15	M1004-512-000	RADIATOR PLATE D	ﾎｳﾈﾂﾊﾞﾝ D	(1)
16	SM-1031201-SC	SCREW M3X0.5 L=12	ｻﾗｺﾈｼﾞ M3X0.5 L=12	(8)
17	HT-0024600-00	TRANSISTOR (2SD1162)	ﾄﾗﾝｼﾞｽﾀ(2SD1162)	(20)
18	HG-0032700-00	DIODE ARRAY	ﾀﾞｲｵｰﾄﾞｱﾚｲ	(2)
19	SL-4030881-SC	SCREW M3X8	ﾅﾍﾞｺﾈｼﾞ ｾﾑｽ M3X0.5 L=8	(20)
20	SL-4031081-SC	SCREW M3 X 10	ﾅﾍﾞﾈｼﾞ ｾﾑｽ M3 L=10	(4)
21	M9609-171-000	SPACER	ﾋｰﾄｼﾝｸ ﾄﾘｯｹｽﾍﾟｰｻ	(6)
22	SL-4031481-SC	SCREW M3 X 14	ﾅﾍﾞｺﾈｼﾞ ｾﾑｽ M3X0.5 L=14	(6)
23	HT-0033300-00	FET (2SJ113)	ﾄﾗﾝｼﾞｽﾀ	(2)
24	E9628-252-000	FUSE 7A	ﾋｭｰｽﾞ 7A	(2)
25	M8602-512-0A0	I/F CIRCUIT BOARD ASM.	I/Fｷﾊﾞﾝ ｸﾐ	1
26	M1021-512-000	RADIATOR PLATE A	ﾎｳﾈﾂﾊﾞﾝ A	(1)
27	SL-4031281-SC	SCREW M3 X 12	ﾅﾍﾞｺﾈｼﾞ ｾﾑｽ M3 L=12	(2)
28	NM-6030001-SC	NUT M3	ﾛｯｶｸﾅｯﾄ M3X0.5 1ｼｭ	(2)
29	HT-0025700-00	TRANSISTOR 2SD1296	ﾄﾗﾝｼﾞｽﾀ (2SD1296)	(4)
30	HL-0063900-00	IC (UPC14324H)	IC (UPC14324H)	(1)
31	HX-0019700-00	INSULATE PLATE	ｾﾞﾂｴﾝﾊﾞﾝ	(5)
32	SL-4031281-SC	SCREW M3 X 12	ﾅﾍﾞｺﾈｼﾞ ｾﾑｽ M3 L=12	(5)
33	NM-6030001-SC	NUT M3	ﾛｯｶｸﾅｯﾄ M3X0.5 1ｼｭ	(5)

From the library of: Superior Sewing Machine & Supply LLC

20. POWERW SUPPLY & CORD COMPONENTS

電源・コード関係

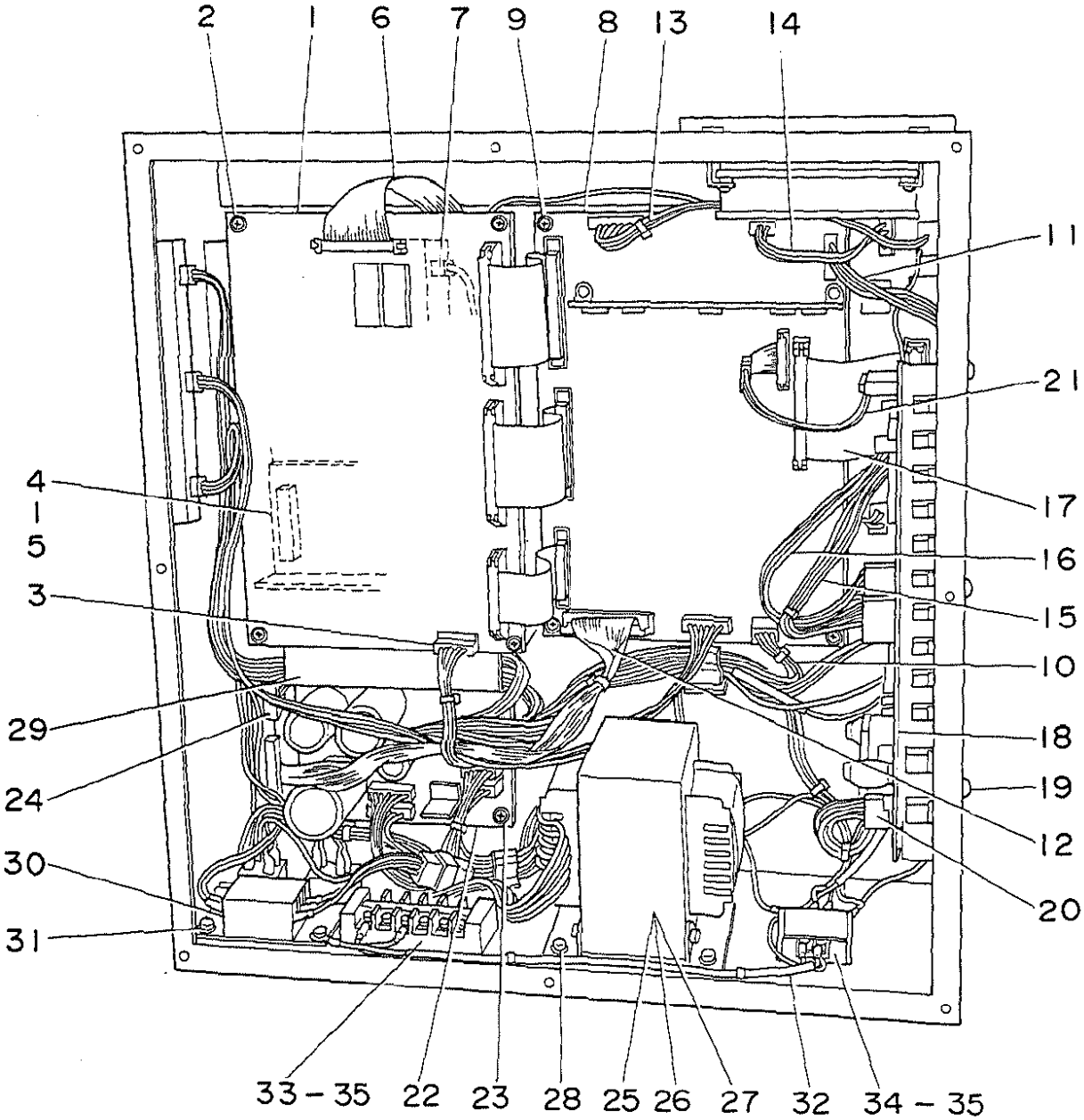

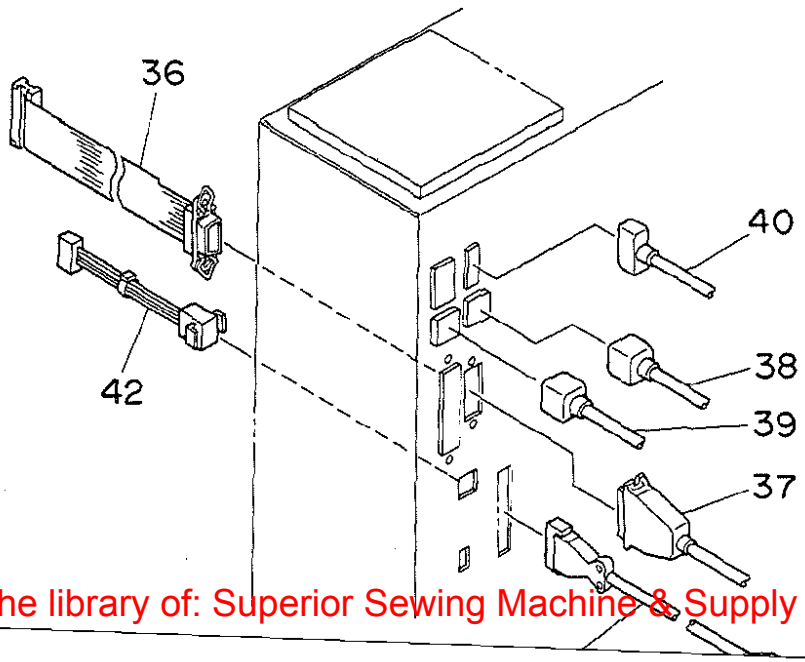

From the library of: Superior Sewing Machine & Supply LLC

1		M8601-512-AB0	CPU CIRCUIT BOARD ASM. C	CPU ｷﾊﾞﾝ(C)ｸﾐ	1
2		SL-4030891-SC	SCREW M3X8	ﾅﾍﾞｺﾈｼﾞ ｾﾑｽ M3 L=8	4
3		M8554-512-0A0	CPU POWER SOURCE CORD ASM.	CPUﾃﾞﾝｹﾞﾝｺｰﾄﾞ ｸﾐ	1
4		M8511-512-0A0	REGULATOR ASM.	ﾚｷﾞｭﾚｰﾀ ｸﾐ	1
5		SL-4030891-SC	SCREW M3X8	ﾅﾍﾞｺﾈｼﾞ ｾﾑｽ M3 L=8	2
6		M8546-512-0A0	FDD SIGNALING CORD ASM.	FDD ｼﾝｺﾞｰｺｰﾄﾞ ｸﾐ	1
7		M8547-512-0A0	FDD POWER SOURCE CORD ASM.	FDD ﾃﾞﾝｹﾞﾝｺｰﾄﾞ ｸﾐ	1
8		M8602-512-0A0	I/F CIRCUIT BOARD ASM.	I/Fｷﾊﾞﾝ ｸﾐ	1
9		SL-4030891-SC	SCREW M3X8	ﾅﾍﾞｺﾈｼﾞ ｾﾑｽ M3 L=8	6
10		M8556-512-0A0	I/F CONTROL POWER CORD ASM.	I/Fｾｲｷﾞﾖｳ ﾃﾞﾝｹﾞﾝｺｰﾄﾞｸﾐ	1
11		M8557-512-0A0	I/F DRIVING POWER CORD ASM.	I/Fｸﾄﾞｳﾖｳ ﾃﾞﾝｹﾞﾝｺｰﾄﾞ ｸﾐ	1
12		M8551-512-0A0	PGM-1 SIGNALING CORD ASM.	PGM-1 ｼﾝｺﾞｳｺｰﾄﾞ ｸﾐ	1
13		M8568-513-0A0	SOLENOID CORD ASM.	ｿﾚﾉｲﾄﾞ ｺｰﾄﾞ ｸﾐ	1
14		M8569-512-0A0	CLUTCH BRAKE CORD ASM.	ｸﾗｯﾁ ﾌﾞﾚｰｷｺｰﾄﾞ ｸﾐ	1
15		M8544-512-0A0	X PULSE MOTOR CORD ASM.	Xﾊﾟﾙｽﾓｰﾀ ｺｰﾄﾞｸﾐ	1
16		M8545-512-0A0	Y PULSE MOTOR CORD ASM.	Yﾊﾟﾙｽﾓｰﾀ ｺｰﾄﾞｸﾐ	1
17		M8542-512-0A0	SIGNALING CORD ASM.	ｿｳｻﾊﾞｺ ｼﾝｺﾞｳ ｺｰﾄﾞ ｸﾐ	1
18		M8603-512-0A0	PMDC CIRCUIT BOARD ASM.	PMDCｷﾊﾞﾝ ｸﾐ	1
19		SL-4041091-SC	SCREW M4 X 10	ﾅﾍﾞｺﾈｼﾞ ｾﾑｽ M4X0.7 L=10	6
20		M8555-512-0A0	PMDC POWER SOURCE CORD ASM.	PMDCﾃﾞﾝｹﾞﾝｺｰﾄﾞ ｸﾐ	1
21		M8543-512-0A0	PMDC SIGNALING CORD ASM.	PMDCｼﾝｺﾞｳ ｺｰﾄﾞ ｸﾐ	1
22		M8604-512-0A0	POWER CIRCUIT BOARD ASM.	POWERｷﾊﾞﾝ ｸﾐ	1
23		SL-4030891-SC	SCREW M3X8	ﾅﾍﾞｺﾈｼﾞ ｾﾑｽ M3 L=8	4
24		M8552-512-0A0	PGM-1 POWER SOURCE CORD ASM.	PGM-1 ﾃﾞﾝﾘｭｳｺｰﾄﾞ ｸﾐ	1
25	#01	M8513-512-AA0	TRANSFORMER ASM. A	ﾃﾞﾝｹﾞﾝ ﾄﾗﾝｽAｸﾐ	1
26	#02	M8513-512-BA0	TRANSFORMER ASM. B	ﾃﾞﾝｹﾞﾝ ﾄﾗﾝｽBｸﾐ	1
27	#03	M8513-512-CA0	TRANSFORMER ASM. C	ﾃﾞﾝｹﾞﾝﾄﾗﾝｽ Cｸﾐ	1
28		SL-4051091-SC	SCREW M5X0.8 L=10	ﾅﾍﾞｺﾈｼﾞ ｾﾑｽ M5X0.8 L=10	4
29		M1012-512-000	CABLE COVER	ｿｸｾﾝ ｶﾊﾞｰ	1
30		M8514-512-0A0	RECTIFIER ASM.	ｾｲﾘｭｳｷ ｸﾐ	1
31		SL-4041091-SC	SCREW M4 X 10	ﾅﾍﾞｺﾈｼﾞ ｾﾑｽ M4X0.7 L=10	3
32		M8540-512-0A0	AC POWER SOURCE TRUNK CORD ASM	ACﾃﾞﾝｹﾞﾝ ﾁｭｳｹｲｺｰﾄﾞ ｸﾐ	1
33		HK-0266500-60	TERMINAL BASE	ﾀﾝｼﾀﾞｲ	1
34		HK-0266500-20	TERMINAL BASE 2P	ﾀﾞﾝｼﾀﾞｲ 2P	1
35		SL-4041281-SC	SCREW M4 L=12	ﾅﾍﾞｺﾈｼﾞ ｾﾑｽ M4 L=12	4
36		M8541-512-0A0	SENSOR SIGNALING CORD ASM.	ｾﾝｻｰ ｼﾝｺﾞｳｺｰﾄﾞ ｸﾐ	1
37		M8597-512-0A0	SENSOR TRUNK CORD ASM.	ｾﾝｻｰ ﾁｭｳｹｲｹｰﾌﾞﾙ ｸﾐ	1
38		M8591-510-0A0	X PULSE MOTOR TRUNK CORD ASM.	Xﾊﾟﾙｽﾓｰﾀｰﾁｭｳｹｲｹｰﾌﾞﾙ ｸﾐ	1
39		M8592-510-0A0	Y PULSE MOTOR TRUNK CORD ASM.	Yﾊﾟﾙｽﾓｰﾀｰﾁｭｳｹｲｹｰﾌﾞﾙ ｸﾐ	1
40		M8595-510-0A0	CLUTCH BRAKE TRUNK CORD ASM.	ｸﾗｯﾁﾌﾞﾚｰｷﾁｭｳｹｲｹｰﾌﾞﾙ ｸﾐ	1
41		M8592-512-0A0	SOLENOID TRUNK CORD ASM.	ｴﾝｰﾊﾞﾙﾌﾞ ﾁｭｳｹｲ ｹｲﾌﾞﾙ ｸﾐ	1
42		M8561-512-0A0	PEDAL SWITCH CORD ASM.	ﾍﾟﾀﾞﾙｽｲｯﾁ ｺｰﾄﾞｸﾐ	1

Note(注記) #01..... For 190V~250V　　190V~250V用

#02..... For 100V~130V　　100V~130V用

#03..... For export 220V~440V　　220V~440V輸出用

From the library of: Superior Sewing Machine & Supply LLC

21. PEDAL & ACCESSORIES COMPONENTS

ペダル・付属品関係

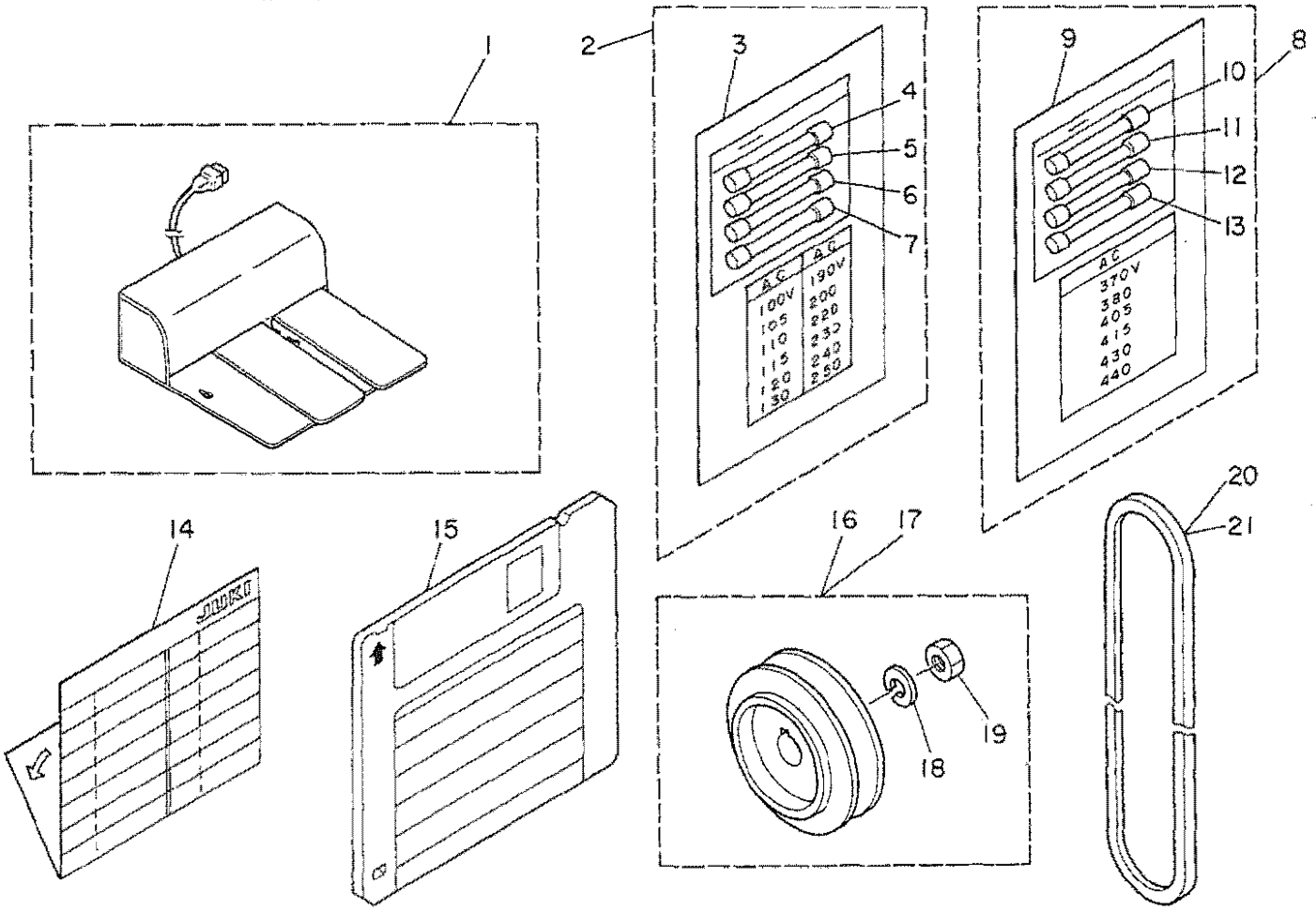

REF.NO.	NOTE	PART NO.	DESCRIPTION	ヒンメイ	AMT.
1		M8590-513-0A0	PEDAL SWITCH ASM.	ﾍﾟﾀﾞﾙｽｲｯﾁ ｸﾐ	1
2	#01	M8599-510-0A0	ACCESSORIES	ﾌｿﾞｸﾋﾝ ｸﾐ	1
3		M3010-110-B00	VOLTAGE SHEET	ﾃﾞﾝｱﾂﾋｮｰｼﾞﾌﾀﾞ	(1)
4		E9629-252-000	FUSE 5A	ﾋｭｰｽﾞ 5A	(1)
5		HF-0014007-00	FUSE 7A	ﾀｲﾑﾗｸﾞﾋｭｰｽﾞ 7A	(1)
6		E9672-452-000	FUSE 3A	ﾋｭｰｽﾞ 3A	(1)
7		E9612-601-000	FUSE 2A	ｶﾞﾗｽｶﾝ ﾋｭｰｽﾞ	(1)
8	#02	M8599-510-0AB	ACCESSORIES	ﾌｿﾞｸﾋﾝ ｸﾐ	1
9		M3006-510-000	VOLTAGE SHEET	ﾃﾞﾝｱﾂﾋｮｳｼﾞﾌﾀﾞ	(1)
10		E9629-252-000	FUSE 5A	ﾋｭｰｽﾞ 5A	(1)
11		HF-0014007-00	FUSE 7A	ﾀｲﾑﾗｸﾞﾋｭｰｽﾞ 7A	(1)
12		E9672-452-000	FUSE 3A	ﾋｭｰｽﾞ 3A	(1)
13		E9612-601-000	FUSE 2A	ｶﾞﾗｽｶﾝ ﾋｭｰｽﾞ	(1)
14		M3004-510-000	PATTERN RECORD SHEET	ﾊﾟﾀｰﾝｷﾛｸｼｰﾄ	1
15	#03	M9650-513-000	FLOPPY DISK A	ｻｰﾋﾞｽ ﾃﾞｨｽｸ A	1
16	#05	MTS-P00950A0	MOTOR PULLEY ASM. P.C.D. 95	ﾓｰﾀﾌﾟｰﾘ P.C.D 95 ｸﾐ	1
17	#06	MTS-P00800A0	MOTOR PULLEY ASM. P.C.D. 80	ﾓｰﾀﾌﾟｰﾘ P.C.D 80 ｸﾐ	1
18		WS-1002560-KR	SPRING WASHER 10X18X2.5	ﾊﾞﾈｻﾞｶﾞﾈ 10X18X2.5	(1)
19		NM-6550815-SF	NUT	ﾅｰﾄﾙﾅｯﾄ	(1)
20	#06	MTJ-VM005000	V-BELT, 50 INCH	Vﾍﾞﾙﾄ 50ｲﾝﾁ	1
21	#05	MTJ-VM005200	V BELT 60HZ 52INCH	Vﾍﾞﾙﾄ 52ｲﾝﾁ	1

Note(注記) #01..... For domestic use (200V) 国内用 (200V)

#02..... For export (380V~440V) 輸出用 (380V~440V)

#03..... Floppy disk in service pattern ｻｰﾋﾞｽﾊﾟﾀｰﾝ入 ﾌﾛｯﾋﾟｰﾃﾞｨｽｸ

#04..... For 50 Hz 50Hz用

#05..... For 60 Hz 60 Hz用

From the library of: Superior Sewing Machine & Supply LLC

糸立装置関係

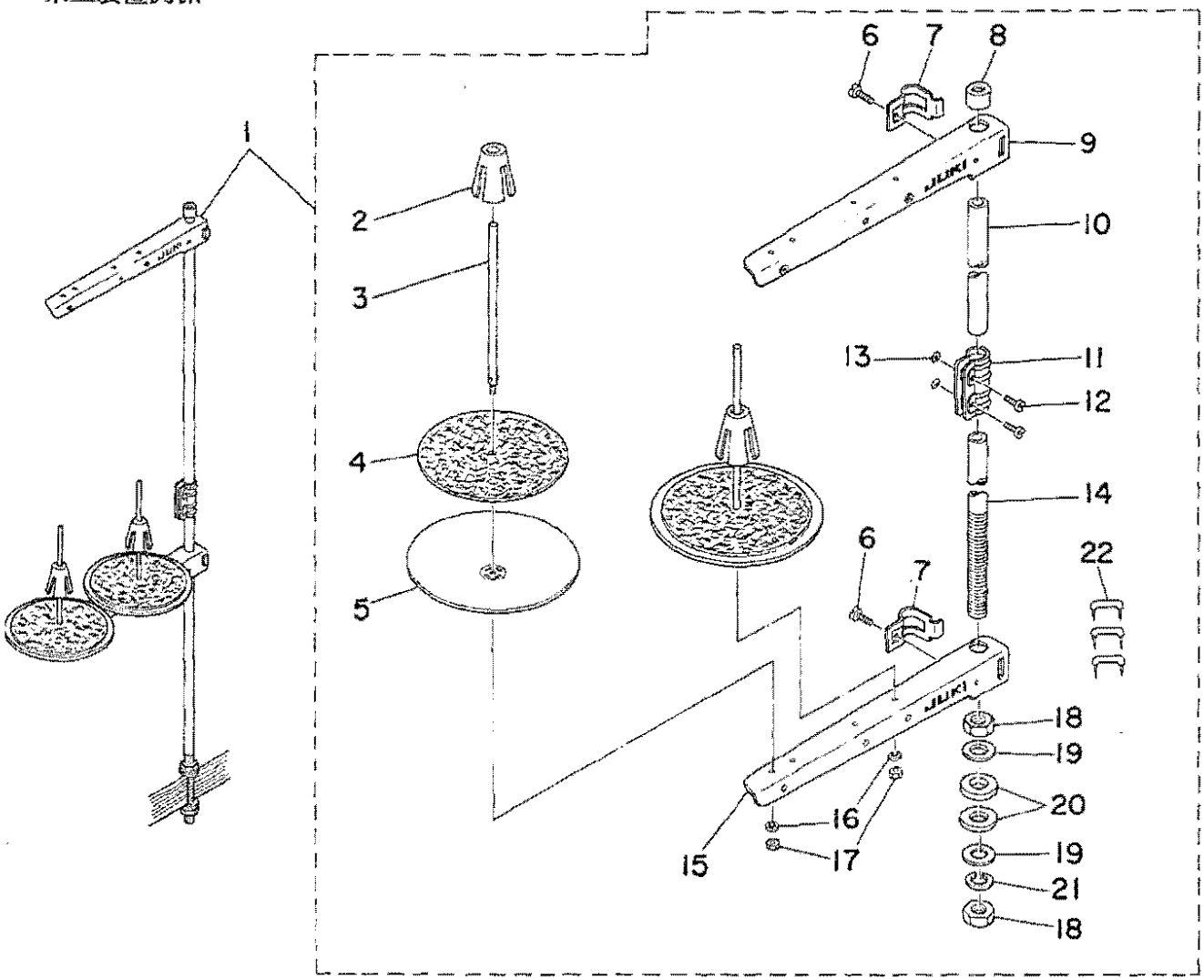

REF.NO.	NOTE	PART NO.	DESCRIPTION	ヒンメイ	AMT.
1		111-81559	THREAD STAND ASM.	ｲﾄﾀﾃ ｿｳﾁ ｸﾐ	1
2		111-81906	SPOOL RETAINER	ｲﾄﾏｷ ﾌﾚﾄﾞﾒ	(2)
3		B3320-704-L00-A	SPOOL PIN	ｲﾄﾏｷｳｹﾎﾞｳ	(2)
4		B3311-012-000	SPOOL REST CUSHION	ｲﾄﾏｷｳｹｻﾞ	(2)
5		111-81807	SPOOL REST	ｲﾄﾏｷｳｹｻﾞﾗ	(2)
6		SM-6061610-SC	SCREW M6 L=16	ﾋﾗｺﾈｼﾞ M6 L=15	(2)
7		B3318-704-L00-A	THREAD GUIDE ARM JOINT	ｲﾄﾀﾃｳﾃﾞ ｼﾒｶﾅｸﾞ	(2)
8		B3311-704-000	SPOOL REST ROD RUBBER CAP	ｲﾄﾀﾃﾎﾞｰ ﾎｺﾞｺﾞﾑ	(1)
9		111-81757	THREAD GUIDE ASM.	ｲﾄﾀﾃｳﾃﾞB ｸﾐ	(1)
10		111-81609	SPOOL REST ROD, UPPER	ｲﾄﾀﾃﾎﾞｳ ｳｴ	(1)
11		B3305-704-000-A	SPOOL REST ROD JOINT	ｲﾄﾀﾃﾎﾞｰﾂｷﾞﾃ	(1)
12		SM-4051405-SE	SCREW M5X0.8 L=14	ﾅﾍﾞｺﾈｼﾞ M5X0.8 L=14	(2)
13		NM-6050001-SE	NUT M5X0.8	ﾛｯｶｸﾅｯﾄ M5X0.8 1ｼｭ	(2)
14		111-81500	SPOOL REST ROD, LOWER	ｲﾄﾀﾃﾎﾞｳ ｼﾀ	(1)
15		111-81708	SPOOL REST ARM	ｲﾄﾀﾃｳﾃﾞ B	(1)
16		WS-0510002-KN	SPRING WASHER 5.1X8.5X1.3	ﾊﾞﾈｻﾞｶﾞﾈ 5.1X9.2X1.3	(2)
17		NM-6050001-SE	NUT M5X0.8	ﾛｯｶｸﾅｯﾄ M5X0.8 1ｼｭ	(2)
18		B3317-704-000	NUT C15	ｲﾄﾀﾃﾎﾞｰ ﾄﾒﾅｯﾄ	(2)
19		WP-1702600-SO	WASHER 17X30X2.6	ﾋﾗｻﾞｶﾞﾈ 17X30X2.6	(2)
20		D3310-555-D00	RUBBER WASHER	ｲﾄﾀﾃﾎﾞｰ ﾎﾞｰｼﾝｺﾞﾑ	(2)
21		WS-1643202-KR	SPRING WASHER	ﾊﾞﾈｻﾞｶﾞﾈ 16.4X26.6X3.2	(1)
22		MA0-11532000	STAPLE	ｺｰﾄﾞ ｽﾃｯﾌﾟﾙ	(3)

From the library of: Superior Sewing Machine & Supply LLC

PGM－1

1. FRAME & DEVICE COMPONENTS

本体・装置関係

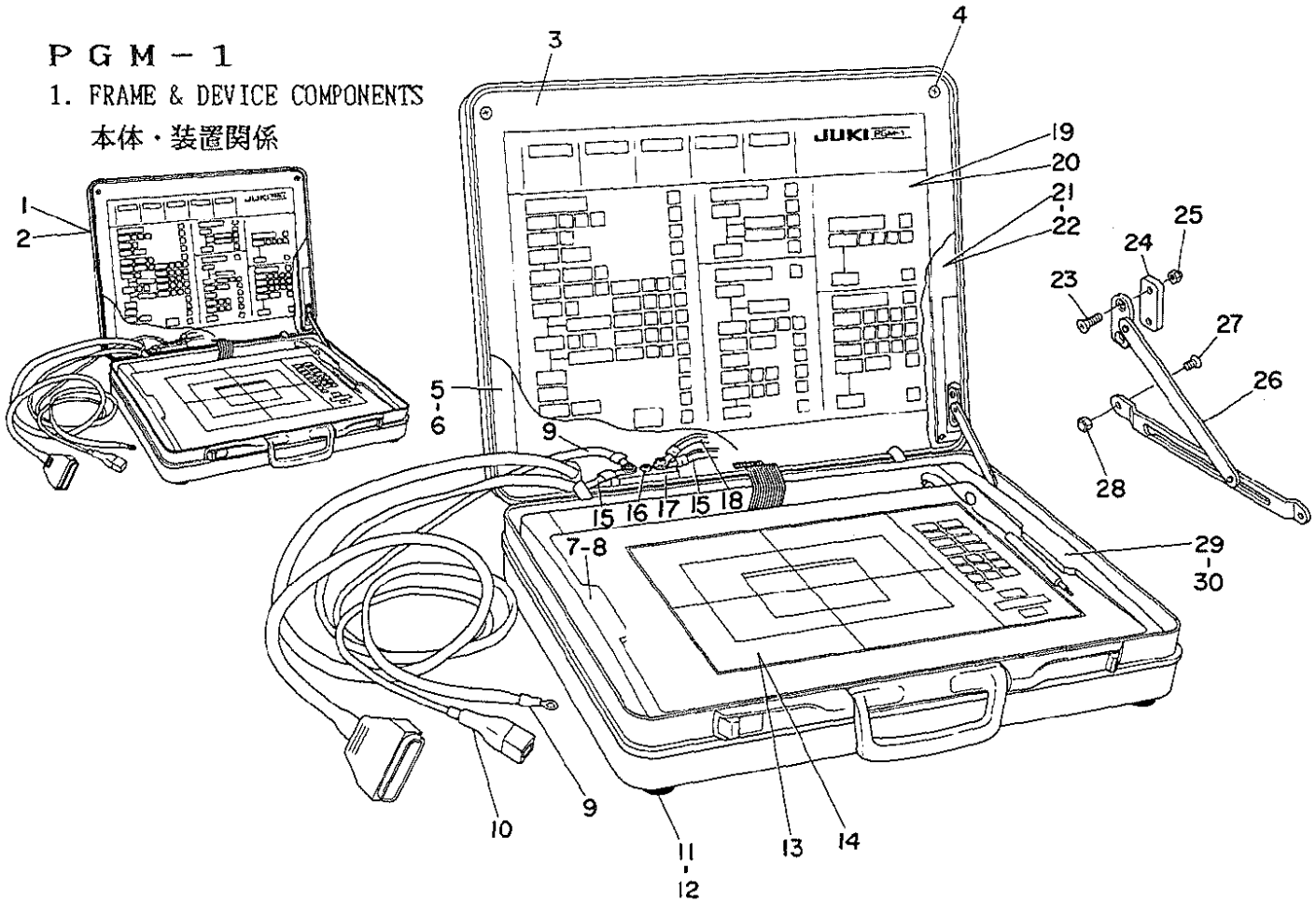

REF.NO.	NOTE	PART NO.	DESCRIPTION	ヒンメイ	AMT.
1	#01	M0011-520-0A0	PGM-1 PROGRAMMING DEVICE	MC-520 ｶﾝｾｲﾋﾝ	1
2	#02	M0011-520-0AA	PGM-1 PROGRAMMING DEVICE	MC-520 ｶﾝｾｲﾋﾝ	1
3		M1012-520-000	PANEL	ｹｼｮｳﾊﾟﾈﾙ	1
4		SM-0030801-SA	SCREW M3X0.8 L=8	ﾄﾗｽｺﾈｼﾞ M3X0.8 L=	4
5		M1003-520-000	PANEL MOUNT ANGLE, LEFT	ﾊﾟﾈﾙﾏｳﾝﾄｱﾝｸﾞﾙ (ﾋﾀﾞﾘ)	1
6		SM-0030801-SA	SCREW M3X0.8 L=8	ﾄﾗｽｺﾈｼﾞ M3X0.8 L=	3
7		M1009-520-000	DIGITIZER MOUNT, LEFT	ﾃﾞｼﾞﾀｲｻﾞ ﾏｳﾝﾄ (ﾋﾀﾞﾘ)	1
8		SM-0041201-SA	SCREW M4X0.7 L=12	ﾄﾗｽｺﾈｼﾞ M4X0.7 L=12	4
9		M8505-520-0A0	GROUND WIRE ASM. A	ｱｰｽｺｰﾄﾞ Aｸﾐ	1
10		M8502-520-0A0	POWER SOURCE CORD ASM.	ﾃﾞﾝｹﾞﾝｹｰﾌﾞﾙ ｸﾐ	1
11		GES-13008000	CLOTH PRESSER RUBBER	ﾇﾉｵｻｴｺﾞﾑ	4
12		SL-4030881-SF	SCREW M3 X 8	ﾅﾍﾞｺﾈｼﾞ ｾﾑｽ M3 L=8	4
13	#03	M2002-520-000	DIGITIZER SHEET (JAPANESE)	ﾃﾞｼﾞﾀｲｻﾞ ｼｰﾄ (ﾜﾌﾞﾝ)	1
14	#04	M2002-520-00A	DIGITIZER SHEET	ﾃﾞｼﾞﾀｲｻﾞｰｼｰﾄ (3ｶｺｸｺﾞ)	1
15		M8512-520-0A0	GROUND WIRE ASM. B	ｱｰｽｺｰﾄﾞ Bｸﾐ	2
16		SL-4040891-SC	SCREW M4X8	ﾅﾍﾞｺﾈｼﾞ ｾﾑｽ M4X0.7 L=8	3
17		M1013-520-000	GROUND WIRE TERMINAL	ｱｰｽﾀｰﾐﾅﾙ	1
18		M8513-520-0A0	GROUND WIRE ASM. C	ｱｰｽｺｰﾄﾞ Cｸﾐ	1
19	#03	M2001-520-000	OPERATION PANEL SHEET,JAPANESE	ﾆｭｳﾘｮｸ ﾋｮｳｼﾞｼｰﾄ (ﾜﾌﾞﾝ)	1
20	#04	M2001-520-00A	OPERATION PANEL SHEET	ﾆｭｳﾘｮｸﾋｮｳｼﾞｼｰﾄ(3ｶｺｸｺﾞ)	1
21		M1002-520-000	PANEL MOUNT ANGLE, RIGHT	ﾊﾟﾈﾙﾏｳﾝﾄｱﾝｸﾞﾙ (ﾐｷﾞ)	1
22		SM-0030801-SA	SCREW M3X0.8 L=8	ﾄﾗｽｺﾈｼﾞ M3X0.8 L=	3
23		SM-1031201-SC	SCREW M3X0.5 L=12	ｻﾗｺﾈｼﾞ M3X0.5 L=12	2
24		M1011-520-000	SLIDE STAY WASHER	ｽﾗｲﾄﾞｽﾃｰ ｻﾞｶﾞﾈ	1
25		NM-7030510-SA	NUT M3	ﾛｯｶｸﾌｸﾛﾅｯﾄ M3	2
26		M1010-520-000	SLIDE STAY	ｽﾗｲﾄﾞｽﾃｰ	1
27		SM-0030601-SA	SCREW M3X0.5 L=6	ﾄﾗｽｺﾈｼﾞ M3X0.5 L=6	2
28		NM-7030510-SA	NUT M3	ﾛｯｶｸﾌｸﾛﾅｯﾄ M3	2
29		M1008-520-000	DIGITIZER MOUNT, RIGHT	ﾃﾞｼﾞﾀｲｻﾞ ﾏｳﾝﾄ (ﾐｷﾞ)	1
30		SM-0041201-SA	SCREW M4X0.7 L=12	ﾄﾗｽｺﾈｼﾞ M4X0.7 L=12	4

Note(注記) #01..... For domestic use 国内用

#02..... For export 輸出用

#03 For Japanese 和文用

From the library of: Superior Sewing Machine & Supply LLC

ＬＥＤ　基板関係

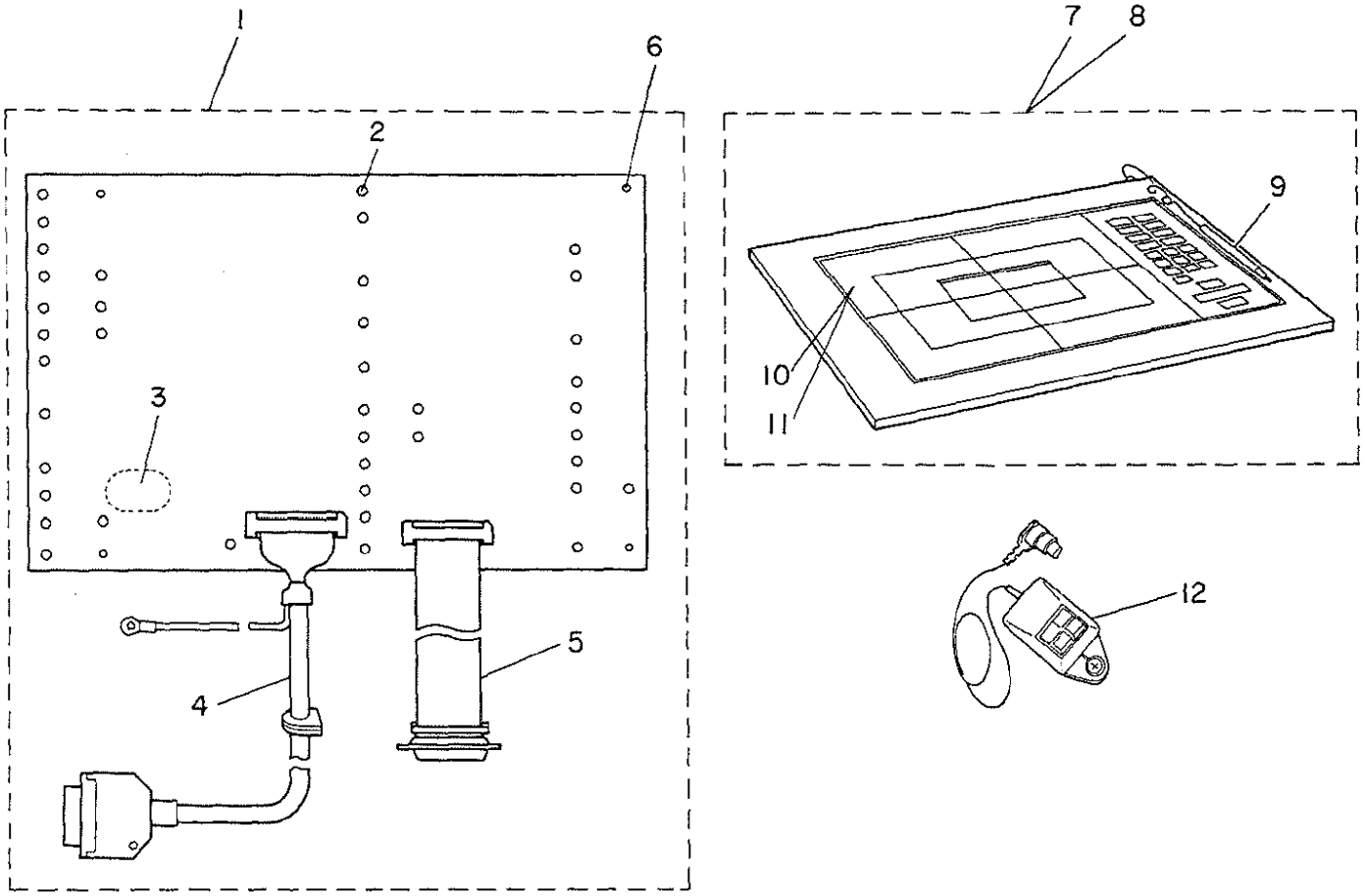

REF.NO.	NOTE	PART NO.	DESCRIPTION	ヒンメイ	AMT.
1		M8601-520-0A0	LED CIRCUIT BOARD ASM.	LEDｷﾊﾞﾝ ｸﾐ	1
2		HG-0033500-00	DIODE	ﾀﾞｲｵｰﾄﾞ	(40)
3		HX-0016100-00	BUZZER	ﾌﾞｻﾞｰ	(1)
4		M8507-520-0A0	SIGNALING CORD ASM. A	ｼﾝｺﾞｳｹｰﾌﾞﾙ Aｸﾐ	(1)
5		M8509-520-0A0	SIGNALING CORD ASM. B	ｼﾝｺﾞｳｹｰﾌﾞﾙ Bｸﾐ	(1)
6		SL-4030681-SC	COMBINATION SCREW M3 X 6	ﾅﾍﾞﾈｼﾞ M3X0.5 L=6 ｾﾑｽ	4
7	#01	M8503-520-0B0	DIGITIZER ASM.	ﾃﾞｼﾞﾀｲｻﾞ ｸﾐ	1
8	#02	M8503-520-0C0	DIGITIZER ASM.	ﾃﾞｼﾞﾀｲｻﾞ ｸﾐ	1
9		M9602-520-000	STYLUS PEN	ｽﾀｲﾗｽﾍﾟﾝ	(1)
10	#01	M2002-520-000	DIGITIZER SHEET (JAPANESE)	ﾃﾞｼﾞﾀｲｻﾞ ｼｰﾄ (ﾜﾌﾞﾝ)	(1)
11	#02	M2002-520-00A	DIGITIZER SHEET	ﾃﾞｼﾞﾀｲｻﾞｰｼｰﾄ (3ｶｺｸｺﾞ)	(1)
12	#03	M9603-520-000	TWO BUTTON CURSOR	ﾂｰﾎﾞﾀﾝ ｶｰｿﾙ	1

Note(注記) #01..... For Japanese　和文用
#02..... For English & German & French　英独仏文用
#03..... Special order part　特別注文部品

From the library of: Superior Sewing Machine & Supply LLC

AMS－210B (WITH INVERTING DEVICE)(For T,J)
AMS－210B 反転装置関係 (T,J仕様)

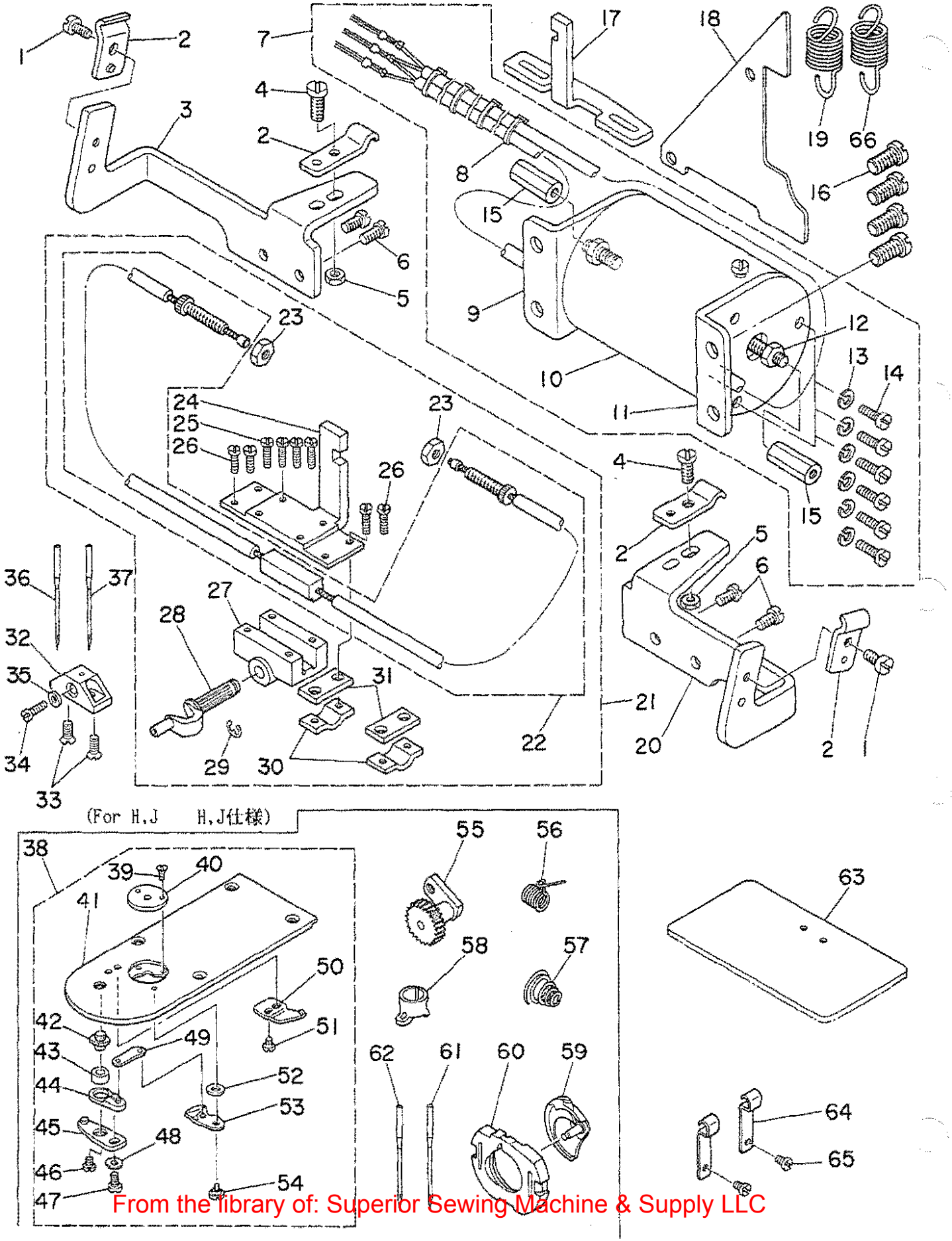

From the library of: Superior Sewing Machine & Supply LLC

1		SS-7110710-SP	SCREW 11/64-40 L=7	ﾏﾙﾋﾗﾈｼﾞ 11/64-40 L=7	2
2		D3164-555-B00	OUTER PRESSER PLATE	ｱｳﾀｰｵｻｴ	4
3		B4309-210-000	WIRE MOUNTING BRACKET, LEFT	ﾊﾝﾃﾝﾜｲﾔ ｵｻｴﾄﾘﾂｹｲﾀ ﾋﾀﾞﾘ	1
4		SS-7111410-SP	SCREW 11/64-40 L=14	ﾏﾙﾋﾗﾈｼﾞ 11/64-40 L=14	2
5		NS-6620310-SP	NUT 3/16-32	ﾛｯｶｸﾅｯﾄ 3/16-32	2
6		SS-7110840-SP	SCREW 11/64-40 L=7.8	ﾏﾙﾋﾗﾈｼﾞ 11/64-40 L=7.8	4
7		B4311-210-0A0	SOLENOID ASM.	ﾊﾝﾃﾝﾏｸﾞﾈｯﾄ ｸﾐ	1
8		EA-9500B01-00	CABLE BAND	ｿｸｾﾝﾊﾞﾝﾄﾞ	(4)
9		B4313-210-000	SOLENOID SUPPORTER, B	ﾊﾝﾃﾝﾏｸﾞﾈｯﾄ ﾄﾘﾂｹﾀﾞｲ B	(1)
10		B4311-210-000-A	SOLENOID	ﾊﾝﾃﾝﾏｸﾞﾈｯﾄ	(1)
11		B4312-210-000	SOLENOID SUPPORTER, A	ﾊﾝﾃﾝﾏｸﾞﾈｯﾄ ﾄﾘﾂｹﾀﾞｲ A	(1)
12		NS-6150430-SP	NUT 15/64-28	ﾛｯｶｸﾅｯﾄ 15/64-28	(2)
13		WS-0451040-KP	SPRING WASHER	ﾊﾞﾈｻﾞｶﾞﾈ 4.5X8.5X1	(6)
14		SM-6041210-SC	SCREW M4X0.7 L=12	ﾋﾗｺﾈｼﾞ M4X0.7 L=12	(6)
15		B4308-210-000-A	WIRE NUT	ﾜｲﾔｰﾅｯﾄ	(2)
16		SS-7151210-SP	SCREW 15/64-28 L=12	ﾏﾙﾋﾗﾈｼﾞ 15/64-28 L=12	4
17		B4307-210-000	OUTSIDE SLIDE PLATE	ﾊﾝﾃﾝﾖｳｿﾄｵｻｴ ｽﾍﾞﾘｲﾀ	1
18		B4316-210-000	BELT COVER LID	ﾊﾝﾃﾝﾖｳﾍﾞﾙﾄｶﾊﾞｰﾌﾀ	1
19		B4315-210-000	SPRING, B	ﾇﾉｵｻｴﾊﾞﾈ B	2
20		B4310-210-000	WIRE MOUNTING BRACKET, RIGHT	ﾊﾝﾃﾝﾜｲﾔ ｵｻｴﾄﾘﾂｹｲﾀ ﾐｷﾞ	1
21		B4304-210-0A0	INTERMEDIATE PRESSER ASM.	ﾊﾝﾃﾝﾖｳﾅｶｵｻｴ ｽﾍﾞﾘｲﾀ ｸﾐ	1
22		B4305-210-0A0	WIRE ASM.	ﾊﾝﾃﾝﾖｳﾜｲﾔ ｸﾐ	(1)
23		NS-6620310-SP	NUT 3/16-32	ﾛｯｶｸﾅｯﾄ 3/16-32	(2)
24		B4304-210-000	INTERMEDIATE PRESSER	ﾊﾝﾃﾝﾖｳﾅｶｵｻｴ ｽﾍﾞﾘｲﾀ	(1)
25		SS-6081210-SP	SCREW 1/8-44 L=12	ﾋﾗﾈｼﾞ 1/8-44 L=12	(4)
26		SS-6080810-SP	SCREW 1/8-44 L= 8.0	ﾋﾗﾈｼﾞ 1/8-44 L=8	(4)
27		B4303-210-000	TURN AROUND CRANK BEARING	ﾊﾝﾃﾝ ｸﾗﾝｸ ｼﾞｸｳｹ	(1)
28		B4301-210-000	TURN AROUND CRANK SHAFT	ﾊﾝﾃﾝ ｸﾗﾝｸ ｼﾞｸ	(1)
29		RE-0400000-K0	E-RING	Eｶﾞﾀﾄﾒﾜ 4	(1)
30		D2568-L8W-B00	LIFTING DRIVE PLATE	ｱｳﾀｰｵｻｴ (ﾏｴ)	(2)
31		D2569-L8W-B00	OUTER SUPPORT PLATE	ｱｳﾀｰｳｹｲﾀ	(2)
32		B4314-210-000	INTERMEDIATE PRESSER BASE	ﾊﾝﾃﾝﾖｳﾅｶｵｻｴ ﾄﾘﾂｹﾀﾞｲ	1
33		SS-1090750-SP	SCREW 9/64-40 L=7	ｼﾀﾒｽﾄﾘﾂｹﾈｼﾞ	2
34		SS-7060610-SP	SCREW 3/32-56 L= 5.5	ﾏﾙﾋﾗﾈｼﾞ 3/32-56 L=5.5	1
35		WP-0250516-SD	WASHER 2.5X6X0.5	ﾋﾗｻﾞｶﾞﾈ 2.5X6X0.5	1
36	#01	MDP-170B1400	NEEDLE DPX17 #14	ﾊﾘ DPX17 #14	1
37	#02	MC-3720009-00	NEEDLE 135X17 #90	ﾊﾘ SY3355 90	1
38		B2425-210-0AB	NEEDLE PLATE ASM.	ﾊﾘｲﾀ ｸﾐ (Hｼｮｳ)	1
39		SS-1060210-TP	SCREW 3/32-56 L=2.2	ｻﾗﾈｼﾞ 3/32-56 L=2.2	(2)
40		B2426-210-00B	NEEDLE PLATE NEEDLE HOLE GUIDE	ﾊﾘｱﾅｶﾞｲﾄﾞ	(1)
41		B2425-210-000	NEEDLE PLATE	ﾊﾘｲﾀ	(1)
42		B2417-280-000	MOVING KNIFE DRIVING LEVER	ｲﾄｷﾘ ﾚﾊﾞｰｼﾞｸ	(1)
43		B2416-280-000	COLLAR	ｲﾄｷﾘ ﾚﾊﾞｰﾘﾝｸﾞ	(1)
44		B2415-280-0A0	MOVING KNIFE DRIVING LEVER ASM.	ｲﾄｷﾘ ﾚﾊﾞｰ (ｼｮｳ) ｸﾐ	(1)
45		B2414-280-0A0	MOVING KNIFE DRIVING LEVER ASM.	ｲﾄｷﾘ ﾚﾊﾞｰ (ﾀﾞｲ) ｸﾐ	(1)
46		SS-6110430-TP	SCREW 11/64-40 L= 4.0	ﾋﾗﾈｼﾞ 11/64-40 L=4	(1)
47		SS-7110740-TP	SCREW 11/64-40 L=7	ﾏﾙﾋﾗﾈｼﾞ 11/64-40 L=7	(1)
48		WP-0450846-SP	WASHER	ﾋﾗｻﾞｶﾞﾈ	(1)
49		B2418-280-000	MOVING KNIFE CONNECTING LINK	ﾄﾞｳﾒｽ ﾘﾝｸ	(1)
50		B2424-210-000	COUNTER KNIFE	ｺﾃｲﾒｽ	(1)
51		SS-7090410-SP	SCREW 9/64-40 L= 3.5	ﾏﾙﾋﾗﾈｼﾞ 9/64-40 L=3.5	(2)
52		B2423-280-00C	WASHER	ﾄﾞｰﾒｽ ｻﾞｶﾞﾈ C	(1)
53		B2421-210-0A0	MOVING KNIFE ASM.	ﾄﾞｰﾒｽ ｸﾐ	(1)
54		SD-0600281-TP	HINGE SCREW H=6 W=2.7	ﾀﾞﾝﾈｼﾞ H=6 W=2.7	(1)
55		D1805-MLB-H00	OSCILLATING ROCK SHAFT	ｵｵﾌﾘｺ	1
56		D3112-L4B-B00	TAKE-UP SPRING (HEAVY)	ｲﾄﾄﾘﾊﾞﾈ (ｷﾔﾝﾄﾝ)	1
57		B3129-053-000	TENSION SPRING	ｲﾄﾁｮｰｼﾊﾞﾈ	1
58		B1406-210-000	THREAD GUIDE	ﾊﾘﾎﾞｳｲﾄｱﾝﾅｲ (ｱﾂﾓﾉ)	1
59		D1818-282-N00	SHUTTLE	ﾅｶｶﾞﾏ (ﾌﾄﾊﾘ ﾖｳ)	1
60		D1817-282-N00	SHUTTLE RACE RING, THICK NEEDLE	ﾅｶｶﾞﾏ ｵｻｴ (ﾌﾄﾊﾘ ﾖｳ)	1
61		MDP-17081800	NEEDLE DPX17 #18	ﾊﾘ DPX17 #18	1
62	#02	MC-3720011-00	NEEDLE 135X17 #110	ﾊﾘ SY3355 110	1
63		B4317-210-0X0	INTERMEDIATE PRESSER BLANK	ﾊﾝﾃﾝﾖｳﾅｶｵｻｴ ﾌﾞﾗﾝｸ	1
64		B4323-210-000	WIRE HOLDER	ﾜｲﾔｰｵｻｴｶﾅｸﾞ	2
65		SS-7110840-SP	SCREW 11/64-40 L=7.8	ﾏﾙﾋﾗﾈｼﾞ 11/64-40 L=7.8	2
66		B4322-212-000	SPRING C	ﾇﾉｵｻｴ ﾊﾞﾈ (C)	1

Note(注記) #01..... Except JE　　JEを除く

#02..... For JE　　JE用

*All parts other than above are those of model AMS-210A.

上記以外の部品は AMS-210A と共通です。

From the library of: Superior Sewing Machine & Supply LLC

Part No. 品番	Page 頁	Ref. No.
BP-3000000-00	24	15
BP-3000000-00	24	18
BP-3000000-00	24	21
BP-3000000-00	24	24
BP-3000000-00	24	32
BP-3000000-00	24	45
BP-6000000-00	24	36
B1103-210-000	4	52
B1104-210-000	2	6
B1105-210-0A0	2	1
B1106-210-0A0	4	20
B1107-210-0B0	4	42
B1108-210-000	2	55
B1109-210-000	2	54
B1110-210-000	2	56
B1111-210-000	4	46
B1111-232-000	2	30
B1112-210-000	2	57
B1113-210-000	2	58
B1115-232-0A0	2	14
B1115-232-0A0	2	35
B1115-232-000	2	16
B1115-232-000	2	38
B1116-210-00B	4	57
B1116-210-000	4	48
B1116-210-000	32	12
B1117-210-000	2	3
B1118-210-000	2	49
B1121-210-0A0	4	37
B1122-210-000	4	47
B1122-280-000	2	34
B1123-210-000	18	21
B1123-280-000	2	22
B1124-210-000	18	22
B1124-280-000	2	44
B1125-210-000	4	30
B1125-280-000	2	48
B1126-210-000	2	8
B1126-552-000	2	42
B1127-280-000	2	25
B1128-210-000	4	25
B1130-210-000	4	28
B1131-210-0A0	4	32
B1136-210-000	4	26
B1137-210-000	4	31
B1140-210-000	4	40
B1150-490-000	2	12
B1201-210-000	6	39
B1202-210-000	6	25
B1203-210-000	6	26
B1203-280-000	6	5
B1204-210-0A0	6	35
B1205-210-0A0	6	44
B1205-210-0B0	6	40
B1206-210-000	6	23
B1207-205-0A0	6	50
B1208-210-0A0	6	45
B1209-210-0A0	6	47
B1223-771-000	6	10
B1401-210-000	6	13
B1402-210-000	6	12
B1403-280-000	6	16
B1404-280-000	6	7
B1405-012-000	2	19
B1405-210-000	6	18
B1406-210-000	44	58
B1411-552-0A0	6	14
B1411-804-B00	12	9
B1411-804-B00	12	39
B1411-804-C00	6	6
B1414-232-000	6	11
B1419-026-000	24	2
B1501-127-000	10	5
B1501-210-000	8	33
B1502-210-0AB	8	30
B1502-210-00A	30	1
B1502-541-000	10	6
B1504-210-000	8	13
B1505-210-000	8	29
B1506-210-000	8	24
B1507-210-000	8	2
B1507-552-000	10	17
B1508-210-0A0	8	1
B1508-210-000	8	7
B1509-210-000	8	17
B1509-227-000	10	1
B1510-227-000	10	3
B1511-210-000	8	26
B1511-555-000	10	2
B1513-210-000	8	10
B1515-210-000	8	8
B1520-212-000	8	11
B1601-206-000	10	8
B1601-210-00B	28	4
B1601-210-00C	28	5
B1601-210-00D	28	6
B1601-210-00E	28	28
B1602-206-0A0	10	47
B1603-210-0A0	10	10
B1606-210-000	10	39
B1607-210-000	10	11
B1609-210-000	10	43
B1610-210-0A0	10	34
B1611-210-000	10	4
B1612-206-000	10	36
B1615-206-0A0	10	14
B1616-206-000	10	60
B1616-210-000	10	26
B1617-210-000	10	27
B1618-206-000	10	24
B1619-210-0A0	10	30
B1622-210-000	10	22
B1622-210-000	16	26
B1622-210-000	16	30
B1625-206-000	10	15
B1626-210-000	10	37
B1627-210-000	10	32
B1628-210-0A0	10	48
B1628-210-000	10	53
B1629-210-000	10	51
B1630-210-000	10	50
B1631-210-000	10	54
B1633-210-000	10	42
B1701-210-000	8	21
B1702-210-000	8	34
B1703-210-0A0	8	20
B1704-210-000	8	15
B1705-210-0A0	8	16
B1707-210-000	8	19
B1802-210-0A0	12	21
B1803-210-000	12	40
B1804-280-0A0	12	34
B1805-205-000	12	3
B1805-980-000	12	29
B1808-205-000	12	2
B1808-980-000	12	38
B1811-205-0AA	12	37
B1812-205-000	12	6
B1813-980-000	12	8
B1814-980-000	12	11
B1815-980-000	12	12
B1816-280-000	20	32
B1816-280-000	22	26
B1816-280-000	30	29
B1817-205-0A0	12	4
B1818-205-000	12	5
B1819-280-000	12	19
B1820-280-000	12	17
B1821-280-000	12	14
B1823-280-000	12	16
B1828-205-0A0	12	1
B1901-280-0A0	6	2
B1901-280-0B0	6	1
B1901-280-0B0	6	3
B1903-552-000	6	8
B1905-541-B00	6	4
B2101-210-0A0	14	30
B2101-210-000	14	34
B2102-210-000	14	37
B2103-210-000	14	21
B2104-210-000	14	32
B2105-210-000	14	33
B2106-210-0A0	14	23
B2107-210-000	14	29
B2108-210-000	14	26
B2109-210-000	14	18
B2301-210-0A0	16	13
B2301-210-000	16	15
B2302-210-000	16	16
B2302-280-0A0	14	1
B2302-280-000	14	5
B2303-280-000	14	16
B2304-210-0A0	16	42
B2305-210-000	16	20
B2306-210-0A0	16	27
B2306-210-0B0	16	32
B2306-210-000	16	35
B2307-210-000	16	31
B2308-210-000	16	36
B2309-210-000	16	34
B2310-210-000	16	50
B2311-210-000	16	49
B2312-220-000	6	29
B2313-280-000	14	4
B2315-210-0A0	16	40
B2401-205-000	6	27
B2402-210-0A0	16	44
B2402-210-000	16	46
B2403-210-000	16	51
B2404-210-000	16	12
B2405-210-000	16	21
B2406-210-000	16	22
B2407-210-000	16	8
B2408-210-000	16	6
B2409-210-0A0	16	53
B2409-210-000	16	56
B2410-210-000	16	55
B2411-210-000	16	3
B2412-210-000	16	11
B2413-210-000	16	5
B2414-210-000	16	18
B2414-280-0A0	12	50
B2414-280-0A0	44	45
B2415-210-000	16	17
B2415-280-0A0	12	49
B2415-280-0A0	44	44
B2416-280-000	12	48
B2416-280-000	44	43
B2417-280-000	12	47
B2417-280-000	44	42
B2418-280-000	12	54
B2418-280-000	44	49
B2421-205-0A0	12	60
B2421-210-0A0	44	53
B2423-280-00A	12	58
B2423-280-00B	12	59
B2423-280-00C	12	57
B2423-280-00C	44	52
B2424-210-000	12	55
B2424-210-000	44	50
B2425-210-0AB	44	38
B2425-210-0A0	12	43
B2425-210-000	12	46
B2425-210-000	44	41
B2426-210-00A	12	45
B2426-210-00B	44	40
B2426-210-00C	28	7
B2426-210-00D	28	8
B2501-210-0A0	18	1
B2501-210-000	18	18
B2502-210-000	18	7
B2503-210-000	18	8
B2504-210-000	18	33
B2505-210-000	18	40
B2506-210-000	18	26
B2507-210-000	18	17
B2508-210-000	18	15
B2509-210-000	18	27
B2510-210-000	20	29
B2511-210-000	20	20
B2512-210-000	18	39
B2513-210-000	18	28
B2513-210-000	20	31
B2514-210-000	18	35
B2514-210-000	20	34
B2515-210-000	18	37
B2516-210-000	20	6
B2516-210-000	20	53
B2517-210-000	20	43
B2518-210-000	20	42
B2519-210-000	18	6
B2520-210-000	18	5
B2521-210-000	18	11
B2522-210-000	18	3
B2523-210-000	20	12
B2524-210-0A0	20	22
B2526-210-000	20	35
B2528-210-000	20	38
B2529-210-0AB	20	47
B2529-210-0BB	20	1
B2529-210-000	20	2
B2529-210-000	20	48
B2530-210-000	20	17
B2531-210-000	20	10
B2532-210-0A0	20	28
B2533-210-000	20	46
B2534-210-000	20	26
B2536-210-000	20	39

From the library of: Superior Sewing Machine & Supply LLC

Part No. 品番	Page 頁	Ref. No.	Part No. 品番	Page 頁	Ref. No.	Part No. 品番	Page 頁	Ref. No.	Part No. 品番	Page 頁	Ref. No.
B2548-280-000	30	14	B2594-210-0A0	28	54	B3541-012-000	24	10	B8204-210-000	32	13
B2549-280-000	30	13	B2702-210-000	14	17	B4004-210-0A0	26	56	B8210-210-000	32	61
B2550-210-0AA	30	3	B2703-210-000	26	55	B4004-210-000	26	61	B8211-210-000	32	60
B2550-210-00A	30	22	B3107-804-000	14	10	B4005-210-0A0	26	25	B8219-125-000	4	50
B2550-212-000	22	22	B3112-761-000	14	6	B4005-210-000	26	29			
B2551-212-0A0	22	27	B3114-232-000	14	11	B4006-210-0A0	26	9	CQ-2020000-00	24	13
B2553-210-B0B	22	30	B3114-771-000	2	46	B4006-210-000	26	10	CQ-2020000-00	24	14
B2553-210-0V0	28	37	B3119-771-000	14	14	B4007-210-000	18	24	CQ-2020000-00	24	31
B2553-210-0W0	28	36	B3120-125-000	14	13	B4008-210-0A0	26	1	CQ-2020000-00	24	35
B2553-210-0X0	28	12	B3123-352-000	2	18	B4008-210-000	26	6	CQ-2020000-00	24	38
B2553-210-0Y0	28	13	B3123-352-000	2	36	B4009-210-000	26	7	CQ-2020000-00	24	52
B2553-210-00B	28	1	B3125-012-000	2	15	B4010-210-000	26	5	CQ-2522000-00	24	43
B2553-210-00C	28	2	B3125-012-000	2	39	B4011-210-000	26	12	CS-079101A-SH	12	31
B2554-210-000	30	35	B3126-012-000	2	17	B4011-210-000	26	28	CS-080081B-SH	12	41
B2555-210-000	30	34	B3126-012-000	2	37	B4011-210-000	26	60	CS-147101A-SH	6	31
B2556-210-0W0	28	9	B3126-012-000	14	8	B4110-210-0A0	26	33	CS-147101A-SH	6	33
B2556-210-0X0	28	10	B3129-053-000	14	12	B4110-210-000	26	47			
B2556-210-0Y0	28	11	B3129-053-000	44	57	B4115-210-0A0	26	37	D1630-555-B00	24	34
B2556-210-00B	28	18	B3132-552-000	14	9	B4120-210-0A0	26	40	D1805-MLB-H00	44	55
B2556-210-00C	28	19	B3201-210-0A0	4	10	B4120-210-000	26	45	D1817-282-N00	44	60
B2556-210-000	22	31	B3203-210-000	4	16	B4130-210-0A0	26	50	D1818-282-N00	44	59
B2557-210-0AA	30	37	B3204-210-000	4	3	B4140-210-0A0	26	53	D2302-L4B-BA0	14	2
B2557-210-0AB	30	36	B3205-210-000	4	1	B4150-210-0A0	26	52	D2430-555-B00	4	12
B2557-210-0A0	28	24	B3206-210-000	4	19	B4170-210-0A0	26	23	D2430-555-B00	16	23
B2557-280-00A	22	2	B3207-210-000	4	13	B4301-210-000	44	28	D2568-L8W-B00	44	30
B2557-280-00A	22	41	B3208-210-000	4	17	B4303-210-000	44	27	D2569-L8W-B00	44	31
B2558-210-0X0	28	14	B3208-280-000	4	11	B4304-210-0A0	44	21	D2590-212-BAK	30	32
B2558-210-0Y0	28	15	B3209-210-000	4	18	B4304-210-000	44	24	D2591-212-BAK	30	33
B2559-210-0X0	28	16	B3210-210-000	4	4	B4305-210-0A0	44	22	D3112-L4B-B00	14	7
B2559-210-0Y0	28	17	B3211-210-000	4	7	B4307-210-000	44	17	D3112-L4B-B00	44	56
B2561-206-000	30	21	B3212-210-000	4	8	B4308-210-000-A	44	15	D3159-555-B00	16	33
B2561-210-000	28	27	B3212-761-000	4	2	B4309-210-000	44	3	D3164-555-B00	44	2
B2562-206-000	30	25	B3213-205-000	6	24	B4310-210-000	44	20	D3310-555-D00	40	20
B2563-206-000	30	8	B3305-704-000-A	40	11	B4311-210-0A0	44	7	D6028-555-B0B	20	4
B2563-210-000	22	12	B3311-012-000	40	4	B4311-210-000-A	44	10	D6028-555-B0B	20	50
B2564-206-000	30	24	B3311-704-000	40	8	B4312-210-000	44	11	D6042-555-B00	8	4
B2564-210-0A0	28	29	B3317-704-000	40	18	B4313-210-000	44	9	D6042-555-B00	10	57
B2564-210-000	28	30	B3318-704-L00-A	40	7	B4314-210-000	44	32	D6042-555-B00	14	38
B2565-206-000	30	10	B3320-704-L00-A	40	3	B4315-210-000	44	19	D6042-555-B00	16	52
B2565-210-000	28	34	B3416-552-000	14	35	B4316-210-000	44	18	D6042-555-B00	20	5
B2566-206-000	30	9	B3501-210-000	24	30	B4317-210-0X0	44	63	D6042-555-B00	20	51
B2566-210-000	28	35	B3502-210-000	24	6	B4322-212-000	44	66	D8113-555-B00	32	40
B2570-212-000	22	34	B3502-280-000	24	51	B4323-210-000	44	64	D8204-555-D00	32	14
B2571-212-000	22	23	B3503-210-000	24	9	B4703-206-000	30	5			
B2572-212-000	22	24	B3504-210-000	24	22	B5070-210-000	28	3	EA-9500B01-00	26	24
B2572-212-000	30	27	B3504-280-000	24	42	B8101-210-0A0	32	16	EA-9500B01-00	26	38
B2573-210-000	22	15	B3505-210-000	24	27	B8101-210-000	32	18	EA-9500B01-00	28	43
B2574-210-000	22	40	B3505-280-000	24	40	B8103-210-000	32	34	EA-9500B01-00	28	52
B2575-212-000	22	4	B3506-210-000	24	59	B8104-552-000	32	17	EA-9500B01-00	44	8
B2576-212-000	22	38	B3507-210-000	24	57	B8105-210-000	32	19	EA-9500B02-00	26	68
B2577-212-000	22	8	B3507-280-000	24	12	B8107-210-000	32	47	E8760-452-F00	26	36
B2578-210-000	22	3	B3508-210-000	8	6	B8108-210-000	32	33	E8760-452-F00	28	48
B2580-212-000	22	6	B3508-210-000	24	20	B8110-552-000	32	26	E8760-452-M00	20	3
B2580-212-000	22	36	B3508-280-000	24	16	B8112-552-000	32	48	E8760-452-M00	20	49
B2580-220-000	30	12	B3509-210-000	24	50	B8114-210-000	32	38	E9612-601-000	39	7
B2581-210-000	22	35	B3509-280-000	24	7	B8125-210-000	32	45	E9612-601-000	39	13
B2582-210-000	22	16	B3509-280-000	24	28	B8126-210-000	32	31	E9628-252-000	36	24
B2583-212-000	22	9	B3509-280-000	24	58	B8150-210-000	32	27	E9629-252-000	39	4
B2583-212-000	22	43	B3515-210-000	2	10	B8151-210-000	32	46	E9629-252-000	39	10
B2585-210-000	22	10	B3516-210-000	24	11	B8152-771-000	32	41	E9646-252-000	33	15
B2586-210-000	22	14	B3517-210-000	24	29	B8153-771-000	32	39	E9672-452-000	39	6
B2587-210-000	28	25	B3518-210-000	24	5	B8180-210-000	32	57	E9672-452-000	39	12
B2588-210-000	28	26	B3518-210-000	24	25	B8201-210-000	32	1			
B2590-210-000	28	22	B3518-280-000	24	56	B8202-205-000	32	5	GBC-02622000	26	67
B2591-210-000	28	23	B3520-210-000	24	1	B8202-210-000	32	3	GBR-01713000	36	10
B2592-210-000	28	21	B3521-210-000	2	41	B8203-210-0A0	32	6	GES-13008000	41	11
B2593-210-000	28	55	B3522-210-0A0	24	60	B8204-012-000	32	9	GSB-010010A0	28	39

From the library of: Superior Sewing Machine & Supply LLC

Part No. 品番	Page 頁	Ref. No.
GSB-01001000	28	45
GSB-010020A0	28	40
GSB-01002000	28	42
GSB-010030A0	28	49
GSB-010040A0	28	53
GSB-010050A0	28	47
GSB-020010A0	28	38
HA-0005900-00	26	34
HA-0007600-00	34	8
HA-0013500-0A	28	50
HA-0013500-00	26	35
HA-0013600-00	26	46
HA-0013700-00	33	14
HC-0108022-10	36	6
HC-0187010-20	36	7
HC-0188010-30	36	9
HC-0188033-20	36	8
HF-0014007-00	39	5
HF-0014007-00	39	11
HG-0032700-00	36	18
HG-0032900-00	34	6
HG-0033500-00	42	2
HK-0122900-00	26	64
HK-0253202-50	26	51
HK-0266500-20	38	34
HK-0266500-60	38	33
HL-0063900-00	36	30
HL-0084210-03	36	2
HL-0084210-04	36	3
HN-0006300-10	33	17
HR-0284050-30	33	13
HT-0024600-00	36	17
HT-0025700-00	36	29
HT-0033300-00	36	23
HX-0002100-00	33	25
HX-0005500-0A	26	39
HX-0005500-0A	28	46
HX-0006500-0A	26	66
HX-0011400-0B	33	24
HX-0011600-00	34	4
HX-0011600-00	36	4
HX-0012300-0A	26	18
HX-0012300-0B	26	17
HX-0015300-00	34	5
HX-0016100-00	42	3
HX-0019700-00	36	31
HX-0029800-00	33	20
MA0-11532000	40	22
MAT-80116S00	8	22
MAT-80116S00	16	41
MAT-80116S00	16	43
MC-2005010-00	6	20
MC-3720009-00	44	37
MC-3720011-00	44	62
MDP-170B1400	44	36
MDP-170B1800	44	61
MDP-500B1400	6	19
MTJ-MS00000S	32	2
MTJ-VM005000	39	20
MTJ-VM005200	39	21
MTS-P00800A0	39	17
MTS-P00950A0	39	16
M0011-520-0AA	41	2
M0011-520-0A0	41	1
M1001-513-000	33	6
M1002-512-000	33	10
M1002-520-000	41	21
M1003-512-000	36	14
M1003-520-000	41	5
M1004-512-000	36	15
M1008-520-000	41	29
M1009-520-000	41	7
M1010-510-000	33	26
M1010-520-000	41	26
M1011-512-000	33	22
M1011-520-000	41	24
M1012-512-000	38	29
M1012-520-000	41	3
M1013-520-000	41	17
M1021-512-000	36	26
M1076-510-000	34	13
M1077-510-000	34	14
M1078-510-000	34	15
M1080-510-000	34	16
M1081-510-000	34	9
M1082-510-000	34	20
M1083-510-000	34	7
M2001-520-00A	41	20
M2001-520-000	41	19
M2002-520-00A	41	14
M2002-520-00A	42	11
M2002-520-000	41	13
M2002-520-000	42	10
M3004-510-000	39	14
M3004-513-0A0	34	11
M3004-513-00A	34	10
M3006-510-000	39	9
M3010-110-B00	39	3
M4007-110-0AB	6	46
M8502-520-0A0	41	10
M8503-520-0B0	42	7
M8503-520-0C0	42	8
M8505-520-0A0	41	9
M8507-520-0A0	42	4
M8509-520-0A0	42	5
M8510-513-AA0	33	3
M8510-513-BA0	33	1
M8510-513-CA0	33	4
M8510-513-DA0	33	2
M8510-513-EA0	33	5
M8511-512-0A0	38	4
M8512-512-0A0	33	12
M8512-520-0A0	41	15
M8513-512-AA0	38	25
M8513-512-BA0	38	26
M8513-512-CA0	38	27
M8513-520-0A0	41	18
M8514-512-0A0	38	30
M8540-512-0A0	38	32
M8541-512-0A0	38	36
M8542-512-0A0	38	17
M8543-512-0A0	38	21
M8544-512-0A0	38	15
M8545-512-0A0	38	16
M8546-512-0A0	38	6
M8547-512-0A0	38	7
M8551-512-0A0	38	12
M8552-512-0A0	38	24
M8554-512-0A0	38	3
M8555-512-0A0	38	20
M8556-512-0A0	38	10
M8557-512-0A0	38	11
M8561-512-0A0	38	42
M8568-513-0A0	38	13
M8569-512-0A0	38	14
M8570-510-AA0	34	2
M8570-513-0A0	34	1
M8571-510-0A0	34	22
M8572-510-0A0	34	12
M8578-513-0A0	33	18
M8590-513-0A0	39	1
M8591-510-0A0	38	38
M8592-510-0A0	38	39
M8592-512-0A0	38	41
M8595-510-0A0	38	40
M8597-512-0A0	38	37
M8599-510-0AB	39	8
M8599-510-0A0	39	2
M8601-512-AB0	36	1
M8601-512-AB0	38	1
M8601-520-0A0	42	1
M8602-512-0A0	36	25
M8602-512-0A0	38	8
M8603-512-0A0	36	13
M8603-512-0A0	38	18
M8604-512-0A0	36	5
M8604-512-0A0	38	22
M8606-510-0A0	26	30
M8606-510-0A0	26	57
M8607-510-0A0	26	11
M8670-510-0A0	34	3
M9602-520-000	42	9
M9603-520-000	42	12
M9609-171-000	36	21
M9650-513-000	39	15
NM-6030000-0A	26	41
NM-6030001-SC	4	41
NM-6030001-SC	34	17
NM-6030001-SC	34	18
NM-6030001-SC	36	12
NM-6030001-SC	36	28
NM-6030001-SC	36	33
NM-6040001-SB	33	29
NM-6040003-SC	14	31
NM-6040003-SC	16	48
NM-6050000-SC	4	56
NM-6050001-SE	40	13
NM-6050001-SE	40	17
NM-6050001-SP	18	43
NM-6060003-SC	10	56
NM-6080721-SE	32	32
NM-6080721-SE	32	52
NM-6080721-SE	32	58
NM-6120003-SE	32	54
NM-6550815-SF	39	19
NM-7030510-SA	41	25
NM-7030510-SA	41	28
NS-6090310-SP	2	40
NS-6090310-SP	2	47
NS-6110310-SP	2	11
NS-6110310-SP	18	10
NS-6110310-SP	18	13
NS-6110420-SP	8	28
NS-6110420-SP	20	18
NS-6110430-SP	16	2
NS-6110530-SP	4	9
NS-6120310-SP	10	23
NS-6120310-SP	10	28
NS-6120310-SP	10	33
NS-6120310-SP	16	24
NS-6150310-SP	2	21
NS-6150310-SP	8	32
NS-6150430-SP	10	35
NS-6150430-SP	44	12
NS-6150540-SP	8	35
NS-6620310-SP	10	59
NS-6620310-SP	16	19
NS-6620310-SP	44	5
NS-6620310-SP	44	23
NS-6660430-SP	12	30
PA-1602503-A0	30	6
PA-1602504-A0	30	20
PJ-0460525-03	30	4
PS-0150065-KP	4	14
PS-0250182-KH	12	15
PS-0400182-K0	4	21
PS-0400182-K0	4	38
RC-0470611-KP	14	22
RE-0320000-K0	8	12
RE-0320000-K0	10	12
RE-0320000-K0	10	40
RE-0400000-K0	10	38
RE-0400000-K0	30	7
RE-0400000-K0	44	29
RE-0500000-K0	14	20
RE-0600000-KP	18	36
RE-0600000-K0	18	31
RE-0600000-K0	20	13
RE-0600000-K0	20	45
RE-0600000-K0	22	11
RE-0700000-K0	22	1
RE-0700000-K0	22	42
RE-0700000-K0	30	26
RO-0442401-00	4	54
RO-0981901-00	20	25
SB-1080005-00	18	32
SB-1080005-00	18	38
SB-1080005-00	20	33
SB-1080005-00	20	41
SB-7100002-00	20	27
SB-7100002-00	22	20
SB-7100002-00	30	19
SB-7120001-00	8	27
SD-0500803-TP	16	7
SD-0600101-TP	12	61
SD-0600281-TP	44	54
SD-0600321-SP	10	29
SD-0600361-SP	10	13
SD-0600411-TP	10	20
SD-0640191-TP	10	9
SD-0640211-SP	14	24
SD-0640321-SP	16	28
SD-0640323-TP	10	49
SD-0640391-TP	10	44
SD-0650305-TP	16	1
SD-0720332-SP	8	18
SD-0801021-TP	12	24
SD-1100301-TP	16	4
SD-1204315-SE	32	20
SK-3311600-SC	32	4
SK-3311600-SC	32	10
SK-3382001-SE	32	15

From the library of: Superior Sewing Machine & Supply LLC

Part No. 品番	Page 頁	Ref. No.	Part No. 品番	Page 頁	Ref. No.	Part No. 品番	Page 頁	Ref. No.	Part No. 品番	Page 頁	Ref. No.
SK-3452000-SC	32	53	SM-9082023-SE	32	28	SS-7080510-TP	6	17	SS-7151210-SP	44	16
SK-3552500-SC	32	63	SM-9082023-SE	32	35	SS-7080520-SP	26	3	SS-7151330-SP	8	23
SL-4030681-SC	42	6	SM-9082023-SE	32	51	SS-7090410-SP	12	56	SS-7740740-SP	4	51
SL-4030681-SF	32	8	SM-9082023-SE	33	7	SS-7090410-SP	44	51	SS-8090610-SP	14	3
SL-4030691-SC	28	44	SM-9086513-SC	32	55	SS-7090520-SP	24	4	SS-8090670-SP	26	8
SL-4030691-SC	33	21	SS-1060210-TP	12	44	SS-7090850-SP	26	54	SS-8110410-TP	6	32
SL-4030881-SC	34	21	SS-1060210-TP	44	39	SS-7090920-SP	10	19	SS-8110422-TP	6	49
SL-4030881-SC	36	11	SS-1090750-SP	44	33	SS-7091110-SP	10	7	SS-8110422-TP	20	21
SL-4030881-SC	36	19	SS-1110640-TP	12	62	SS-7091410-SP	10	46	SS-8110422-TP	22	21
SL-4030881-SF	41	12	SS-1110840-SP	2	50	SS-7110340-SP	28	20	SS-8110520-TP	4	6
SL-4030891-SC	38	2	SS-1110840-SP	2	51	SS-7110350-SP	28	51	SS-8110520-TP	12	32
SL-4030891-SC	38	5	SS-1110840-SP	2	52	SS-7110410-SP	4	29	SS-8110520-TP	12	35
SL-4030891-SC	38	9	SS-1110840-SP	18	20	SS-7110510-SP	8	5	SS-8110520-TP	12	42
SL-4030891-SC	38	23	SS-2090820-TP	16	37	SS-7110510-SP	12	18	SS-8111010-TP	6	48
SL-4031081-SC	36	20	SS-2110920-TP	16	10	SS-7110510-SP	24	19	SS-8111610-SP	6	36
SL-4031281-SC	36	27	SS-2110920-TP	16	57	SS-7110510-SP	24	33	SS-8120410-SP	30	23
SL-4031281-SC	36	32	SS-2111010-TP	8	9	SS-7110510-SP	26	2	SS-8150822-TP	12	36
SL-4031481-SC	36	22	SS-2621540-SP	8	25	SS-7110710-SP	2	59	SS-8151230-SP	30	15
SL-4040691-SC	32	59	SS-3090610-SP	2	43	SS-7110710-SP	4	27	SS-8151550-SP	6	43
SL-4040891-SC	28	41	SS-4090715-SP	2	33	SS-7110710-SP	10	16	SS-8660610-TP	6	22
SL-4040891-SC	41	16	SS-4110515-SP	2	24	SS-7110710-SP	10	21	SS-8660610-TP	8	34
SL-4041091-SC	33	11	SS-4110715-SP	2	45	SS-7110710-SP	14	39	SS-8660810-TP	6	28
SL-4041091-SC	33	23	SS-4110715-SP	24	48	SS-7110710-SP	16	25	SS-9090833-TP	6	30
SL-4041091-SC	33	27	SS-4110915-SP	22	25	SS-7110710-SP	16	29	SS-9110543-CP	24	46
SL-4041091-SC	38	19	SS-4110915-SP	30	28	SS-7110710-SP	24	8	SS-9111020-TP	4	15
SL-4041091-SC	38	31	SS-4111015-SP	2	2	SS-7110710-SP	24	23	SS-9111020-TP	18	9
SL-4041281-SC	38	35	SS-4111015-SP	2	20	SS-7110710-SP	24	26	SS-9111020-TP	18	14
SL-4051091-SC	38	28	SS-4111015-SP	4	22	SS-7110710-SP	24	37	SS-9111510-SP	20	19
SL-4860681-SC	26	65	SS-4150715-SP	2	29	SS-7110710-SP	24	49	SS-9121340-CP	30	2
SM-0030601-SA	41	27	SS-6060410-TP	12	13	SS-7110710-SP	24	53	SS-9150710-TP	20	24
SM-0030801-SA	41	4	SS-6080410-SP	22	13	SS-7110710-SP	26	20	SS-9150710-TP	28	31
SM-0030801-SA	41	6	SS-6080810-SP	44	26	SS-7110710-SP	26	48	SS-9151120-CP	22	33
SM-0030801-SA	41	22	SS-6081210-SP	44	25	SS-7110710-SP	26	49	SS-9151160-CP	10	58
SM-0041201-SA	41	8	SS-6090440-SP	24	41	SS-7110710-SP	44	1	SS-9661230-CP	6	37
SM-0041201-SA	41	30	SS-6090620-SP	18	2	SS-7110720-SP	2	53			
SM-1030801-SA	4	34	SS-6090620-SP	18	16	SS-7110740-TP	12	52	TA-0550604-RO	4	43
SM-1031201-SC	36	16	SS-6090630-SP	26	19	SS-7110740-TP	44	47	TA-0750704-RO	2	32
SM-1031201-SC	41	23	SS-6090630-TP	14	27	SS-7110840-SP	4	44	TA-0850604-RO	2	23
SM-1031401-SN	4	33	SS-6090670-TP	6	15	SS-7110840-SP	8	3	TA-1050504-RO	2	5
SM-1044050-SM	33	19	SS-6091510-SP	12	63	SS-7110840-SP	14	25	TA-1050504-RO	2	28
SM-1051001-SC	4	45	SS-6092120-SP	24	17	SS-7110840-SP	16	45	TA-1250406-RO	2	7
SM-4020501-SC	33	16	SS-6110430-TP	12	51	SS-7110840-SP	16	47	TA-2100904-RO	2	4
SM-4030855-SN	26	22	SS-6110430-TP	44	46	SS-7110840-SP	22	29	TA-2351305-RO	2	9
SM-4031601-SB	26	44	SS-6110610-TP	2	60	SS-7110840-SP	26	15			
SM-4040601-SC	4	23	SS-6110610-TP	18	19	SS-7110840-SP	26	31	WP-0250516-SD	44	35
SM-4051405-SE	40	12	SS-6110610-TP	22	7	SS-7110840-SP	26	62	WP-0320500-SC	34	19
SM-4060001-SF	4	35	SS-6110610-TP	22	39	SS-7110840-SP	30	30	WP-0320501-SC	4	39
SM-6031010-SC	26	14	SS-6111140-SP	12	27	SS-7110840-SP	44	6	WP-0320501-SC	26	13
SM-6031010-SC	26	26	SS-6111140-SP	24	54	SS-7110840-SP	44	65	WP-0320501-SC	26	27
SM-6031010-SC	26	58	SS-6111210-SP	6	41	SS-7110910-SP	20	16	WP-0320501-SC	26	43
SM-6040552-TP	18	23	SS-6120940-SP	30	11	SS-7110910-TP	10	25	WP-0320501-SC	26	59
SM-6040602-TP	18	29	SS-6121210-SP	18	25	SS-7110910-TP	10	31	WP-0330501-SB	26	4
SM-6040602-TP	20	7	SS-6121212-TP	12	7	SS-7110910-TP	16	38	WP-0330501-SB	26	21
SM-6040802-TR	20	40	SS-6121220-TP	16	14	SS-7110910-TP	18	12	WP-0371016-SD	14	28
SM-6040802-TR	20	52	SS-6121220-TP	16	54	SS-7110910-TP	20	36	WP-0371016-SD	24	3
SM-6041210-SC	44	14	SS-6121610-TP	8	14	SS-7110910-TP	22	5	WP-0430801-SC	4	24
SM-6041402-TP	18	4	SS-6122030-SP	20	54	SS-7110910-TP	22	37	WP-0430801-SC	32	7
SM-6051602-TP	18	30	SS-6122510-SP	6	51	SS-7111110-TP	12	22	WP-0450000-SD	2	61
SM-6051602-TP	18	41	SS-6151220-SP	12	20	SS-7111410-SP	44	4	WP-0450801-SD	6	42
SM-6054002-TN	18	42	SS-6151412-TP	6	38	SS-7111410-TP	10	18	WP-0450801-SD	26	16
SM-6054002-TN	20	14	SS-6151812-TP	10	52	SS-7111810-TP	20	37	WP-0450801-SD	25	32
SM-6056550-SP	4	49	SS-6151812-TP	14	15	SS-7121410-SP	20	44	WP-0450801-SD	26	63
SM-6061610-SC	40	6	SS-6151812-TP	22	17	SS-7121610-SP	20	8	WP-0450846-SP	12	53
SM-8040602-TP	18	34	SS-6151812-TP	30	16	SS-7121610-SP	20	56	WP-0450846-SP	44	48
SM-8040602-TP	20	30	SS-6621220-SP	14	36	SS-7150940-SP	10	45	WP-0451026-SH	10	41
SM-9061203-SE	32	42	SS-6681712-TP	6	21	SS-7151120-SP	6	9	WP-0480856-SP	22	28
SM-9082023-SE	32	25	SS-7060610-SP	44	34	SS-7151210-SP	20	11	WP-0480856-SP	30	31

From the library of: Superior Sewing Machine & Supply LLC

Part No. 品番	Page 頁	Ref. No.	Part No. 品番	Page 頁	Ref. No.	Part No. 品番	Page 頁	Ref. No.	Part No. 品番	Page 頁	Ref. No.
WP-0501016-SD	16	9									
WP-0501016-SD	20	9									
WP-0501016-SD	20	55									
WP-0520656-SA	4	53									
WP-0550800-SP	20	15									
WP-0551626-SD	4	55									
WP-0561616-SC	32	62									
WP-0612066-SP	22	18									
WP-0612066-SP	28	33									
WP-0612066-SP	30	17									
WP-0612516-SD	8	36									
WP-0621016-SD	20	23									
WP-0621016-SD	24	55									
WP-0650876-SD	10	55									
WP-0651001-SC	22	32									
WP-0651056-SD	8	31									
WP-0651056-SD	28	32									
WP-0651056-SH	4	5									
WP-0671016-SE	4	36									
WP-0671016-SE	32	44									
WP-0850002-SC	33	9									
WP-0871602-SE	32	23									
WP-0871602-SE	32	30									
WP-0871602-SE	32	37									
WP-0871602-SE	32	49									
WP-0871602-SE	32	56									
WP-0952916-SD	12	10									
WP-1252210-SC	32	22									
WP-1702600-SO	40	19									
WS-0310702-KS	26	42									
WS-0410002-KN	33	28									
WS-0451040-KP	44	13									
WS-0510002-KN	40	16									
WS-0621210-KR	32	43									
WS-0631510-KP	22	19									
WS-0631510-KP	30	18									
WS-0861410-KR	32	24									
WS-0861410-KR	32	29									
WS-0861410-KR	32	36									
WS-0861410-KR	32	50									
WS-0861410-KR	33	8									
WS-1002560-KR	39	18									
WS-1253010-KN	32	21									
WS-1643202-KR	40	21									
100-07003	2	13									
111-81500	40	14									
111-81559	40	1									
111-81609	40	10									
111-81708	40	15									
111-81757	40	9									
111-81807	40	5									
111-81906	40	2									
118-49502	32	11									
135-01309	2	26									
135-01408	2	31									
135-01705	2	27									
135-08205	12	33									
135-08551	12	23									
135-08700	12	28									
135-08809	12	25									
135-08908	12	26									
135-09807	14	19									
135-25001	16	39									
135-28807	24	47									
135-28906	24	44									
135-29607	24	39									

From the library of: Superior Sewing Machine & Supply LLC

From the library of: Superior Sewing Machine & Supply LLC

JUKI

JUKI CORPORATION JUKI株式会社

From the library of: Superior Sewing Machine & Supply LLC