JUKI®

Computer-controlled High-speed, Lockstitch Button Sewing Machine with Automatic Button Feeder

自動ボタン送り装置付き高速電子本縫ボタン付けミシン

LK-1903A/BR35

PARTS LIST

HOW TO MAKE USE OF THIS PARTS LIST

1. As to "#01" and "#02" refer to the "Note" given at the bottom of the respective pages.
2. Codes on the "Qty" column
   - Each numeral indicates the number of parts required.
   - "0.1" and "2.5" indicate the length (in meters) of the respective parts.
3. Parentheses mean that the corresponding part is a subpart that constructs an assembly part.
4. Dotted lines on the Figures indicate assembly parts.

パーツリストご利用に際して

1. リストページの#01、#02 等の印は、ページ下の"注記"の説明をご参照下さい。
2. 数量欄の数字は、個数を表し、0.1、2.5等の数値は、長さ（単位メートル）を表します。
3. 数量欄の（　）は、組部品を構成している子部品であることを意味します。
4. イラストページの－－－－－枠は、組構成であることを意味します。

40014248
No.1381-00

CONTENTS

目　　次

1. THREAD TENSION COMPONENTS 1
糸調子関係
2. WIPER MECHANISM COMPONENTS 1
ワイパー関係
3. EXCLUSIVE PARTS FOR LK-1903AS-311,LK-1903AS-312 (1) 3
LK-1903AS-311,LK-1903AS-312専用部品（1）
4. EXCLUSIVE PARTS FOR LK-1903AS-311,LK-1903AS-312 (2) 5
LK-1903AS-311,LK-1903AS-312専用部品（2）
5. BUTTON CLAMP COMPONENTS 7
ボタンつまみ関係
6. FINE POSITIN OF BUTTONS COMPONENTS (1) 9
ボタンすりもみ関係（1）
7. FINE POSITIN OF BUTTONS COMPONENTS (2) 11
ボタンすりもみ関係（2）
8. DRIVE CAM COMPONENTS 13
カム関係
9. INDEX COMPONENTS (1) 15
インデックス関係（1）
10. INDEX COMPONENTS (2) 17
インデックス関係（2）
11. FEEDER BALL COMPONENTS 19
フィダーボール関係
12. TABLE & COVER COMPONENTS 21
脚卓・カバー関係
13. BR CONTROL BOX COMPONENTS (FOR USE IN JAPAN AND GENERAL EXPORT) 23
BR電装関係（日本・一般輸出用）
14. BR CONTROL BOX CONPONENTS (FOR EUROPE) 25
BR電装関係（ヨーロッパ用）
15. BR POWER SUPPLY COMPONENTS 27
BR入出力関係
16. CONTROL BOX COMPONENTS 29
電装ボックス関係
17. OPERATION PANEL COMPONENTS 31
操作パネル関係

From the Library of Superior Sewing Machine & Supply LLC

19. BR35 WIRING DIAGRAM 35
BR35電装配線図
20. ACCESSORIE PART COMPONENTS 37
付属品関係
NUMERICAL INDEX OF PARTS 38
索引

Other parts list related to this modle:
この機種に関するパーツリストとして下記のパーツリストがあります。
LK-1900A SERIES (No.1368)
Computer-controlled High-speed Bar-tacking Industrial Sewing Machine
高速電子閂止めミシン

From the Library of Superior Sewing Machine & Supply LLC

1. THREAD TENSION COMPONENTS
糸調子関係

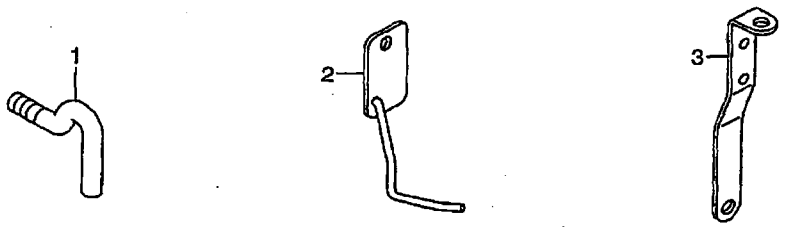

2. WIPER MECHANISM COMPONENTS
ワイパー関係

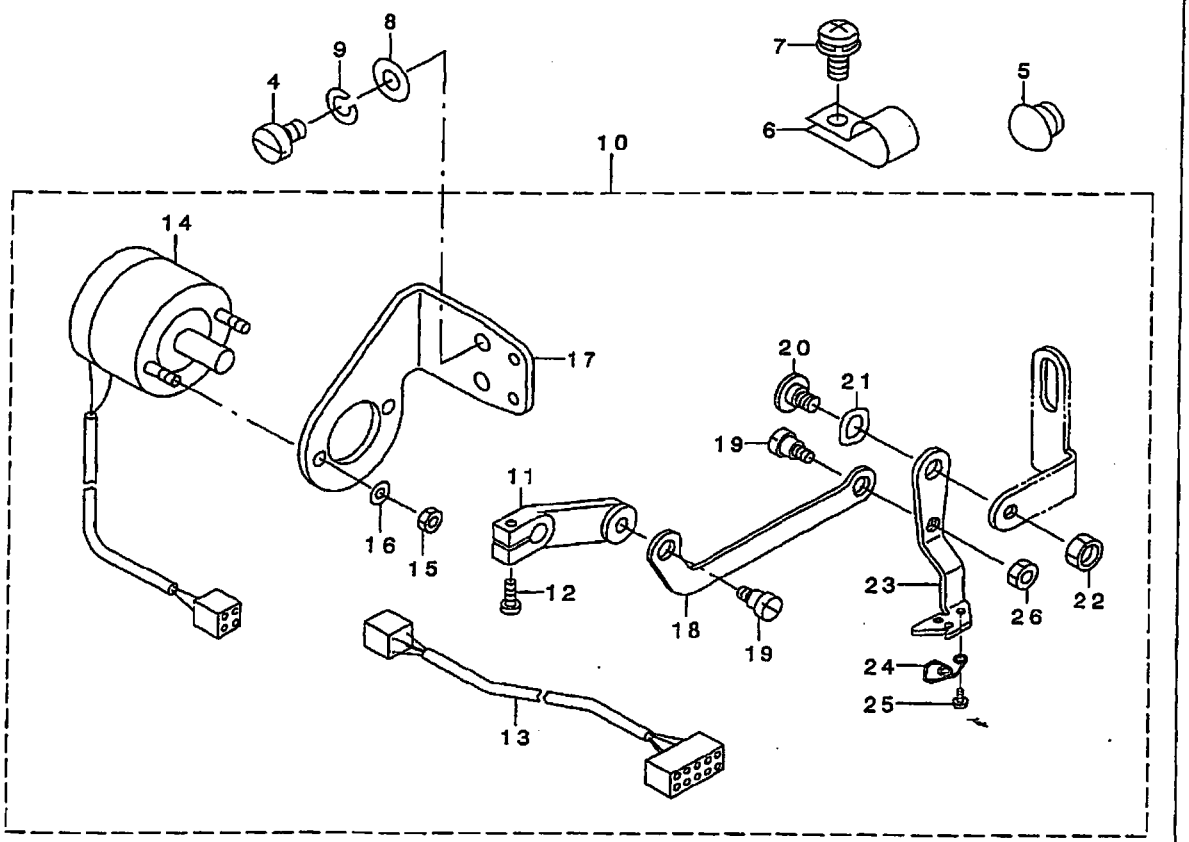

From the Library of Superior Sewing Machine & Supply LLC

REF. NO	NOTE	PART NO.	DESCRIPTION	ヒ ン メ イ	Qty
1		400-13452	L SHAPED THREAD GUIDE B	LｶﾞﾀｲﾄｱﾝﾅｲB	1
2		B5541-205-0A0	THREADING GUIDE ASM.	ｲﾄﾄｳｼｶﾞｲﾄﾞｸﾐ	1
3		B1114-581-000	THREAD GUIDE PLATE	ｲﾄｱﾝﾅｲ ｲﾀ	1
4		SM-6040650-TP	SCREW	ﾋﾗﾈｼﾞ M4 L=6	2
5		TA-1250705-R0	RUBBER PLUG	ﾄﾒｾﾝ	1
6		HX-0012300-0C	CABLE CLIP	ｹｰﾌﾞﾙｸﾘｯﾌﾟ	4
7		SL-4041091-SC	SCREW M4 L=10	ﾅﾍﾞｺﾈｼﾞ ｾｴｽ M4X0.7 L=10	4
8		WP-0450801-SD	WASHER 4.5X10X0.8	ﾋﾗｻﾞｶﾞﾈ 4.5X10X0.8	2
9		WS-0451040-KP	SPRING WASHER 4.5X8.5X1	ﾊﾞﾈｻﾞｶﾞﾈ 4.5X8.5X1	2
10		400-18334	MAGNET WIPER ASM.	ﾏｸﾞﾈｯﾄﾜｲﾊﾟｰｸﾐ	1
11		B2102-205-00A	WIPER ARM	ﾜｲﾊﾟｰｳﾃﾞ	(1)
12		SS-7111120-TP	SCREW	ﾏﾙﾋﾗﾈｼﾞ	(1)
13		400-18335	SOLENOID RELAY CABLE ASM.	ｿﾚﾉｲﾄﾞﾁｭｳｹｲｹｰﾌﾞﾙｸﾐ	(1)
14		141-47755	SOLENOID FOR WIPER ASM.	ﾜｲﾊﾟｰｿﾚﾉｲﾄﾞｸﾐ	(1)
15		NM-6040003-SC	NUT M4	ﾛｯｶｸﾅｯﾄ M4	(2)
16		WS-0410002-KS	SPRING WASHER M4	ﾊﾞﾈｻﾞｶﾞﾈ M4	(2)
17		138-64509	SOLENOID FITTING PLATE	ﾜｲﾊﾟｰｿﾚﾉｲﾄﾞﾄﾘｯｹﾊﾟｿﾞ	(1)
18		141-47607	WIPER LINK	ﾜｲﾊﾟｰﾘﾝｸ	(1)
19		SD-0600181-TP	HINGE SCREW	ﾀﾞﾝﾈｼﾞ	(2)
20		SD-0640261-SP	HINGE SCREW D=3.65 H=2.6	ﾀﾞﾝﾈｼﾞ D=6.35 H=2.6	(1)
21		WZ-0640200-KP	WAVE WASHER	ﾅﾐｶﾞﾀｻｶﾞﾈ	(1)
22		NS-6120310-SP	NUT 3/16-28	ﾛｯｶｸﾅｯﾄ 3/16-28	(1)
23		400-09859	WIPER	ﾜｲﾊﾟｰ	(1)
24		141-47805	SPRING	ﾜｲﾊﾟｰｲﾄｳｹﾊﾞﾈ	(1)
25		SS-7060310-SP	SCREW 3/32-56 L=3	ﾏﾙﾋﾗﾈｼﾞ 3/32-56 L=3	(2)
26		NS-6110310-SP	NUT 11/64-40	ﾛｯｶｸﾅｯﾄ 11/64-40	(1)

NOTE（注記） *ALL PARTS OTHER THAN ABOVE ARE SAME OF MODEL LK-1900A.
上記以外の部品は、LK-1900Aと共通です。

From the Library of Superior Sewing Machine & Supply LLC

3. EXCLUSIVE PARTS FOR LK-1903AS-311,LK-1903AS-312 (1)
LK-1903AS-311,LK-1903AS-312専用部品 (1)

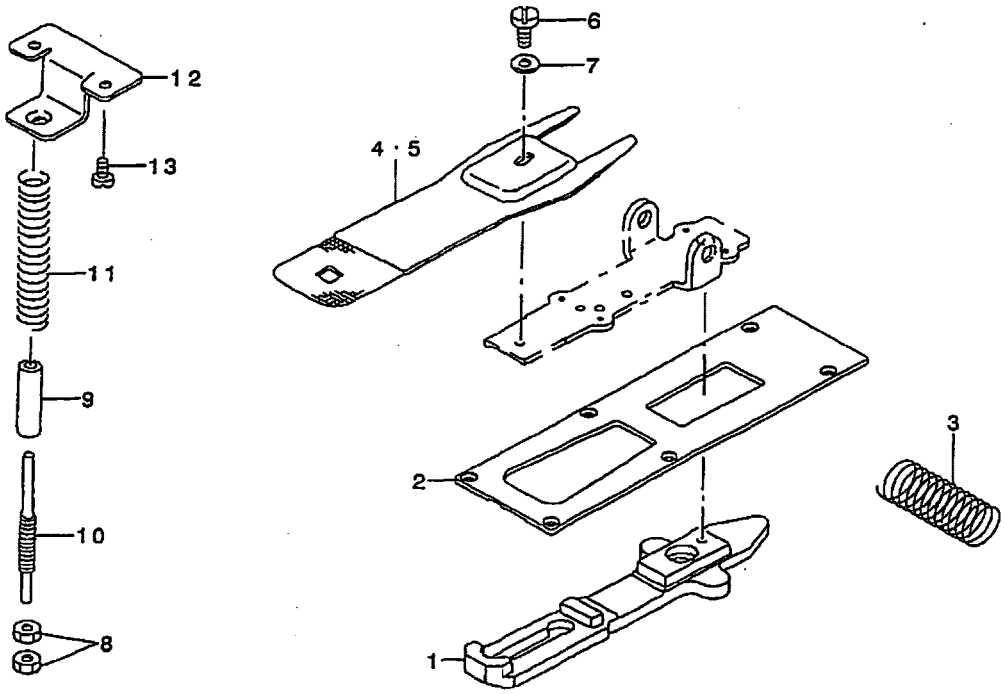

From the Library of Superior Sewing Machine & Supply LLC

REF. NO	NOTE	PART NO.	DESCRIPTION	とゾメイ	Qty
1		141-45106	CLOTH FEED PLATE	ヌノオクリイタ	1
2		400-06935	CROTH FEED PRESSER PLATE B	ヌノオクリオサエイタB	1
3		141-48407	VERTICAL FEED SHAFT SPRING	タテオクリジクバネ	1
4	#01	MAZ-15502000	PRESSURE PLATE	ヌノオサエシタイタ	1
5	#02	MAZ-15602000	PRESSURE PLATE	ヌノオサエシタイタ	1
6		SS-9110543-CP	SCREW 11/64-40 L=5.3	ロッカクボルト 11/64-40 L=5.3	1
7		WP-0501016-SD	WASHER 5X10.5X1	ヒラザガネ 5X10.5X1	1
8		B3125-012-000	THREAD TENSION NUT	イトチョーシナット	2
9		D2527-232-D00	SLEEVE	オサエバネササエバイブ	1
10		141-46906	ADJUSTING SHAFT	オサエバネチョウセツシク	1
11		138-12003	PRESSURE SPRING	オサエバネ	1
12		138-11906	ACCEPT PLATE, UPPER	オサエバネウケイタウエ	1
13		SM-5040855-SN	SCREW	バインドネジ	2

NOTE (注記)

#01....FOR LK-1903AS-311 — LK-1903AS-311用

#02....FOR LK-1903AS-312 — LK-1903AS-312用

*ALL PARTS OTHER THAN ABOVE ARE SAME OF MODEL LK-1900A.
上記以外の部品は、LK-1900Aと共通です。

From the Library of Superior Sewing Machine & Supply LLC

4. EXCLUSIVE PARTS FOR LK-1903AS-311,LK-1903AS-312 (2)
LK-1903AS-311,LK-1903AS-312専用部品 (2)

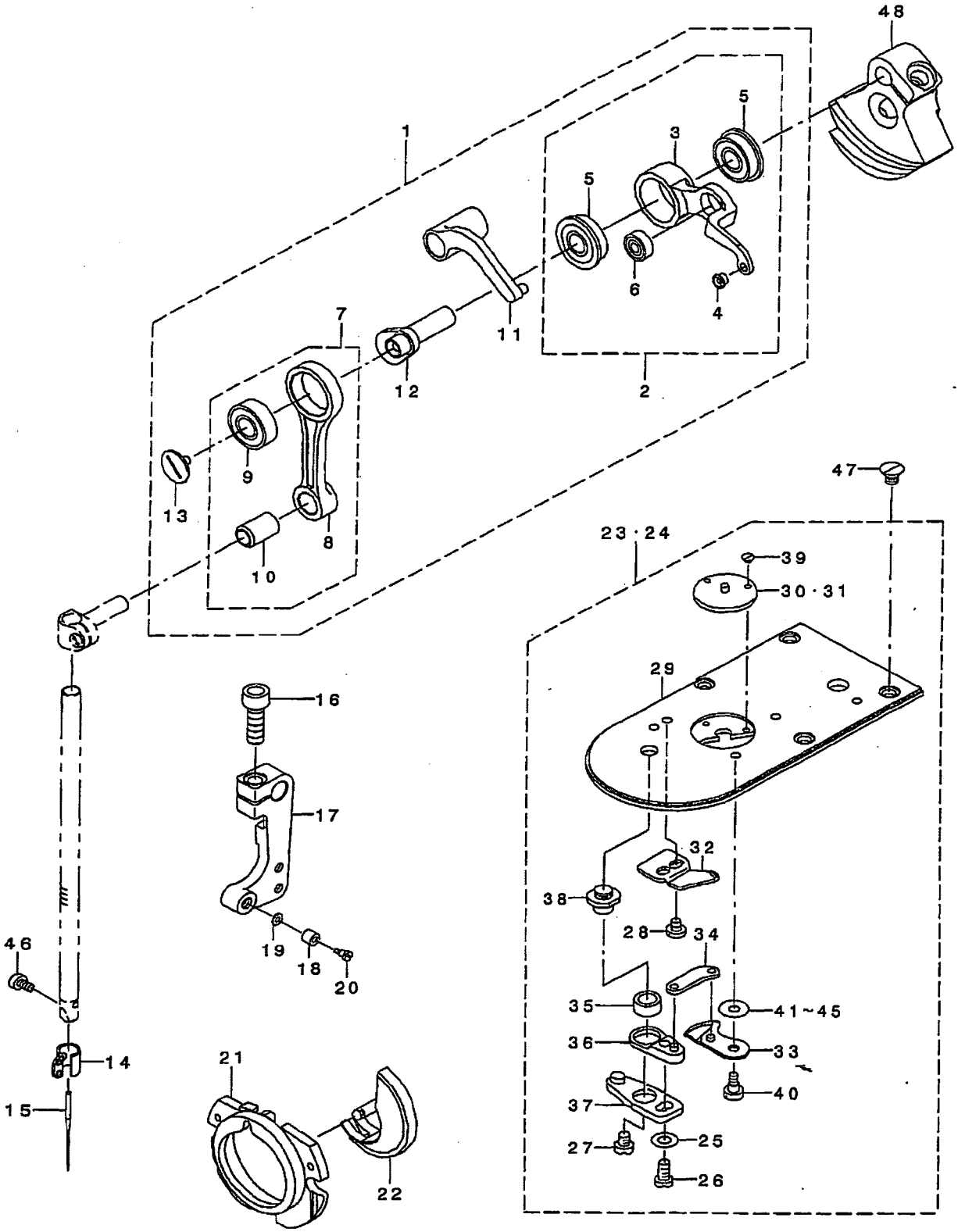

From the Library of Superior Sewing Machine & Supply LLC

REF. NO	NOTE	PART NO.	DESCRIPTION	ヒンメイ	Qty
1		400-06923	THREAD TAKE UP B COMPL.	ﾘﾝｸﾃﾝﾋﾞﾝBｹﾂｺﾞｳ	1
2		400-06924	THREAD TAKE UP LEVER B ASM.	ﾃﾝﾋﾞﾝBｸﾐ	(1)
3		400-06925	THREAD TAKE UP LEVER B	ﾃﾝﾋﾞﾝB	(1)
4		B1908-505-000	THREAD PASS BUSH	ﾃﾝﾋﾞﾝｲﾄﾐﾁ ﾌﾞｯｼｭ	(1)
5		SB-1080022-00	BEARING	ｺﾛｶﾞﾘｼﾞｸｳｹ	(2)
6		SB-1040016-00	BEARING	ｺﾛｶﾞﾘｼﾞｸｳｹ	(1)
7		400-06534	NEEDLE BAR CRANK ROD ASM.	ﾊﾘﾎﾞｳｸﾗﾝｸﾛｯﾄﾞｸﾐ	(1)
8		400-06535	NEEDLE BAR CRANK ROD	ﾊﾘﾎﾞｳｸﾗﾝｸﾛｯﾄﾞ	(1)
9		SB-1080023-00	BEARING	ｺﾛｶﾞﾘｼﾞｸｳｹ	(1)
10		228-91006	NEEDLE BAR CRANK ROD BUSH	ﾊﾘﾎﾞｳｸﾗﾝｸﾛｯﾄﾞﾌﾞｯｼｭ	(1)
11		400-06532	THREAD TAKE UP CRANK	ﾃﾝﾋﾞﾝｸﾗﾝｸ	(1)
12		400-06926	NEEDLE ROD CRANK B	ﾊﾘﾎﾞｳｸﾗﾝｸB	(1)
13		B1903-552-000	LEFT SCREW	ﾋﾀﾞﾘﾈｼﾞ	(1)
14		400-06525	NEEDLE BAR THREAD GUIDE	ﾊﾘﾎﾞｰｲﾄｱﾝﾅｲ	1
15		MDP-170B1400	NEEDLE DPX17 #14	ﾊﾘ DPX17 #14	1
16		SM-6061802-TP	SCREW M6 L=18	ﾛｯｶｸｱﾅﾎﾞﾙﾄ	1
17		400-11949	CONNECTING ARM B	ﾚﾝﾄﾞｳﾚﾝｹﾂｳﾃﾞB	1
18		B2619-372-000	STOP MOTION TRIPPING LEVER CAM	ﾊﾘｶｽﾞ ﾁｮｰｾﾂ ｺﾛ	1
19		B1853-512-00E	HOOK SHAFT WASHER	ｶﾏｼﾞｸﾁﾞｶﾞﾈ	1
20		SD-0791271-SP	HINGE SCREW D= 7.94 H=12.7	ﾀﾞﾝﾈｼﾞ D=7.94 H=12.7	1
21		141-03352	INNER HOOK PRESSER ASM., B	ﾅｶｶﾞﾏｵｻｴBｹﾂｺﾞｳ	1
22		400-06580	SHUTTLE	ﾅｶｶﾞﾏ	1
23	#01	400-06725	NEEDLE PLATE ASM.,M	ﾊﾘｲﾀｸﾐM	1
24	#02	400-06726	NEEDLE PLATE ASM.,K	ﾊﾘｲﾀｸﾐK	1
25		WP-0450846-SP	WASHER	ﾋﾗﾜﾞｶﾞﾈ	(1)
26		SS-7110740-TP	SCREW 11/64-40 L=7	ﾏﾙﾋﾗﾈｼﾞ 11/64-40 L=7	(1)
27		SS-6110430-TP	SCREW 11/64-40 L= 4.0	ﾋﾗﾈｼﾞ 11/64-40 L=4	(1)
28		SS-7090410-SP	SCREW 9/64-40 L= 3.5	ﾏﾙﾋﾗﾈｼﾞ 9/64-40 L=3.5	(2)
29		400-06721	NEEDLE PLATE	ﾊﾘｲﾀ	(1)
30	#01	MAZ-15801000	GUIDE	ﾊﾘｱﾅｶﾞｲﾄﾞ	(1)
31	#02	MAZ-15601000	GUIDE	ﾊﾘｱﾅｶﾞｲﾄﾞ	(1)
32		B2424-280-000	FIXING KNIFE	ｺﾃｲﾒｽ	(1)
33		B2421-280-0A0	MOVING KNIFE ASM.	ﾄﾞｰﾒｽ ｸﾐ	(1)
34		B2418-280-000	MOVING KNIFE LINK	ﾄﾞｳﾒｽ ﾘﾝｸ	(1)
35		B2416-280-000	THREAD CUTTING LEVER RING	ｲﾄｷﾘ ﾚﾊﾞｰﾘﾝｸﾞ	(1)
36		B2415-280-0A0	THREAD CUTTER LEVER ASM., SMAL	ｲﾄｷﾘ ﾚﾊﾞｰ (ｼｮｳ) ｸﾐ	(1)
37		B2414-280-0A0	THREAD CUTTER LEVER ASM., LARG	ｲﾄｷﾘ ﾚﾊﾞｰ (ﾀﾞｲ) ｸﾐ	(1)
38		B2417-280-000	THREAD CUTTER LEVER SHAFT	ｲﾄｷﾘ ﾚﾊﾞｰｼﾞｸ	(1)
39		SS-1060210-TP	SCREW 3/32-56 L=2.2	ｻﾗﾈｼﾞ 3/32-56 L=2.2	(2)
40		SD-0500091-TP	HINGE SCREW D= 5.0 H= 0.9	ﾀﾞﾝﾈｼﾞ D=5 H=0.9	(1)
41	#03	B2423-280-00C	MOVING KNIFE WASHER C	ﾄﾞｰﾒｽ ｽﾞｶﾞﾈ C	(1)
42	#03	B2423-280-00D	MOVING KNIFE WASHER D	ﾄﾞｰﾒｽ ｽﾞｶﾞﾈ D	(1)
43	#03	B2423-280-00E	MOVING KNIFE WASHER E	ﾄﾞｳﾒｽｽﾞｶﾞﾈ	(1)
44	#03	B2423-280-00A	MOVING KNIFE WASHER A	ﾄﾞｰﾒｽ ｽﾞｶﾞﾈ A	(1)
45	#03	B2423-280-00B	MOVING KNIFE WASHER B	ﾄﾞｰﾒｽ ｽﾞｶﾞﾈ B	(1)
46		SM-6030500-SN	SCREW M3 L=5	ﾋﾗﾈｼﾞ M3 L=5	1
47		SM-1040650-TP	SCREW	ｻﾗﾈｼﾞ M4 L=6	4
48		400-06927	COUNTER_WEIGHT_B	ﾂﾘｱｲｽｲB	1

NOTE (注記)	#01....FOR LK-1903AS-311	LK-1903AS-311用
	#02....FOR LK-1903AS-312	LK-1903AS-312用
	#03....SELECTIVE PARTS	選択部品

*ALL PARTS OTHER THAN ABOVE ARE SAME OF MODEL LK-1900A.
上記以外の部品は、LK-1900Aと共通です。

From the Library of Superior Sewing Machine & Supply LLC

5. BUTTON CLAMP COMPONENTS
ボタンつまみ関係

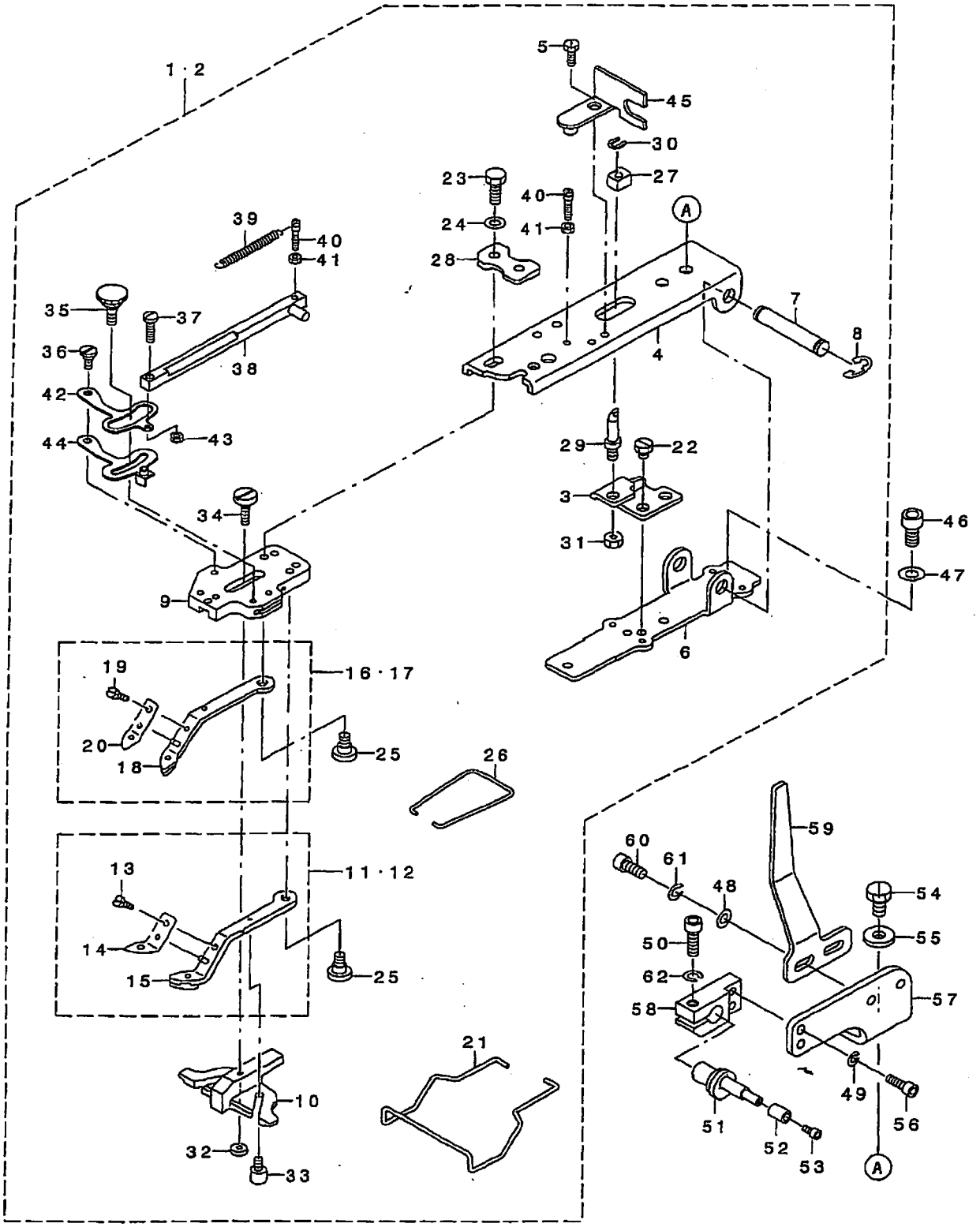

From the Library of Superior Sewing Machine & Supply LLC

REF. NO	NOTE	PART NO.	DESCRIPTION	ヒンメイ	Qty
1	#01	141-90052	KNOB DEVICE JUNCTION COMPL.	ｼﾖｳﾎﾞﾀﾝﾖｳﾂﾏﾐｿｳﾁ ｹﾂｺﾞｳ	1
2	#02	141-90151	KNOB DEVICE JUNCTION COMPL.	ﾁｭｳﾎﾞﾀﾝﾖｳﾂﾏﾐｿｳﾁ ｹﾂｺﾞｳ	1
3		MAZ-15514000	SUPPORT PLATE	ｼﾁｭｳﾄﾘﾂｹｲﾀ	(1)
4		141-46203	PICK-UP FOOT INSTALLING BASE	ﾂﾏﾐｱｼﾄﾘﾂｹﾀﾞｲ	(1)
5		SS-9091010-SP	SCREW 9/64-40 L=10	ﾛｯｶｸﾎﾞﾙﾄ 9/64-40 L=10	(1)
6		141-46104	PICK-UP INSTALLING BASE	ﾂﾏﾐｿｳﾁﾄﾘﾂｹﾀﾞｲ	(1)
7		141-41402	INSTALLING SHAFT	ﾂﾏﾐｿｳﾁﾄﾘﾂｹﾀﾞｸ	(1)
8		RE-0700000-K0	E-RING 7	Eｶﾞﾀﾄﾒﾂ 7	(2)
9		141-46302	PICK-UP FOOT INSTALLING BASE	ﾎﾞﾀﾝﾂﾏﾐｱｼﾄﾘﾂｹﾀﾞｲ	(1)
10		MAZ-16522000	BUTTON GUIDE FOOT	ﾎﾞﾀﾝｶﾞｲﾄﾞｱｼ	(1)
11	#01	141-90458	S BUTTON CLAMP JAW LEVER ASM.R	ｼﾖｳﾎﾞﾀﾝﾖｳﾂﾏﾐｱｼ ﾐｷﾞｹﾂｺﾞｳ	(1)
12	#02	MAZ-166070B0	M BUTTON CLAMP JAW LEVER ASM.R	ﾁｭｳﾎﾞﾀﾝﾖｳﾂﾏﾐｱｼﾐｷﾞ ｹﾂｺﾞｳ	(1)
13		SS-7090410-SP	SCREW 9/64-40 L= 3.5	ﾏﾙﾋﾗﾈｼﾞ 9/64-40 L=3.5	(2)
14		MAZ-08829000	SPRING, RIGHT	ﾎﾞﾀﾝﾂﾏﾐｲﾀ ﾊﾞﾈ(ﾐｷﾞ)	(1)
15		MAZ-166070A0	M BUTTON CLAMP JAW LEVER ASM.R	ﾁｭｳﾎﾞﾀﾝﾖｳ ﾂﾏﾐｱｼ ﾐｷﾞ ｸﾐ	(1)
16	#01	141-90557	S BUTTON CLAMP JAW LEVER ASM.L	ｼﾖｳﾎﾞﾀﾝﾖｳﾂﾏﾐｱｼ ﾋﾀﾞﾘｹﾂｺｳ	(1)
17	#02	MAZ-166080B0	KNOB FOOT JUNCTION (LEFT)	ﾁｭｳﾎﾞﾀﾝﾖｳﾂﾏﾐｱｼﾋﾀﾞﾘｹﾂｺﾞｳ	(1)
18		MAZ-166080A0	MIDDLE BUTTON CLAMP LEVER ,L	ﾁｭｳﾎﾞﾀﾝﾖｳﾂﾏﾐｱｼﾋﾀﾞﾘｹﾂｺﾞｳ	(1)
19		SS-7090410-SP	SCREW 9/64-40 L= 3.5	ﾏﾙﾋﾗﾈｼﾞ 9/64-40 L=3.5	(2)
20		MAZ-08828000	SPRING, LEFT	ﾎﾞﾀﾝﾂﾏﾐｲﾀ ﾊﾞﾈ(ﾋﾀﾞﾘ)	(1)
21		D3130-M1Y-C00	FINGER GUARD	ｭﾋﾞｶﾞｰﾄﾞ	(1)
22		SS-9110460-CP	SCREW 11/64-40 L=4	ﾛｯｶｸﾎﾞﾙﾄ 11/64-40 L=4	(2)
23		SS-9621413-SP	SCREW 3/16-32 L=13.5	ﾛｯｶｸﾎﾞﾙﾄ 3/16-32 L=13.5	(2)
24		WP-0501016-SD	WASHER 5X10.5X1	ﾋﾗﾜﾞｶﾞﾈ 5X10.5X1	(2)
25		SD-0640391-TP	HINGE SCREW D= 6.35 H= 3.9	ﾀﾞﾝﾈｼﾞ D=6.35 H=3.9	(2)
26		B2561-372-000	BUTTON CLAMP SPRING	ﾎﾞﾀﾝ ﾂﾏﾐｱｼ ﾊﾞﾈ	(1)
27		MAZ-15515000	SLIDE BLOCK	ﾖｺﾌﾚﾎﾞｳｼﾀ ｶｸｺﾏ	(1)
28		141-90300	FITTING BASE PRESSER PLATE	ﾂﾏﾐｱｼﾄﾘﾂｹﾀﾞｲｵｻｴｲﾀ	(1)
29		135-40901	STATIONING BLOCK SHAFT	ﾖｺﾌﾚﾊﾎﾞｰﾀﾞｼﾁｭｳ	(1)
30		D2548-232-D00	SNAP RING,FOR CONNECTING ROD	ﾖｺﾌﾚ ﾎﾞｰﾀﾞﾊｳﾗ ﾄﾒﾂ	(1)
31		NS-6150310-SP	NUT 15/64-28	ﾛｯｶｸﾅｯﾄ 15/64-28	(1)
32		B2553-372-000	NUT	ﾎﾞﾀﾝ ｶﾞｲﾄﾞｱｼ ﾄﾒﾈｼﾞ B	(1)
33		B2560-372-000	BUTTON CLAMP STOP PIN	ﾂﾏﾐｱｼ ﾋﾗｷﾋﾟﾝ	(2)
34		SD-0550303-TP	HINGE SCREW D=5.5 H=3	ﾀﾞﾝﾈｼﾞ D=5.5 H=3	(1)
35		B2549-372-R00	CLAMP SCREW A	ﾋﾗｷﾚﾊﾟｰﾄﾒﾈｼﾞ A	(1)
36		SD-0500301-SP	HINGE SCREW D= 5 H= 3	ﾀﾞﾝﾈｼﾞ D=5 H=3	(1)
37		SS-7091480-SP	SCREW 9/64-40 L=13.5	ﾏﾙﾋﾗﾈｼﾞ 9/64-40 L=13.5	(1)
38		MAZ-088270A0	CLAMP PELEASE LINK ASM.	ｸﾗﾝﾌﾟｶｲﾀﾞﾖﾘﾝｸ(ｸﾐ)	(1)
39		GBR-01606000	RELEASE RETURN SPRING	ｶｲﾀﾞﾖ ﾓﾄﾞﾗﾊﾞﾈ	(1)
40		GBR-01607000	SPRING HOOK	ｽﾌﾟﾘﾝｸﾞ ﾌﾂｸ	(2)
41		NS-6080210-SP	NUT 1/8-44	ﾛｯｶｸﾅｯﾄ 1/8-44	(2)
42		GBR-01601000-A	CLAMP RELEASE LEVER	ｸﾗﾝﾌﾟｶｲﾀﾞﾖﾚﾊﾞｰ	(1)
43		NS-6090310-SP	NUT 9/64-40	ﾛｯｶｸﾅｯﾄ 9/64-40	(1)
44		B2548-372-RA0	BUTTON CLAMP STOP LEVER ASM.	ﾂﾏﾐｱｼ ﾋﾗｷﾚﾊﾞｰ ｸﾐ	(1)
45		D2572-M1Y-C0F	LINK SUPPORTING PLATE	ﾘﾝｸｻﾎｴｲﾀ	(1)
46		SM-6061202-TP	SCREW M6 L=12	ﾛｯｶｸｱﾅﾎﾞﾙﾄ M6 L=12	1
47		WP-0612516-SD	WASHER 6.1X15.2X2.5	ﾋﾗﾜﾞｶﾞﾈ 6.1X15.2X2.5	1
48		WP-0531000-SD	WASHER M5	ﾋﾗﾜﾞｶﾞﾈ ｺｶﾞﾀﾏﾙ M5	2
49		WS-0410002-KN	SPRING WASHER	ﾊﾞﾈﾜﾞｶﾞﾈ M4	2
50		SM-6051602-TP	SCREW M5X0.8 L=16	ﾛｯｶｸｱﾅﾎﾞﾙﾄ M5X0.8 L=16	1
51		182-27603	HOOK	ﾇﾉｵｻｴｱｹﾞﾌｯｸ	1
52		182-00709	BUTTON GAUGE FOR FOUR HOLES	ﾛｰﾗｰ	1
53		SM-6030602-TP	SCREW M3X0.5 L=6	ﾛｯｶｸｱﾅﾎﾞﾙﾄ M3X0.5 L=6	1
54		SS-9151120-CP	SCREW 15/64-28 L=11	ﾛｯｶｸﾎﾞﾙﾄ 15/64-28 L=11	2
55		WP-0612516-SD	WASHER 6.1X15.2X2.5	ﾋﾗﾜﾞｶﾞﾈ 6.1X15.2X2.5	2
56		SM-6041202-TP	SCREW M4X0.7 L=12	ﾛｯｶｸｱﾅﾎﾞﾙﾄ	2
57		GBR-25004000	HOLDER BRACKET	ﾎﾙﾀﾞﾌﾞﾗｹｯﾄ	1
58		182-09007	HOOK HOLDER	ﾌｯｸﾎﾙﾀﾞ	1
59		GBR-25003000	LIFTING ACTUATING PLATE	ｵｻｴｱｹﾞｻﾄﾞｳｲﾀ	1
60		SM-6051202-TP	SCREW M5X0.8 L=12	ﾛｯｶｸｱﾅﾎﾞﾙﾄ M5X0.8 L=12	2
61		WS-0510002-KP	SPRING WASHER 5.1X9.2X1.3	ﾊｯｷﾞﾜﾞｶﾞﾈ 5.1X9.2X1.3	2
62		WS-0510002-KP	SPRING WASHER 5.1X9.2X1.3	ﾊｯｷﾞﾜﾞｶﾞﾈ 5.1X9.2X1.3	1

NOTE (注記)

#01....FOR LK-1903-311 — LK-1903-311用

#02....FOR LK-1903-312 — LK-1903-312用

From the Library of Superior Sewing Machine & Supply LLC

6. FINE POSITIN OF BUTTONS COMPONENTS (1)
ボタンすりもみ関係（1）

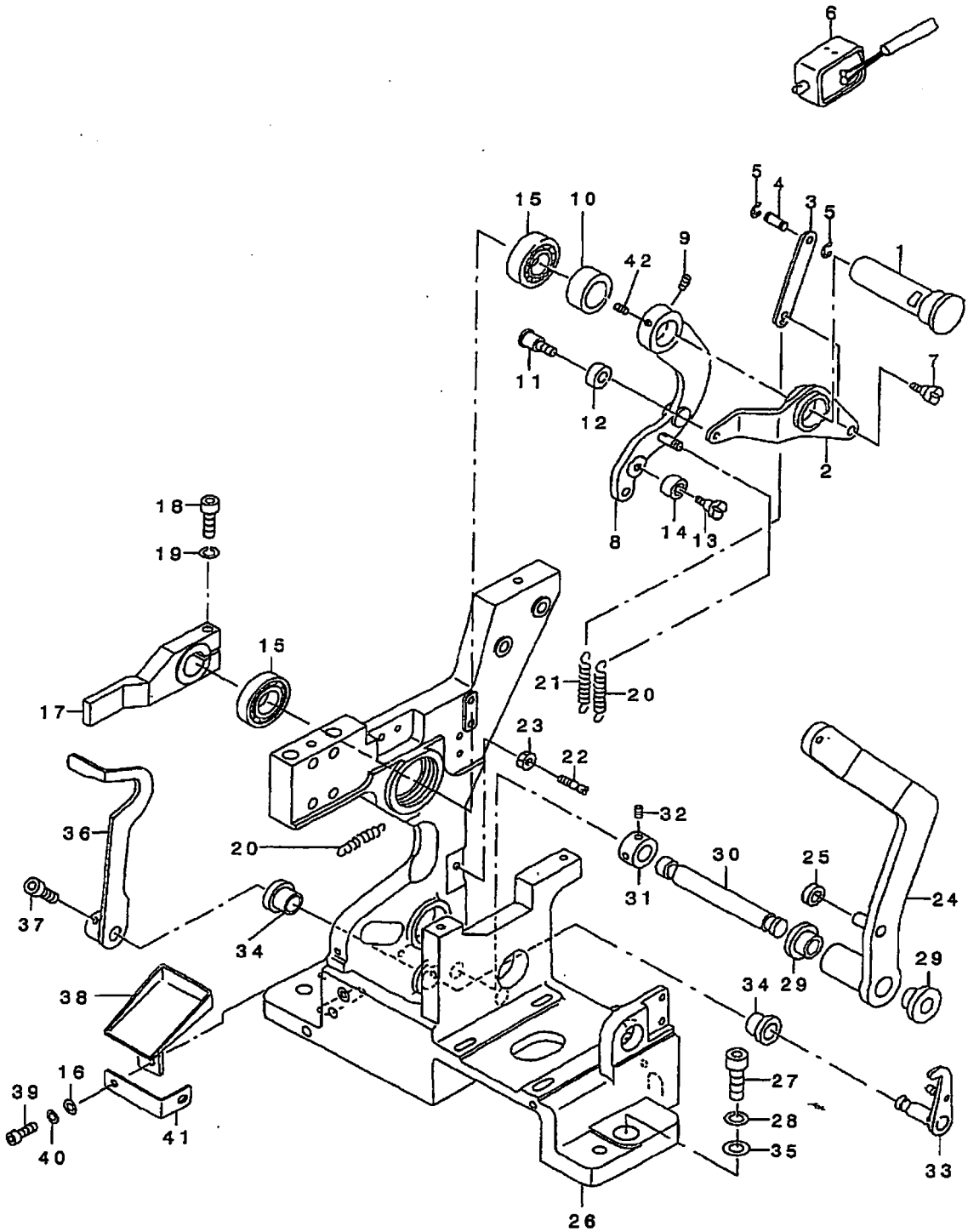

From the Library of Superior Sewing Machine & Supply LLC

REF. NO	NOTE	PART NO.	DESCRIPTION	ヒンメイ	Qty
1		165-52507	ARM SHAFT	ｱｰﾑｼﾞｸ	1
2		182-19709	RUBBING UP-AND-DOWN LEVER	ｽﾘﾓﾐｼｮｳｺｳﾚﾊﾞｰ	1
3		182-18206	RUBBING UP-AND-DOWN LINK	ｽﾘﾓﾐｼｮｳｺｳﾘﾝｸ	1
4		165-57209	PIN	ﾄﾒﾜﾖｳﾋﾟﾝEﾘﾝｸﾞﾂｹ	1
5		RE-0200000-K0	E-RING	Eｶﾞﾀﾄﾒﾜ 2	2
6		GBR-10852000	MAGNET	ｽﾘﾓﾐｶｺｳﾏｸﾞﾈｯﾄ	1
7		SD-0600341-TP	HINGE SCREW D=6.0 H=3.4	ﾀﾞﾝﾈｼﾞ	1
8		182-27850	UP AND DOWN LEVER ASM.	ｼﾞﾖｳｹﾞﾚﾊﾞｰｸﾐ	1
9		SM-8050602-TP	SCREW M5 L=6	ﾄﾒﾈｼﾞ M5X0.8 L=6	2
10		165-52606	THRUST COLLAR	ｱｰﾑｼﾞｸｶﾗｰ	1
11		SD-0600401-TP	HINGE SCREW D= 6 H= 4	ﾀﾞﾝﾈｼﾞ D=6 H=4	1
12		182-19808	RUBBING ROLLER	ｽﾘﾓﾐﾛｰﾗ	1
13		SD-0601021-SP	HINGE SCREW D=6 H=10.2	ﾀﾞﾝﾈｼﾞ D=6 H=10.2	1
14		165-56706	BEARING	ﾆｰﾄﾞﾙﾍﾞｱﾘﾝｸﾞ	1
15		SB-1150004-00	RADIAL BEARING	ﾗｼﾞｱﾙｼﾞｸｳｹ	2
16		WP-0430800-SC	WASHER M4	ﾋﾗｼﾞｶﾞﾈ ｺｶﾞﾀﾏﾙ M4	1
17		182-07902	UP AND DOWN ARM	ﾇﾉｵｻｴｼﾞｮｳｹﾞｱｰﾑ	1
18		SM-6052502-TP	SCREW M5X0.8 L=25	ﾛｯｶｸｱﾅﾎﾞﾙﾄ	1
19		WS-0510002-KN	SPRING WASHER	ﾊﾞﾈｼﾞｶﾞﾈ 5.1X9.2X1.3	1
20		165-54008	SPRING	ﾋｯﾊﾟﾘﾊﾞﾈ	2
21		165-53208	SPRING	ｽﾘﾓﾐｼﾞｮｳｼｮｳﾊﾞﾈ	1
22		165-53307	HOOK	ｽﾘﾓﾐﾌｯｸ	1
23		NM-6050001-SC	NUT M5	ﾛｯｶｸﾅｯﾄ M5X0.8 1ｼｭ	1
24		182-06706	TURNING LEVER	ｾﾝｶｲﾚﾊﾞｰ A	1
25		165-56805	COLLAR	ｳﾁﾜ	1
26		182-27702	MAIN BODY	ﾎﾝﾀｲﾌﾚｰﾑ	1
27		SM-6063002-TP	SCREW M6 L=30	ﾊﾝｿｳﾀｲ ｼﾞｸｳｹ ﾄﾒﾈｼﾞ	3
28		WS-0610002-KN	SPRING WASHER 6.1X12.2X1.5	ﾊﾞﾈｻﾞｶﾞﾈ M6	3
29		165-57506	LEVER SHAFT METAL	ｾﾝｶｲﾚﾊﾞｰｼﾞｸﾒﾀﾙ	2
30		165-54503	SHAFT	ｼｬﾌﾄ	1
31		165-59304	COLLAR	ｾﾝｶｲｱｰﾑｶﾗｰ	1
32		SM-8040602-TP	SCREW M4X0.7 L=6	ﾄﾒﾈｼﾞ	2
33		182-17752	CLAMP RELEASE ASM.	ｸﾗﾝﾌﾟｶｲｼﾞﾖｸﾐ	1
34		165-57605	SHAFT BUSHING	ｸﾗﾝﾌﾟｶｽﾞｼﾞｮｼﾞｸﾒﾀﾙ	2
35		165-59601	WASHER	ｻﾞｶﾞﾈ	3
36		182-06904	CLAMP RELEASE ARM	ｸﾗﾝﾌﾟｶｲｼﾞｮｱｰﾑ	1
37		SM-6050802-TP	SCREW M5X0.8 L=8	ﾛｯｶｸｱﾅﾎﾞﾙﾄ M5X0.7 L=8	2
38		165-50105	SUPPORT PLATE	ﾊｲｼｭｳｳｹｻﾞﾗ	1
39		SM-6040802-TP	SCREW M4X0.7 L=8	ﾛｯｶｸｱﾅﾎﾞﾙﾄ	1
40		WS-0410002-KN	SPRING WASHER	ﾊﾞﾈｻﾞｶﾞﾈ M4	1
41		GBR-25005000	CAM FIXING PLATE	ﾇﾉｵｻｴｷｹﾞｶﾑｺﾃｲｲﾀ	1
42		SM-8050612-TP	SCREW M5X6	ﾄﾒﾈｼﾞ M5X0.8 L=6	1

From the Library of Superior Sewing Machine & Supply LLC

7. FINE POSITIN OF BUTTONS COMPONENTS (2)

ボタンすりもみ関係（2）

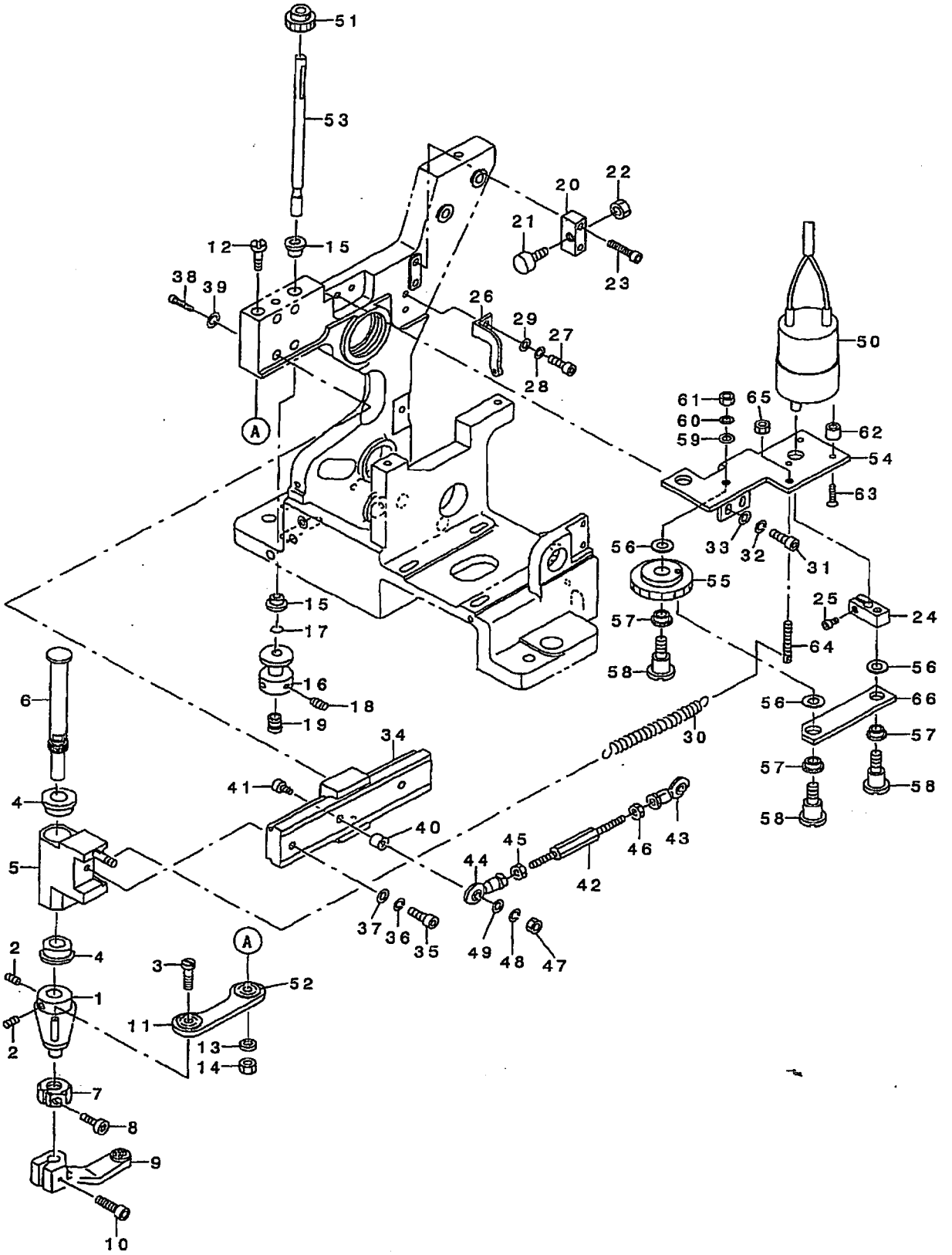

From the Library of Superior Sewing Machine & Supply LLC

REF. NO	NOTE	PART NO.	DESCRIPTION	ヒ ン メ イ	Qty
1		182-06003	TURNING LEVER BOSS	ｾﾝｶｲﾚﾊﾞｰ	1
2		SM-8050602-TP	SCREW M5 L=6	ﾄﾒﾈｼﾞ M5X0.8 L=6	2
3		165-50808	SCREW	ｷｭｳﾒﾝｼﾞｸﾄﾘﾂｹﾈｼﾞ	1
4		165-57407	ARM SHAFT METAL	ｾﾝｶｲｱｰﾑｼﾞｸﾒﾀﾙ	2
5		182-27959	TURNING HEAD ASM.	ｾﾝｶｲﾍﾂﾄﾞｸﾐ	1
6		182-05906	TURNING SHAFT	ｾﾝｶｲｼﾞｸ	1
7		182-06409	STOPPER	ﾁｮｳｾｲｽﾄｯﾊﾟ	1
8		SM-6031202-TP	SCREW M3X0.5 L=12	ﾛﾂｶｸｱﾅﾎﾞﾙﾄ	1
9		165-57902	BUTTON CARRIER A	ﾎﾞﾀﾝｷｬﾘｱA	1
10		SM-6051402-TP	SCREW M5X0.8 L=14	ﾛﾂｶｸｱﾅﾎﾞﾙﾄ	1
11		182-06607	CONNECTING PLATE	ﾚﾝｹﾂｲﾀ	1
12		182-05708	SCREW	ｷｭｳﾒﾝｼﾞｸｳｹﾎﾞﾙﾄ	1
13		WS-0510002-KS	SPRING WASHER M5	ﾊﾞﾈｼﾞｶﾞﾈ M5	1
14		NM-6050001-SC	NUT M5	ﾛﾂｶｸﾅﾂﾄ M5X0.8 ﾅｼｺ	1
15		165-57308	METAL	ｶﾞﾝｺﾒﾀﾙ	2
16		165-51905	HOOK	ｼﾞﾖｳｹﾞﾌｯｸ	1
17		165-58801	O-RING	ｶｲﾃﾝﾛｯﾄﾞOﾘﾝｸﾞ	1
18		SM-8040602-TP	SCREW M4X0.7 L=6	ﾄﾒﾈｼﾞ	2
19		182-00501	WORK ATTACHMENT (SMALL)	ﾜｰｸｱﾀｯﾁﾒﾝﾄ(ｼｮｳ)	1
20		182-18800	STOPPER HOLDER	ｽﾄｯﾊﾟﾎﾙﾀﾞ	1
21		165-52309	STOPPER	LMｶﾞｲﾄﾞｽﾄｯﾊﾟｰ	1
22		NM-6040001-SC	NUT M4	ﾛﾂｶｸﾅﾂﾄ M4	1
23		SM-6042002-TP	SCREW M4X0.7 L=20	ﾛﾂｶｸｱﾅﾎﾞﾙﾄ	2
24		GBR-11112000	DRIVING ARM	ﾛｯﾄﾞｸﾄﾞｳｳﾃﾞ	1
25		SS-6111052-TP	SCREW	ﾛﾂｶｸｱﾅﾎﾞﾙﾄ	1
26		182-05401	SPRING HOOK	ｽﾀｰﾄｶﾑﾓﾄﾞｼﾊﾞﾈﾌｯｸ	1
27		SM-6041202-TP	SCREW M4X0.7 L=12	ﾛﾂｶｸｱﾅﾎﾞﾙﾄ	2
28		WS-0410002-KN	SPRING WASHER	ﾊﾞﾈｼﾞｶﾞﾈ M4	2
29		WP-0430800-SC	WASHER M4	ﾋﾗﾜﾞｶﾞﾈ ｺｶﾞﾀﾏﾙ M4	2
30		165-51806	SPRING	ｾﾝｶｲｱｰﾑﾓﾄﾞｼﾊﾞﾈ	1
31		SM-6041002-TP	SCREW M4 L=10	ﾛﾂｶｸｱﾅﾎﾞﾙﾄ M4X0.7 L=10	2
32		WS-0410002-KN	SPRING WASHER	ﾊﾞﾈｼﾞｶﾞﾈ M4	2
33		WP-0430800-SC	WASHER M4	ﾋﾗﾜﾞｶﾞﾈ ｺｶﾞﾀﾏﾙ M4	2
34		165-56607	LM GUIDE	LMｶﾞｲﾄﾞ	1
35		SM-6041402-TP	SCREW M4 L=14	ﾛﾂｶｸｱﾅﾎﾞﾙﾄ M4	1
36		WS-0410002-KN	SPRING WASHER	ﾊﾞﾈｼﾞｶﾞﾈ M4	1
37		WP-0430800-SC	WASHER M4	ﾋﾗﾜﾞｶﾞﾈ ｺｶﾞﾀﾏﾙ M4	1
38		SM-6031402-TP	SCREW	ﾛﾂｶｸｱﾅﾎﾞﾙﾄ	4
39		WS-0310002-KN	SPRING WASHER M3	ﾊﾞﾈｼﾞｶﾞﾈ 3.1X5.9X0.7	4
40		165-50402	COLLAR B	ﾛｯﾄﾞｴﾝﾄﾞｶﾗｰB	1
41		SM-6042502-TP	SCREW M4X0.7 L=25	ﾛﾂｶｸｱﾅﾎﾞﾙﾄ M4X0.7 L=25	1
42		165-50204	CONNECTING ROD	ﾚﾝｹﾂﾛｯﾄﾞ	1
43		165-56409	ROD END	ﾛｯﾄｴﾝﾄﾞﾂﾞｸｳｹ	1
44		165-56300	ROD END	ﾛｯﾄｴﾝﾄﾞﾂﾞｸｳｹ	1
45		NM-6040001-SC	NUT M4	ﾛﾂｶｸﾅﾂﾄ M4	1
46		GBR-01175000	ROD END NUT, LEFT	ﾛｯﾄﾞｴﾝﾄﾞ ﾅﾂﾄ ﾋﾀﾞﾘ	1
47		NM-6040001-SC	NUT M4	ﾛﾂｶｸﾅﾂﾄ M4	1
48		WS-0410002-KN	SPRING WASHER	ﾊﾞﾈｼﾞｶﾞﾈ M4	1
49		WP-0430800-SC	WASHER M4	ﾋﾗﾜﾞｶﾞﾈ ｺｶﾞﾀﾏﾙ M4	1
50		GBR-108550A0	DC MOTOR ASM.	ｽﾘﾓﾐDCﾓｰﾀｸﾐ	1
51		GBR-11110000	PINION, A	ｽﾘﾓﾐﾛｯﾄﾞﾊｸﾞﾙﾏ A	1
52		165-56508	SPRIT	ｷｭｳﾒﾝｼﾞｸｳｹ	1
53		182-06201	ROTATING ROD	ｶｲﾃﾝﾛｯﾄﾞ	1
54		GBR-11109000	BRACKET	ｽﾘﾓﾐﾓｰﾀﾞﾌﾞﾗｹｯﾄ	1
55		GBR-11111000	PINION, B	ｽﾘﾓﾐﾛｯﾄﾞﾊｸﾞﾙﾏ B	1
56		GBR-11114000	WASHER	ｽﾗｽﾄﾜｯｼｬ	3
57		E5006-171-000	PS BEARING	P.S ﾂﾞｸｳｹ	3
58		SD-0600651-TP	HINGE SCREW	ﾀﾞﾝﾈｼﾞ D=6 H=6.5	3
59		WP-0430801-SC	WASHER 4.3X9X0.8	ﾋﾗﾜﾞｶﾞﾈ 4.3X9X0.8	1
60		WS-0410002-KN	SPRING WASHER	ﾊﾞﾈｼﾞｶﾞﾈ M4	1
61		NS-6110360-SP	NUT	ﾛﾂｶｸﾅﾂﾄ	1
62		GBR-11115000	MOTOR SPACER.	ﾓｰﾀｽﾍﾟｰｻ	3
63		SM-1031401-SC	SCREW M3X0.5 L=14	ｻﾗﾈｼﾞ M3X0.5 L=14	3
64		B1649-161-000	TENSION SPRING ADJUSTING SCREW	ﾋﾂﾊﾟﾘﾊﾞﾈ ﾁｮｰﾋﾂﾈｼﾞ	1
65		NS-6110360-SP	NUT	ﾛﾂｶｸﾅﾂﾄ	1
66		GBR-11113000	LINK	ｽﾘﾓﾐﾘﾝｸ	1

From the Library of Superior Sewing Machine & Supply LLC

8. DRIVE CAM COMPONENTS

カム関係

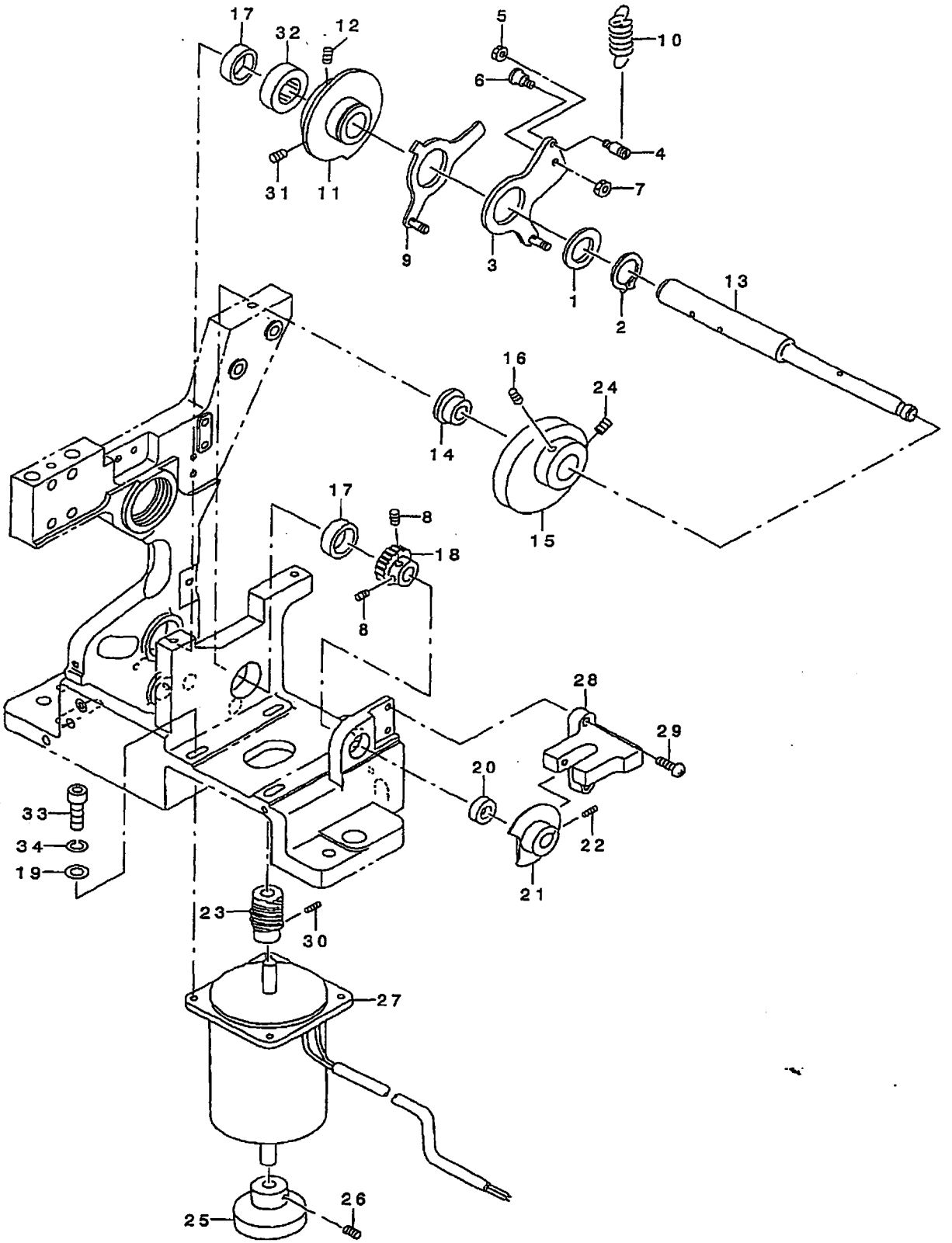

From the Library of Superior Sewing Machine & Supply LLC

REF. NO	NOTE	PART NO.	DESCRIPTION	ヒンメイ	Qty
1		GBR-01120000	COLLAR	カラー	1
2		RC-2500001-KP	RETAINING RING 25	Cガタトメワ 25	1
3		182-17950	START TIMING CAM ASM.	スタートタイミングカムクミ	1
4		165-62803	HOOK	スタートカムヒキアゲフック	1
5		NM-6040001-SC	NUT M4	ロッカクナット M4	1
6		165-62902	HINGE SCREW	ニダンスイッチダンウワネジ	1
7		NM-6050001-SC	NUT M5	ロッカクナット M5X0.8 1シュ	1
8		SM-8050602-TP	SCREW M5 L=6	トメネジ M5X0.8 L=6	2
9		182-27553	HOLDING CLAMP DRIVE CAM ASM.	ヌノオサエサゲカムクミ	1
10		B1426-771-000	SPRING	ハリフリア ヒッパリバネ A	1
11		182-07209	DOUBLE CAM	ツマミアシダブルカム	1
12		SM-8050612-TP	SCREW M5X6	トメネジ M5X0.8 L=6	1
13		182-07506	CAM SHAFT	カムシャフト	1
14		165-60104	CAM SHAFT COLLAR 1	カムジクカラー1	1
15		165-61607	SPINNER OSCILLATING ARM CAM	センカイアームカム	1
16		SM-8050812-TP	SCREW M5X8	トメネジ M5X0.8 L=8	1
17		GBR-01168000	NEEDLE BEARING 3	ニードルベアリング	2
18		165-62001	WORM WHEEL	ウォームホイール	1
19		WP-0641600-SC	WASHEW 6.4X12.5X1.6	ヒラザガネ	4
20		165-62308	NEEDLE BEARING	ニードルベアリング	1
21		165-60302	SENSOR DOCK	カムジクセンサードック	1
22		SM-8040602-TP	SCREW M4X0.7 L=6	トメネジ	1
23		165-62100	WORM GEAR	ウォームギアー	1
24		SM-8050842-TP	SETSCREW	トメネジ	1
25		165-61904	MOTOR KNOB	アームモーターツマミ	1
26		SM-8050602-TP	SCREW M5 L=6	トメネジ M5X0.8 L=6	1
27		GBR-108590A0	DC MOTOR ASM.	センカイアーADCモータークミ	1
28		HD-0003600-00	PHOTO MICRO SENSOR	フオト マイクロ センサ	1
29		SL-4031081-SC	SCREW M3 X 10	ナベネジ セムス M3 L=10	2
30		SM-8040402-TP	SCREW M4X0.7 L=4	トメネジ M4X0.7 L=4	2
31		SM-8050842-TP	SETSCREW	トメネジ	1
32		165-60203	CAM SHAFT COLLAR 2	カムジクカラー2	1
33		SM-6062002-TP	SCREW M6 L=20	ロッカクアナボルト M6 L=20	4
34		WS-0610002-KN	SPRING WASHER 6.1X12.2X1.5	ハネザガネ M6	4

From the Library of Superior Sewing Machine & Supply LLC

9. INDEX COMPONENTS (1)
インデックス関係（1）

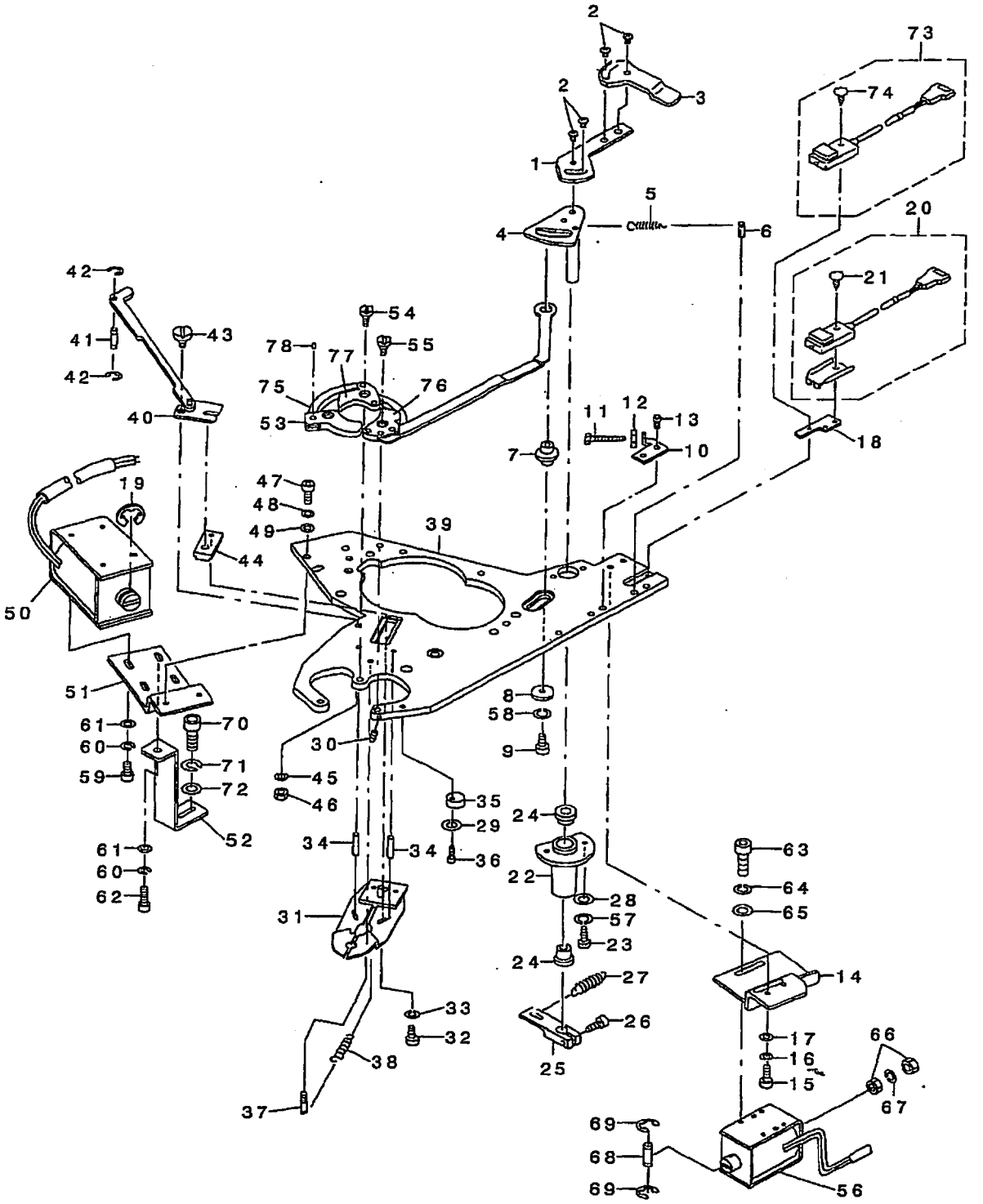

From the Library of Superior Sewing Machine & Supply LLC

REF.NO	NOTE	PART NO.	DESCRIPTION	ヒンメイ	Qty
1		165-66507	CHECK DOG	ﾐﾂｿﾞﾒﾄﾞｯｸ	1
2		SM-0040601-SC	SCREW M4X0.7 L=6	ﾄﾗｽｺﾈｼﾞ M4X0.7 L=6	4
3		165-74105	DOG	ｽﾘﾓﾐﾓﾝｻﾄﾞｯｸﾞ	1
4		165-66002	SPINNER CAM	ｲﾁｷﾞﾒｶﾑ	1
5		165-53208	SPRING	ｽﾘﾓﾐﾐｼﾞｮｳｼｮｳﾊﾞﾈ	1
6		182-18909	DW PIN 4X12	DWﾋﾟﾝ 4X12	1
7		165-65707	SHAFT (1)	ｼﾞｸ(3)	1
8		B2107-816-000-A	WASHER	ﾆｼﾞﾕｰｶﾝ ﾛｯﾄﾞ ｼﾞｶﾞﾈ	1
9		SM-6041002-TP	SCREW M4 L=10	ﾛｯｶｸﾌﾅﾎﾞﾙﾄ M4X0.7 L=10	1
10		165-66606	STOPPER BKT	ｲﾁｷﾞﾒｽﾄｯﾊﾟｰBKT	1
11		SM-8042502-TP	SCREW M4X0.7 L=25	ﾄﾒﾈｼﾞ M4X0.7 L=25	1
12		NM-6040001-SC	NUT M4	ﾛｯｶｸﾅｯﾄ M4	1
13		SM-6040802-TR	SCREW M4X0.7 L=8	ﾛｯｶｸﾌﾅﾎﾞﾙﾄ M4X0.7 L=8	2
14		165-67000	BRACKET (1)	ﾌﾞﾗｹｯﾄ(1)	1
15		SM-6041002-TP	SCREW M4 L=10	ﾛｯｶｸﾌﾅﾎﾞﾙﾄ M4X0.7 L=10	2
16		WS-0410002-KN	SPRING WASHER	ﾊﾞﾈｼﾞｶﾞﾈ M4	2
17		WP-0430800-SC	WASHER M4	ﾋﾗｼﾞｶﾞﾈ ｺｶﾞﾀﾏﾙ M4	2
18		165-74006	BRACKET	ｽﾘﾓﾐﾓﾝﾌﾞﾗｹｯﾄ	1
19		RE-1200000-K0	E-RING 12	Eｶﾞﾀﾄﾒﾘ 12	1
20		GBR-108430A0	RUB COMPLETION SWITCH ASM.	ｽﾘﾓﾐｶﾝﾘﾖｳｽｲｯﾁｸﾐ	1
21		SM-0861201-SA	SCREW	ﾄﾗｽﾈｼﾞ M2.6 L=12	(1)
22		165-65905	CUPLING	ﾊｳｽ	1
23		SM-6041002-TP	SCREW M4 L=10	ﾛｯｶｸﾌﾅﾎﾞﾙﾄ M4X0.7 L=10	2
24		165-72406	METAL	ｶﾞﾝﾕﾒﾀﾙ	2
25		165-66408	LINK LEVER	ﾘﾝｸﾚﾊﾞｰ	1
26		SM-6041202-TP	SCREW M4X0.7 L=12	ﾛｯｶｸﾌﾅﾎﾞﾙﾄ	1
27		182-01608	SPRING, 2	ﾀﾞﾌﾞﾙｶﾑﾓﾄﾞﾗﾊﾞﾈ2	1
28		WP-0430800-SC	WASHER M4	ﾋﾗｼﾞｶﾞﾈ ｺｶﾞﾀﾏﾙ M4	2
29		WP-0430800-SC	WASHER M4	ﾋﾗｼﾞｶﾞﾈ ｺｶﾞﾀﾏﾙ M4	1
30		SM-8030402-TP	SCREW M3X0.5 L=4	ﾄﾒﾈｼﾞ	1
31		165-67166	SHUTTER PLATE ASM.	ｼｬｯﾀｰｲﾀｸﾐ	1
32		SM-6041202-TP	SCREW M4X0.7 L=12	ﾛｯｶｸﾌﾅﾎﾞﾙﾄ	1
33		WS-0410002-KN	SPRING WASHER	ﾊﾞﾈｼﾞｶﾞﾈ M4	1
34		182-04107	PIN	ﾍｲｺｳﾋﾟﾝ 3*12	2
35		182-09502	ECCENTRIC STOPPER	ﾍﾝﾃﾝｽﾄｯﾊﾟ	1
36		SM-6041202-TP	SCREW M4X0.7 L=12	ﾛｯｶｸﾌﾅﾎﾞﾙﾄ	1
37		182-19204	DW PIN 4*18	DWﾋﾟﾝ 4*18	1
38		165-54008	SPRING	ﾋｯﾊﾟﾘﾊﾞﾈ	1
39		182-17505	TOP PLATE	ﾃﾝｲﾀ	1
40		165-67802	LINK PLATE	ﾘﾝｸｲﾀ	1
41		165-72505	PIN	ｼｬｯﾀｰﾌﾚﾉｲﾄﾞﾋﾟﾝ	1
42		RE-0250000-K0	E-RING 2.5	Eｶﾞﾀﾄﾒﾘ 2.5	2
43		165-67901	HING SCREW	ﾋﾝｼﾞﾈｼﾞ	1
44		165-73305	SLIDER BLOCK	ｽﾍﾞﾘｺ	1
45		WS-0410002-KN	SPRING WASHER	ﾊﾞﾈｼﾞｶﾞﾈ M4	2
46		NM-6040001-SC	NUT M4	ﾛｯｶｸﾅｯﾄ M4	2
47		SM-6041002-TP	SCREW M4 L=10	ﾛｯｶｸﾌﾅﾎﾞﾙﾄ M4X0.7 L=10	2
48		WS-0410002-KN	SPRING WASHER	ﾊﾞﾈｼﾞｶﾞﾈ M4	2
49		WP-0430800-SC	WASHER M4	ﾋﾗｼﾞｶﾞﾈ ｺｶﾞﾀﾏﾙ M4	2
50		GBR-10853000	MAGNET	ｼｬｯﾀｰﾏｸﾞﾈｯﾄ	1
51		165-68206	BRACKET (2)	ﾌﾞﾗｹｯﾄ(2)	1
52		165-74204	SUPPORT PLATE	ｻﾎﾟｰﾄｲﾀ	1
53		182-04909	CHECK, E	ﾂﾒ E	1
54		165-65400	HING PIN (2)	ﾋﾝｼﾞﾋﾟﾝ(2)	2
55		165-65509	HING PIN (1)	ﾋﾝｼﾞﾋﾟﾝ(1)	1
56		GBR-10854000	MAGNET	ｲﾁｷﾞﾒﾏｸﾞﾈｯﾄ	1
57		WS-0410002-KN	SPRING WASHER	ﾊﾞﾈｼﾞｶﾞﾈ M4	2
58		WS-0410002-KN	SPRING WASHER	ﾊﾞﾈｼﾞｶﾞﾈ M4	1
59		SM-6040802-TP	SCREW M4X0.7 L=8	ﾛｯｶｸﾌﾅﾎﾞﾙﾄ	3
60		WS-0410002-KN	SPRING WASHER	ﾊﾞﾈｼﾞｶﾞﾈ M4	4
61		WP-0430800-SC	WASHER M4	ﾋﾗｼﾞｶﾞﾈ ｺｶﾞﾀﾏﾙ M4	4
62		SM-6041202-TP	SCREW M4X0.7 L=12	ﾛｯｶｸﾌﾅﾎﾞﾙﾄ	1
63		SM-6040802-TP	SCREW M4X0.7 L=8	ﾛｯｶｸﾌﾅﾎﾞﾙﾄ	2
64		WS-0410002-KN	SPRING WASHER	ﾊﾞﾈｼﾞｶﾞﾈ M4	2
65		WP-0430800-SC	WASHER M4	ﾋﾗｼﾞｶﾞﾈ ｺｶﾞﾀﾏﾙ M4	2
66		NM-6040001-SC	NUT M4	ﾛｯｶｸﾅｯﾄ M4	2
67		WS-0410002-KN	SPRING WASHER	ﾊﾞﾈｼﾞｶﾞﾈ M4	1
68		165-57209	PIN	ﾄﾒﾘﾖｳﾋﾟﾝEﾘﾝｸﾞﾂｹ	1
69		RE-0200000-K0	E-RING	Eｶﾞﾀﾄﾒﾘ 2	2
70		SM-6061602-TP	SCREW M6 L=16	ﾛｯｶｸﾌﾅﾎﾞﾙﾄ	1
71		WS-0610002-KN	SPRING WASHER 6.1X12.2X1.5	ﾊﾞﾈｼﾞｶﾞﾈ M6	1
72		WP-0641600-SC	WASHEW 6.4X12.5X1.6	ﾋﾗｼﾞｶﾞﾈ	1
73		GBR-108440A0	BUTTON SENSOR SWITCH ASM.	ｲﾁｷﾞﾒﾎﾞﾀﾝｹﾝﾁｽｲｯﾁｸﾐ	1
74		SM-0861201-SA	SCREW M2.6 L=12	ﾄﾗｽﾈｼﾞ M2.6 L=12	(1)
75		165-65301	STITCH TONGUE LINK	ﾂﾒﾘﾝｸ	2
76		182-02101	CHECK, C	ﾂﾒ C	1
77		182-02200	CHECK, D	ﾂﾒ D	1
78		165-72000	PIN	ﾍｲｺｳﾋﾟﾝ	5

From the Library of Superior Sewing Machine & Supply LLC

10. INDEX COMPONENTS (2)

インデックス関係（2）

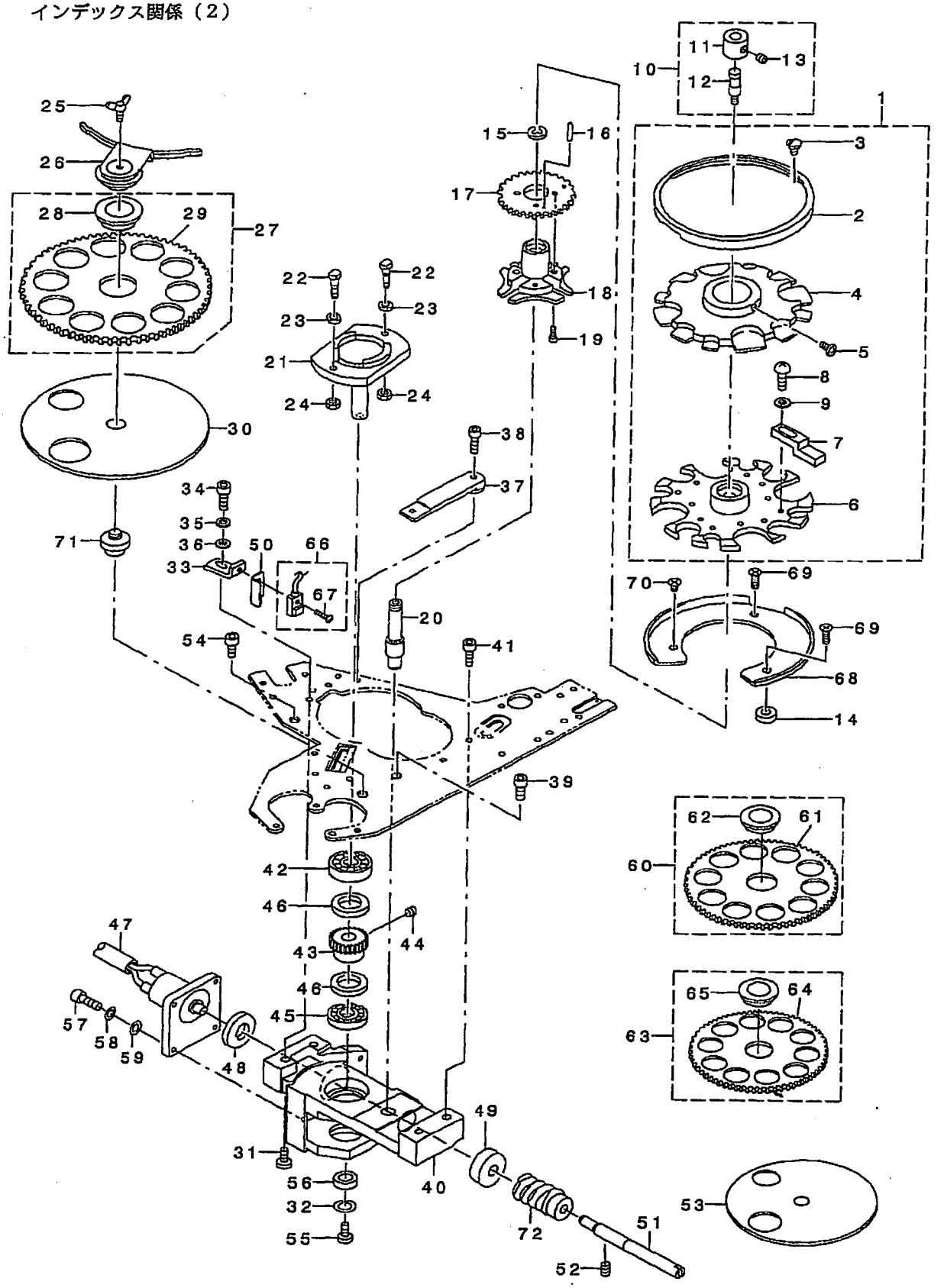

From the Library of Superior Sewing Machine & Supply LLC

REF. NO	NOTE	PART NO.	DESCRIPTION	ヒ ン メ イ	Qty
1		182-01962	FEED ACROSS PLATE ASM. A	ｵｸﾘｲﾀ ﾁｮｳｾｲﾖｳ A ｸﾐ	1
2		165-73701	RING	ﾁｮｲｽﾘﾝｸﾞ	(1)
3		SM-0040601-SC	SCREW M4X0.7 L=6	ﾄﾗｽｺﾈｼﾞ M4X0.7 L=6	(2)
4		182-03307	ADJUSTING PLATE	ﾁｮｳｾｲｲﾀ	(1)
5		SM-4040801-SF	SCREW M4X0.7 L=8	ﾅﾍﾞｺﾈｼﾞ M4X0.7 L=8	(1)
6		182-01905	FEED PLATE A	ｵｸﾘｲﾀ A	(1)
7		182-02002	BUTTON ADJUST A	ﾎﾞﾀﾝｱﾌﾞﾔｽﾄ A	(8)
8		SM-4860501-SC	SCREW M 2.6 X 5	ﾅﾍﾞｺﾈｼﾞ M2.6 L=5	(8)
9		WP-0280500-SC	WASHER	ﾋﾗﾃﾞｶﾞﾈ ｺｶﾞﾀﾏﾙ M2.5	(8)
10		182-13454	LOCK SCREW ASM.	ﾛｯｸﾈｼﾞｸﾐ	1
11		182-13405	LOCK COLLAR	ﾛｯｸｶﾗｰ	(1)
12		182-13504	LOCK SHAFT	ﾛｯｸｼﾞｸ	(1)
13		SM-8050502-TP	SCREW M5 L=5	ﾄﾒﾈｼﾞ	(1)
14		165-73008	COLLAR	ｻﾗｶﾗｰ	2
15		165-71903	CLIP	ﾋﾟﾈﾊﾞﾄﾒﾜ	1
16		182-04206	PIN	ﾍｲｺｳﾋﾟﾝ(3*18)	1
17		165-69600	GEAR	ｼｮｳﾊｸﾞﾙﾏ	1
18		165-69501	GENEVA	ﾋﾟﾈﾊﾞ	1
19		SM-6030802-TP	SCREW M3X0.5 L=8	ﾛｯｶｸｱﾅﾎﾞﾙﾄ M3X0.5 L=8	2
20		182-19501	DIVIDING MAIN SHAFT	ﾜﾘﾀﾞｼｭｼｭﾃﾞｸ	1
21		165-70103	WHEEL	ﾋﾟﾈﾊﾞﾎｲｰﾙ	1
22		165-70202	SCREW	ｶﾑﾌｫﾛｱﾌﾞｸ	2
23		165-70301	COLLAR	ﾋﾟﾈﾊﾞｶﾗｰ	2
24		NM-6040001-SC	NUT M4	ﾛｯｶｸﾅｯﾄ M4	2
25		182-04503	WING BOLT	ﾁｮｳﾎﾞﾙﾄ	1
26		165-68909	COVER CAP	ｷｬｯﾌﾟ (ｾｯﾄ)	1
27	#01	182-00352	FEED PLATE CIRCLE 16 ASM.	ｵｸﾘｲﾀﾏﾙ16ｸﾐ	1
28		165-72703	METAL	ｵｸﾘﾊｸﾞﾙﾏﾒﾀﾙ	(1)
29		182-00303	FEED PLATE 16	ｵｸﾘｲﾀ 16	(1)
30		165-68404	FERRULE DISC	ｳｹﾃﾞﾗ	1
31		SM-6052002-TP	SCREW M5 L=20	ﾛｯｶｸｱﾅﾎﾞﾙﾄ M5X0.8 L=20	1
32		WS-0410002-KN	SPRING WASHER	ﾊﾞﾈﾃﾞｶﾞﾈ M4	1
33		165-70707	SENSOR BRACKET	INDEXｾﾝｻｰｱﾌﾞﾗｹｯﾄ	1
34		SM-6040802-TR	SCREW M4X0.7 L=8	ﾛｯｶｸｱﾅﾎﾞﾙﾄ M4X0.7 L=8	1
35		WS-0410002-KN	SPRING WASHER	ﾊﾞﾈﾃﾞｶﾞﾈ M4	1
36		WP-0430800-SC	WASHER M4	ﾋﾗﾃﾞｶﾞﾈ ｺｶﾞﾀﾏﾙ M4	1
37		165-70905	STAND PLATE (1)	ﾀﾞｲﾀﾞ(1)	1
38		SM-6041202-TP	SCREW M4X0.7 L=12	ﾛｯｶｸｱﾅﾎﾞﾙﾄ	1
39		SM-6051202-TP	SCREW M5X0.8 L=12	ﾛｯｶｸｱﾅﾎﾞﾙﾄ M5X0.8 L=12	1
40		182-19600	GENEVA HOUSE	ﾋﾟﾈﾊﾞﾊｳｽ	1
41		SM-6051602-TP	SCREW M5X0.8 L=16	ﾛｯｶｸｱﾅﾎﾞﾙﾄ M5X0.8 L=16	3
42		SB-1100004-00	BALL BEARING	ﾎﾞｰﾙﾍﾞｱﾘﾝｸﾞ	1
43		165-62001	WORM WHEEL	ｳｫｰﾑﾎｲｰﾙ	1
44		SM-8050602-TP	SCREW M5 L=6	ﾄﾒﾈｼﾞ M5X0.8 L=6	2
45		165-71804	BEARING A	ﾍﾞｸｳｹA	1
46		165-73909	THRUST COLLAR	INDEXｶﾗｰ	2
47		GBR-108560A0	DC MOTOR ASM.	ｲﾝﾃﾞｯｸｽDCﾓｰﾀｸﾐ	1
48		165-70509	THRUST COLLAR	INDEXﾓｰﾀｰｶﾗｰ	1
49		165-71408	NEEDLE BEARING	ﾆｰﾄﾞﾙﾍﾞｱﾘﾝｸﾞ	1
50		182-12902	SENSOR COVER	ｲﾝﾃﾞｯｸｽｾﾝｻｶﾊﾞｰ	1
51		165-70608	SHAFT	ｼｬﾄﾞｳﾓﾉｶｲﾗﾞｸ	1
52		SM-8040402-TP	SCREW M4X0.7 L=4	ﾄﾒﾈｼﾞ M4X0.7 L=4	2
53	#03	182-01103	HOLDING PLATE (SMALL)	ｳｹﾃﾞﾗ(ｼｮｳ)	1
54		SM-6051202-TP	SCREW M5X0.8 L=12	ﾛｯｶｸｱﾅﾎﾞﾙﾄ M5X0.8 L=12	1
55		SM-6041002-TP	SCREW M4 L=10	ﾛｯｶｸｱﾅﾎﾞﾙﾄ M4X0.7 L=10	1
56		B2107-816-000	WASHER	ﾛｯﾄﾞﾃﾞｶﾞﾈ	1
57		SM-6030802-TP	SCREW M3X0.5 L=8	ﾛｯｶｸｱﾅﾎﾞﾙﾄ M3X0.5 L=8	4
58		WS-0310002-KN	SPRING WASHER M3	ﾊﾞﾈﾃﾞｶﾞﾈ 3.1X5.9X0.7	4
59		WP-0320500-SC	WASHER M3	ﾋﾗﾃﾞｶﾞﾈ ｺｶﾞﾀﾏﾙ M3	4
60	#02	165-68651	FEED PLATE 22B ASM.	ｵｸﾘｲﾀ22Bｸﾐ	1
61	#02	165-68602	FEED PLATE 22B	ｵｸﾘｲﾀ22B	(1)
62		165-72703	METAL	ｵｸﾘﾊｸﾞﾙﾏﾒﾀﾙ	(1)
63	#03	182-00956	FEED PLATE CIRCLE 13.5 ASM.	ｵｸﾘｲﾀﾏﾙ13.5ｸﾐ	1
64	#03	182-00907	FEED PLATE 12.5	ｵｸﾘｲﾀ 12.5	(1)
65		165-72703	METAL	ｵｸﾘﾊｸﾞﾙﾏﾒﾀﾙ	(1)
66		GBR-108450A0	INDEX STARTING SWITCH ASM.	ｲﾝﾃﾞｯｸｽｽﾀｰﾃｨﾝｸﾞｽｲｯﾁｸﾐ	1
67		SM-0861201-SA	SCREW	ﾄﾗｽﾈｼﾞ M2.6 L=12	(1)
68		165-69204	REST	ｻﾗ	1
69		SM-1041201-SC	SCREW M4 L=12	ﾅﾗｺﾈｼﾞ M4X0.7 L=12	2
70		SM-1040601-SC	SCREW M4X0.7 L=6	ﾅﾗｺﾈｼﾞ M4X0.7 L=6	1
71		182-18008	SHAFT (2)	ｼﾞｸ(2)	1
72		165-71606	WORM GEAR	ﾋﾟﾈﾊﾞｳｫｰﾑｷﾞｱ	1

NOTE (注記)

#01....FOR SMALL-SIZED BUTTON — 小ﾎﾞﾀﾝ用
#02....FOR MEDIUM-SIZED BUTTON — 中ﾎﾞﾀﾝ用
#03....OPTIONAL PARTS — ｵﾌﾟｼｮﾝ部品

From the Library of Superior Sewing Machine & Supply LLC

11. FEEDER BALL COMPONENTS

フィダーボール関係

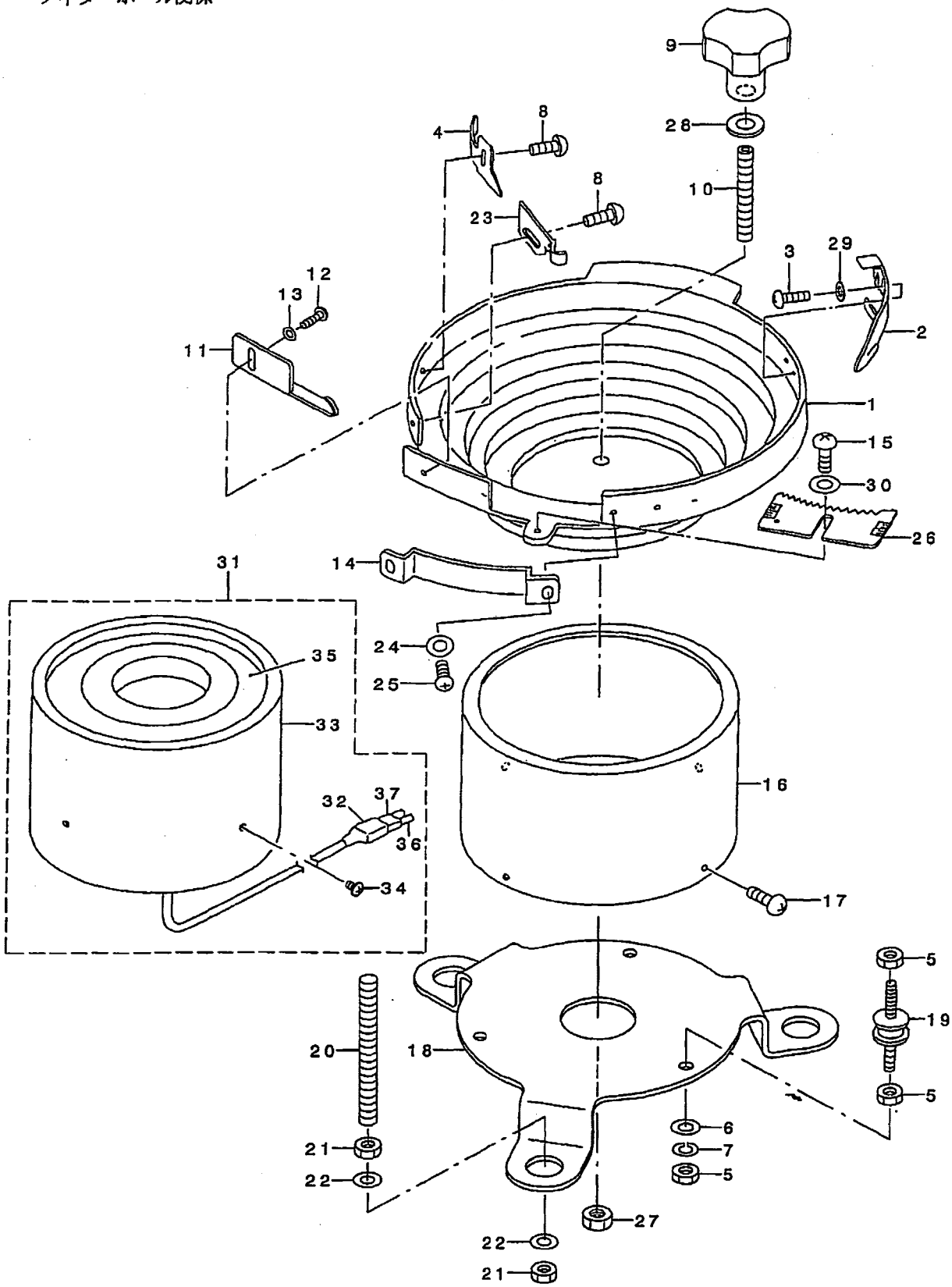

From the Library of Superior Sewing Machine & Supply LLC

REF. NO	NOTE	PART NO.	DESCRIPTION	ﾋﾞﾝﾒｲ	Qty
1		165-77009	FEEDER BOWL	ﾌｨｰﾀﾞｰﾎﾞｰﾙ	1
2		GBR-01426000	GUIDE PLATE	ｱﾝﾅｲｲﾀ	1
3		SS-4110815-SP	SCREW 11/64-40 L=8	ﾅﾍﾞﾈｼﾞ 11/64-40 L=8	2
4		GBR-01441000	BUTTON STANDING PREVENT PLATE	ﾎﾞﾀﾝﾀﾁ ﾎﾞｰｼｲﾀ	1
5		NM-6060001-SC	NUT M6	ﾛｯｶｸﾅｯﾄ M6 1ｼｭ	9
6		WP-0641600-SC	WASHEW 6.4X12.5X1.6	ﾋﾗｻﾞｶﾞﾈ	3
7		WS-0610002-KN	SPRING WASHER 6.1X12.2X1.5	ﾊﾞﾈｻﾞｶﾞﾈ M6	3
8		SM-4040801-SN	SCREW M4 L=8	ﾅﾍﾞｺﾈｼﾞ M4X0.7 L=8	2
9		182-04602	BOWL FIXING KNOB	ﾎﾞｳﾙｺﾃｲﾉﾌﾞ	1
10		SM-8086012-TP	SCREW M8 L=60	ﾄﾒﾈｼﾞ M8 L=60	1
11		165-77504	SELECTOR PLATE	ｾｲﾚﾂｲﾀ	1
12		SM-4040801-SN	SCREW M4 L=8	ﾅﾍﾞｺﾈｼﾞ M4X0.7 L=8	1
13		WP-0430800-SC	WASHER M4	ﾋﾗｻﾞｶﾞﾈ ｺｶﾞﾀﾏﾙ M4	1
14		GBR-01428000	GUIDE PLATE	ｶﾞｲﾄﾞｲﾀ	1
15		SM-4051001-SN	SCREW M5	ﾅﾍﾞｺﾈｼﾞ M5X0.8 L=10	1
16		165-77207	P/F COVER	P/Fｶﾊﾞｰ	1
17		SM-0040601-SC	SCREW M4X0.7 L=6	ﾄﾗｽｺﾈｼﾞ M4X0.7 L=6	4
18		400-14217	P/F INSTALLING BASE	P/Fﾄﾘﾂｹｲﾀ	1
19		165-79203	RUBBER VIBRATION INSULATOR	ﾎﾞｳｼﾝｺﾞﾑ	3
20		165-77306	MOUNTING BOLT	ﾛｯｶｸﾎﾞｳ	3
21		NM-6080001-SC	NUT M8X1.25	ﾛｯｶｸﾅｯﾄ M8 1ｼｭ	6
22		165-77405	WASHER	ｻﾞｶﾞﾈ	6
23		182-02408	BUTTON GUIDE A	ﾎﾞﾀﾝｶﾞｲﾄﾞA	1
24		WP-0320500-SC	WASHER M3	ﾋﾗｻﾞｶﾞﾈ ｺｶﾞﾀﾏﾙ M3	2
25		SM-4030601-SN	SCREW M3 X 6	ﾅﾍﾞｺﾈｼﾞ M3X0.5 L=6	2
26		GBR-014220A0	SELECTION PLATE ASM. (SMALL)	ｾﾝﾍﾞﾂｲﾀｼｮｳｸﾐ	1
27		NM-6080001-SC	NUT M8X1.25	ﾛｯｶｸﾅｯﾄ M8 1ｼｭ	1
28		WP-0841601-SC	WASHER 8.4X17.4X1.6	ﾋﾗｻﾞｶﾞﾈ ﾐｶﾞｷﾏﾙ M8	1
29		WP-0450801-SD	WASHER 4.5X10X0.8	ﾋﾗｻﾞｶﾞﾈ 4.5X10X0.8	2
30		WP-0531000-SC	WASHER 5.3X10X1	ﾋﾗｻﾞｶﾞﾈ 5.3X10X1	1
31	#01	GBR-107910A0	PARTS FEEDER ALL ASM.	ﾊﾟｰﾂﾌｨｰﾀﾞｰｸﾐ	1
32		HK-0044900-20	CONNECTOR COVER	ｺﾈｸﾀ ｶﾊﾞｰ	(1)
33		165-77207	P/F COVER	P/Fｶﾊﾞｰ	(1)
34		SM-0040601-SC	SCREW M4X0.7 L=6	ﾄﾗｽｺﾈｼﾞ M4X0.7 L=6	(4)
35		GBR-10791000	PARTS FEEDER	ﾊﾟｰﾂﾌｨｰﾀﾞｰ	(1)
36		HK-0044400-20	2-POLE RECEPTACLE	ﾘｾﾌﾟﾀｸﾙ 2P	(1)
37		D6042-555-B00	PIN TERMINAL, FEMALE	ﾋﾟﾝ ﾀｰﾐﾅﾙ ﾒｽ	(2)

NOTE (注記) #01....FOR USE IN JAPAN AND GENERAL EXPORT 日本・一般輸出用

From the Library of Superior Sewing Machine & Supply LLC

12. TABLE & COVER COMPONENTS

脚卓・カバー関係

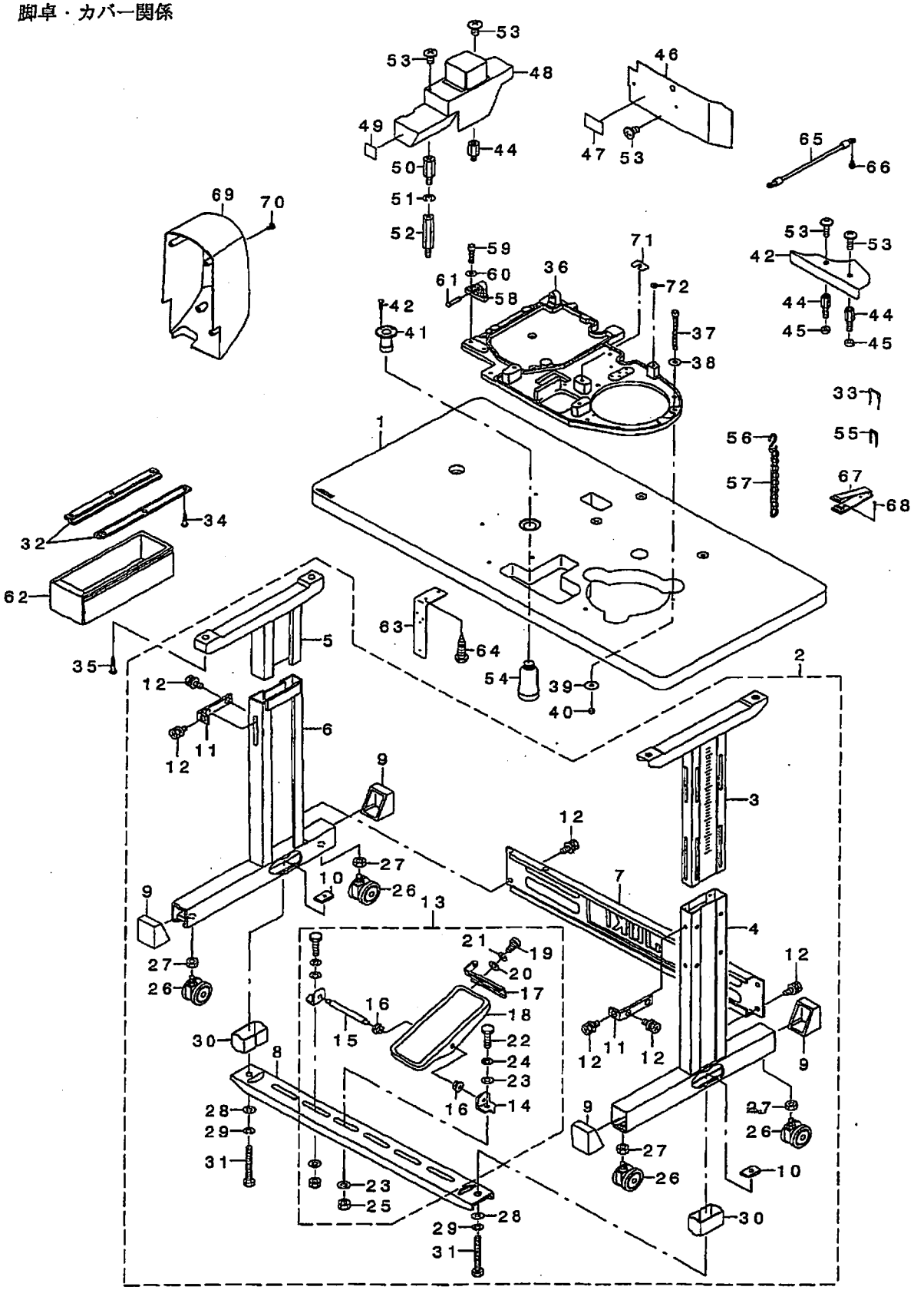

From the Library of Superior Sewing Machine & Supply LLC

REF. NO	NOTE	PART NO.	DESCRIPTION	ヒンメイ	Qty
1		400-14240	TABLE	テーブル	1
2	#02	141-91951	T-STAND COMPL.	Tキャクケツゴウ	1
3		141-18152	UPPER STAND ASM.,RIGHT	ウワキャクケツゴウ(ミギ)	(1)
4		141-18251	STAND ASM.,RIGHT	シチユウケツゴウ(ミギ)	(1)
5		B8101-210-AAB	UPPER STAND ASM.	ウエキャクケツゴウ	(1)
6		B8105-210-AAA	STAND ASM.	シチユウケツゴウ	(1)
7		111-58300	STAND SIDE SUPPORT	ヨコ シチユウ	(1)
8		111-58409	STAND SIDE SUPPORT	タテ シチユウ	(1)
9		111-58607	RUBBER CAP	キャク ドダイ キャップ	(4)
10		170-07402	NUT	44カクナット	(2)
11		111-58516	UPPER STAND PLATE	ウワキャクトメイタ	(2)
12		SL-9082091-SE	WASHER HEXAGONAL BOLT	ザガネツキロツカクボルト	(10)
13		138-17754	Z-STAND PEDAL ASM.	Zキャクヨウ ペダル(ケツゴウ)	(1)
14		111-59001	PEDAL SHAFT BRACKET	フミイタ ジクウケ	(2)
15		B8153-771-000	PEDAL CONNECTING ROD	ペダルジク	(1)
16		D8113-555-B00	PEDAL BUSHING	フミイタ ブシユ	(2)
17		GPF-06080000	PEDAL ADJUSTING PLATE	フミイタ チヨウセツバン	(1)
18		GPF-060600A0	PEDAL ASM.	ペダル(ケツゴウ)	(1)
19		SM-9061203-SE	SCREW M6 L=12	ロツカクボルト M6 L=12	(2)
20		WP-0671016-SE	WASHER 6.7X13X1	ヒラザガネ 6.7X13X1	(2)
21		WS-0621210-KR	SPRING WASHER 6.2X11.4X1.2	バネザガネ 6.2X11.4X1.2	(2)
22		SM-9082023-SE	SCREW M8 L=20	ロツカクボルト M8 L=20	(2)
23		WP-0871602-SE	WASHER 8.7X18X1.6	ヒラザガネ 8.7X18X1.6	(4)
24		WS-0861410-KR	SPRING WASHER 8.6X15X1.4	バネザガネ 8.6X15X1.4	(2)
25		NM-6080721-SE	NUT M8	ロツカクナット M8	(2)
26		B8150-210-000	CASTER	テーブルキャスタ	(4)
27		NM-6120003-SE	NUT M12	ロツカクナット M12 3シユ	(4)
28		WP-0871602-SE	WASHER 8.7X18X1.6	ヒラザガネ 8.7X18X1.6	(2)
29		WS-0861410-KR	SPRING WASHER 8.6X15X1.4	バネザガネ 8.6X15X1.4	(2)
30		111-59506	STRUT AUXILIARY PLATE	シタツチユウ ネジヨイタ	(2)
31		SM-9086523-SE	HEXAGONAL BOLT	ロツカクボルト	(2)
32	#03	111-55207	DRAWER SUPPORT	ヒキダシ ササエ	2
33		D8204-555-D00	DRAWER STOPPER	ヒキダシストツパー	3
34	#03	SK-3311601-SE	WOOD SCREW D=3.1 L=16	マルモクネジ D=3.1 L=16	6
35		SK-3483201-SE	WOOD SCREW D=4.8 L=32	マルモクネジ D=4.8 L=32	4
36		400-14216	BASE	ベース	1
37		SM-6066552-TP	BOLT	ロツカクアナボルト	6
38		WP-0612056-SD	WASHER 6.1X18.5X2	ヒラザガネ 6.1X18.5X2	6
39		WP-0651646-SC	WASHER	ヒラザガネ	6
40		NM-6060001-SC	NUT M6	ロツカクナット M6 1シユ	6
41		B8202-205-000	OIL MANAGEMENT	アブラスキ	1
42		SK-3311601-SE	WOOD SCREW D=3.1 L=16	マルモクネジ D=3.1 L=16	4
43		182-22604	FRONT COVER A	センメンカバーA	1
44		HX-0033900-00	STUD	キバンバーヲ	3
45		B3052-816-000	WASHER	クトーウケ ザガネ	2
46		400-14221	FRONT COVER B	センメンカバーB	1
47	#01	CM-3002002-B1	SAFETY LABEL 13	アンセンラベル13	1
48		400-14220	HEAD COVER	トウブカバー	1
49		165-86505	DANGER PREVENTION STICKER	キケンボウシステッカー	1
50		182-28106	SPACER B	スペーサ B	1
51		WS-0410002-KN	SPRING WASHER	バネザガネ M4	1
52		HX-0033900-0B	BOARD PARTS	キバンバーヲ	1
53		SM-0040601-SA	SCREW	トラスネジ M4 L=6	6
54		B9121-012-000	OIL CAN	アブラビン	1
55		MA0-11532000	CORD STAPLE	コードステプル	11
56	#03	B8133-019-000	S SHAPED HOOK	Sガタカナグ	2
57	#03	B8103-980-000	CHAIN	クサリ	1
58		GBR-25006000	HEAD FIXING HINGE	トウブコテイヒンジ	1
59		SM-6062502-TP	SCREW M6 L=25	ロツカクアナボルト M6 L=25	2
60		WP-0611626-SP	WASHER 15X6X1.6	ヒラザガネ	2
61		D2431-555-B00	THREAD TRIMMER SHAFT	イトキリウデ ジク	2
62	#03	111-55108	DRAWER	ヒキダシ	1
63		B5542-205-000	TERMINAL BRACKET	タンシダイブラケット	1
64		SK-3311601-SE	WOOD SCREW D=3.1 L=16	マルモクネジ D=3.1 L=16	2
65		GBR-308650A0	BASE EARTH CORD ASM.	ベースアースセンクミ	1
66		SL-4041091-SC	SCREW M4 L=10	ナベコネジ セムス M4X0.7 L=10	1
67		M9640-510-00A	CABLE CLIP	ケーブルクリップ	1
68		SK-3382001-SE	SCREW D=3.8 L=20	マルモクネジ D=3.8 L=20	2
69		400-06475	MOTOR COVER	モーターカバー	1
70		SM-5040855-SN	SCREW	バインドネジ	4
71		GBR-25010D00	BODY FRAME SPACER A	ホンタイフレームスペーサーA	3
72		WP-0621036-SP	WASHER	ヒラザガネ	1

NOTE (注記)	#01....FOR USE IN JAPAN AND GENERAL EXPORT	日本・一般輸出用
	#02....OPTIONAL PARTS	オプション部品
	#03....ACCESSORIE PARTS	付属品

From the Library of Superior Sewing Machine & Supply LLC

13. BR CONTROL BOX COMPONENTS (FOR USE IN JAPAN AND GENERAL EXPORT)

BR電装関係（日本・一般輸出用）

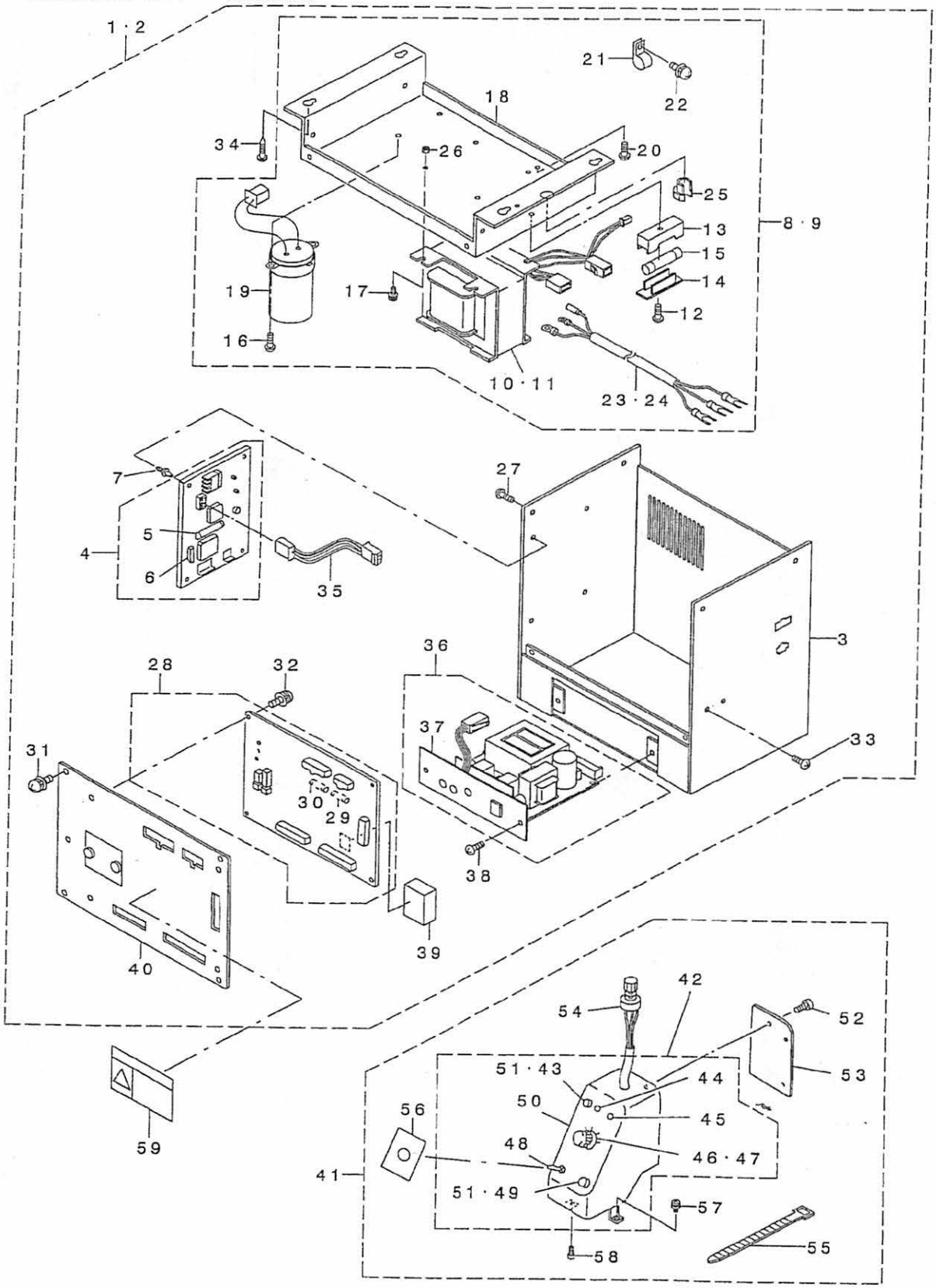

From the Library of Superior Sewing Machine & Supply LLC

REF. NO	NOTE	PART NO.	DESCRIPTION	ﾄﾞｳﾒｲ	Qty
1	#01	400-14506	CONTROL BOX B ASM	ﾃﾞﾝｿｳﾎﾞｯｸｽBｸﾐ	1
2	#02	400-14495	CONTROL BOX A ASM	ﾃﾞﾝｿｳﾎﾞｯｸｽAｸﾐ	1
3		GBR-107240A0	CONTROL BOX FRAME BODY ASM.	ﾃﾞﾝｿｳ ﾎﾞｯｸｽ ﾌﾚｰﾑﾎﾝﾀｲｸﾐ	(1)
4		GBR-107610A0	POWER BOARD	ﾃﾞﾝｹﾞﾝｷﾊﾞﾝｸﾐ	(1)
5		E9613-601-000	FUSE 2A	ｶﾞﾗｽｶﾝ ﾋｭｰｽﾞ 2A	(1)
6		HA-0029800-00	BREAKER 5A	ﾌﾞﾚｰｶｰ 5A	(1)
7		HX-0022800-0A	SPACER	ｽﾍﾟｰｻ	(4)
8	#01	GBR-107460AB	TRANS BASE B COMPLE.	ﾄﾗﾝｽﾍﾞｰｽ B ｿｳｸﾐ	(1)
9	#02	GBR-107460AA	TRANS BASE A COMPLE.	ﾄﾗﾝｽﾍﾞｰｽ A ｿｳｸﾐ	(1)
10	#02	GBR-107480AA	TRANS A ASM.	ﾄﾗﾝｽ Aｸﾐ	(1)
11	#01	GBR-107480AB	TRANS B ASM.	ﾄﾗﾝｽ Bｸﾐ	(1)
12		SM-4041001-SC	SCREW M4X0.7 L=10	ﾅﾍﾞｺﾈｼﾞ M4X0.7 L=10	(1)
13		HF-0051110-00	FUSE HOLDER	ﾋｭｰｽﾞﾎﾙﾀﾞｰ	(1)
14		HF-0051110-0B	FUSE HOLDER COVER	ﾋｭｰｽﾞﾎﾙﾀﾞｰｶﾊﾞｰ	(1)
15		E9613-601-000	FUSE 2A	ｶﾞﾗｽｶﾝ ﾋｭｰｽﾞ 2A	(1)
16		SL-4030681-SC	SCREW M3 L=6	ﾁﾞｶﾞﾈｼﾞｷ ﾅﾍﾞｺﾈｼﾞ M3 L=6	(2)
17		SL-4041291-SC	SCREW M4 L=12	ﾅﾍﾞｺﾈｼﾞ ｾﾑｽ M4 L=12	(4)
18		GBR-10747000	TRANSFORMER BASE	ﾄﾗﾝｽ ﾍﾞｰｽ	(1)
19		GBR-107430A0	CONDENSER ASM.	ｺﾝﾃﾞﾝｻｸﾐ	(1)
20		SL-4040891-SC	SCREW M4 L=8	ﾁﾞｶﾞﾈｼﾞｷ ﾅﾍﾞｺﾈｼﾞ M4 L=8	(2)
21		HX-0015000-0B	CABLE CLIP	ｹｰﾌﾞﾙ ｸﾘｯﾌﾟ	(1)
22		SL-4030881-SC	SCREW M3X8	ﾅﾍﾞｺﾈｼﾞ ｾﾑｽ M3X0.5 L=8	(1)
23	#02	GBR-107450A0	AC INPUT POWER CABLE CORD ASM.	AC ﾆｭｳﾘｮｸ ﾃﾞﾝｹﾞﾝｺｰﾄﾞｸﾐ	(1)
24	#01	GBR-107440A0	AC INPUT POWER CABLE CORD ASM.	AC ﾆｭｳﾘｮｸ ﾃﾞﾝｹﾞﾝｺｰﾄﾞｸﾐB	(1)
25		HX-0009800-00	CORD BUSH	ｺｰﾄﾞﾌﾞｯｼｭ	(1)
26		NM-6040001-SF	NUT M4	ﾛｯｶｸﾅｯﾄ M4X0.7 ﾌﾗｯﾄ	(4)
27		SL-4040891-SC	SCREW M4 L=8	ﾁﾞｶﾞﾈｼﾞｷ ﾅﾍﾞｺﾈｼﾞ M4 L=8	(4)
28		GBR-107510A0	CPU BOARD ASM.	CPUｷﾊﾞﾝｸﾐ	(1)
29		HF-0084020-P0	FUSE 2A	ﾋｭｰｽﾞ 2A	(1)
30		HF-0084063-P0	FUSE	ﾋｭｰｽﾞ	(1)
31		SL-4040891-SC	SCREW M4 L=8	ﾁﾞｶﾞﾈｼﾞｷ ﾅﾍﾞｺﾈｼﾞ M4 L=8	(4)
32		SL-4030681-SC	SCREW M3 L=6	ﾁﾞｶﾞﾈｼﾞｷ ﾅﾍﾞｺﾈｼﾞ M3 L=6	(4)
33		SL-4040891-SC	SCREW M4 L=8	ﾁﾞｶﾞﾈｼﾞｷ ﾅﾍﾞｺﾈｼﾞ M4 L=8	(2)
34		SK-3452501-SE	SCREW D=4.5 L=25	ﾏﾙﾓｸﾈｼﾞ D=4.5 L=25	(4)
35		GBR-107720A0	CPU BOARD POWER CORD ASM.	CPUｷﾊﾞﾝﾃﾞﾝｹﾞﾝｺｰﾄﾞｸﾐ	(1)
36		GBR-107740A0	P/F CONTROLLER ASM.	P/F ｺﾝﾄﾛｰﾗ ｸﾐ	(1)
37		GBR-10775000	P/F PANEL	P/Fﾊﾟﾈﾙ	(1)
38		SM-5040601-SC	SCREW M4X0.7 L=6	ﾊﾟｲﾝﾄﾞｺﾈｼﾞ M4X0.7 L=6	(2)
39		HL-0087301-40	IC	IC	(1)
40		GBR-207340A0	CONTROL BOX FRAME COVER ASM.	ﾃﾞﾝｿｳ ﾎﾞｯｸｽﾌﾚｰﾑ ﾌﾀｸﾐ	(1)
41		GBR-30784AA0	OPERATION PANEL WHOLE ASM. (A)	ｿｳｻﾊﾟﾈﾙｿｳｸﾐ(A)	1
42		GBR-107850A0	PANEL ASM.	ﾊﾟﾈﾙ ｸﾐ	(1)
43		HA-0019100-1B	OPERATION BUTTON	ｿｳｻﾌﾞﾎﾞﾀﾝ	(1)
44		HG-0029100-0A	LED (GREEN)	LED(ﾐﾄﾞﾘ)	(1)
45		HG-0029100-00	LAMP	ﾀﾞｲｵｰﾄﾞ	(1)
46		HA-0029000-00	DIP SWITCH	ﾃﾞｨｯﾌﾟｽｲｯﾁ	(1)
47		HX-0011400-0A	KNOB	ﾂﾏﾐ	(1)
48		MA0-14506000	SWITCH	ﾎﾞﾀﾝｱﾅｷﾘｶｴｽｲｯﾁ	(1)
49		HA-0019100-1C	SWITCH KNOB,BLACK	ｽｲｯﾁ ﾎﾞﾀﾝ(ｸﾛ)	(1)
50		GBR-10786000	PANEL BOX	ﾊﾟﾈﾙﾎﾞｯｸｽ	(1)
51		HA-0019100-00	PUSH SWITCH 3 TERMINAL	ﾌﾟｯｼｭｽｲｯﾁ 3ﾀﾝｼﾞ	(2)
52		SL-4030681-SC	SCREW M3 L=6	ﾁﾞｶﾞﾈｼﾞｷ ﾅﾍﾞｺﾈｼﾞ M3 L=6	(3)
53		GBR-10782000	PANEL BOX BACK COVER	ﾊﾟﾈﾙﾎﾞｯｸｽｳﾗﾌﾞﾀ	(1)
54		GBR-107870A0	VOLUME ASM.	ﾎﾞﾘｭｰﾑ ｸﾐ	(1)
55		EA-9500B01-00	CABLE BAND	ｿｸｾﾝﾊﾞﾝﾄﾞ	(1)
56		GBR-30788000	SHEEL	ﾓｰﾄﾞｷﾘｶｴﾗｰﾙ	(1)
57		SL-4041091-SC	SCREW M4 L=10	ﾅﾍﾞｺﾈｼﾞ ｾﾑｽ M4X0.7 L=10	(1)
58		SM-6040802-TN	SCREW	ﾛｯｶｸｱﾅﾎﾞﾙﾄ M4X0.7 L=8	(1)
59	#03	CM-3001001-01	DANGER LABEL (SMALL)	ﾃﾞﾝｹﾞｷｹﾝｿﾗﾍﾞﾙ(ｼｮｳ)	1

NOTE (注記)	#01....FOR 220V,240V	220V,240V用
	#02....FOR 100V,200V	100V,200V用
	#03....FOR USE IN JAPAN	日本用

From the Library of Superior Sewing Machine & Supply LLC

14. BR CONTROL BOX CONPONENTS (FOR EUROPE)

BR電装関係（ヨーロッパ用）

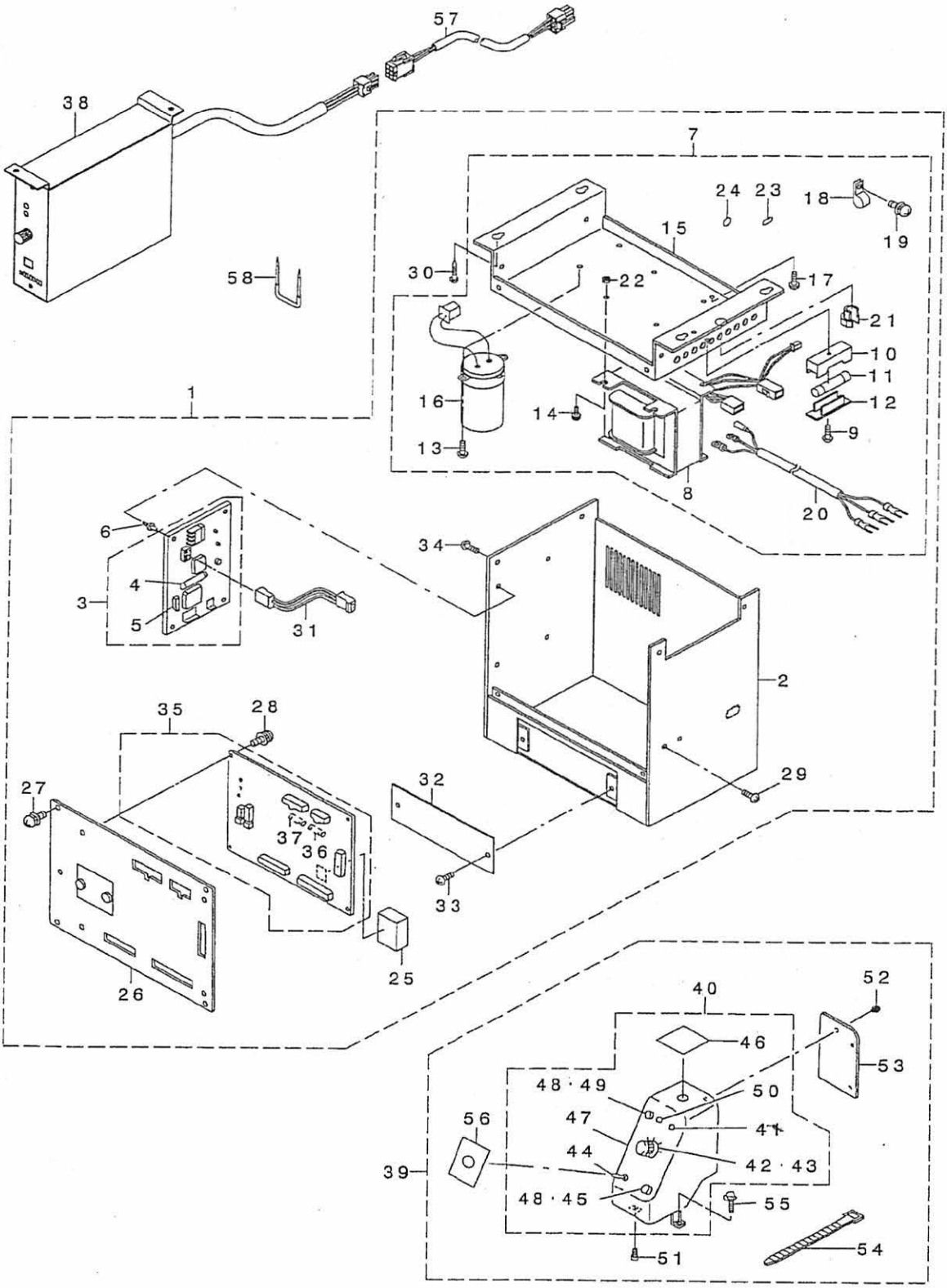

From the Library of Superior Sewing Machine & Supply LLC

REF. NO	NOTE	PART NO.	DESCRIPTION	ﾋﾞﾒｲ	Qty
1		400-14526	CONTROL BOX C ASM	ﾃﾞﾝｿｳﾎﾞｯｸｽCｸﾐ	1
2		GBR-107240AC	CONTROL BOX FRAME BODY C ASM.	ﾃﾞﾝｿｳﾎﾞｯｸｽﾌﾚｰﾑﾎﾝﾀｲC ｸﾐ	(1)
3		GBR-107610A0	POWER BOARD	ﾃﾞﾝｹﾞﾝｷﾊﾞﾝｸﾐ	(1)
4		E9613-601-000	FUSE 2A	ｶﾞﾗｽｶﾝ ﾋｭｰｽﾞ 2A	(1)
5		HA-0029800-00	BREAKER 5A	ﾌﾞﾚｰｶｰ 5A	(1)
6		HX-0022800-0A	SPACER	ｽﾍﾟｰｻ	(4)
7		GBR-107460AC	TRANS BASE C COMPLE.	ﾄﾗﾝｽﾍﾞｰｽC ｿｳｸﾐ	(1)
8		GBR-107480AC	TRANS C ASM.	ﾄﾗﾝｽCｸﾐ	(1)
9		SM-4041001-SC	SCREW M4X0.7 L=10	ﾅﾍﾞｺﾈｼﾞ M4X0.7 L=10	(1)
10		HF-0051110-00	FUSE HOLDER	ﾋｭｰｽﾞﾎﾙﾀﾞｰ	(1)
11		E9613-601-000	FUSE 2A	ｶﾞﾗｽｶﾝ ﾋｭｰｽﾞ 2A	(1)
12		HF-0051110-0B	FUSE HOLDER COVER	ﾋｭｰｽﾞﾎﾙﾀﾞｰｶﾊﾞｰ	(1)
13		SL-4030681-SC	SCREW M3 L=6	ｻﾞｶﾞﾈｼﾞｷ ﾅﾍﾞｺﾈｼﾞ M3 L=6	(2)
14		SL-4041291-SC	SCREW M4 L=12	ﾅﾍﾞｺﾈｼﾞ ｾﾚｽ M4 L=12	(4)
15		GBR-10747000	TRANSFORMER BASE	ﾄﾗﾝｽ ﾍﾞｰｽ	(1)
16		GBR-107430A0	CONDENSER ASM.	ｺﾝﾃﾞﾝｻｸﾐ	(1)
17		SL-4040891-SC	SCREW M4 L=8	ｻﾞｶﾞﾈｼﾞｷ ﾅﾍﾞｺﾈｼﾞ M4 L=8	(3)
18		HX-0015000-0B	CABLE CLIP	ｹｰﾌﾞﾙ ｸﾘｯﾌﾟ	(1)
19		SL-4030881-SC	SCREW M3X8	ﾅﾍﾞｺﾈｼﾞ ｾﾚｽ M3X0.5 L=8	(1)
20		GBR-107440A0	AC INPUT POWER CABLE CORD ASM.	AC ﾆｭｳﾘｮｸ ﾃﾞﾝｹﾞﾝｺｰﾄﾞｸﾐB	(1)
21		HX-0009800-00	CORD BUSH	ｺｰﾄﾞﾌﾞｯｼｭ	(1)
22		NM-6040001-SF	NUT M4	ﾛｯｶｸﾅｯﾄ M4X0.7 1ｼｭ	(4)
23		CM-2001000-01	PE MARK LABEL	PEﾏｰｸﾗﾍﾞﾙ	(1)
24		100-04109	GROUND MARK	ｸﾞﾗﾝﾄﾞﾏｰｸ	(1)
25		HL-0087301-43	IC	IC	(1)
26		GBR-207340A0	CONTROL BOX FRAME COVER ASM.	ﾃﾞﾝｿｳ ﾎﾞｯｸｽﾌﾚｰﾑ ﾌﾀｸﾐ	(1)
27		SL-4040891-SC	SCREW M4 L=8	ｻﾞｶﾞﾈｼﾞｷ ﾅﾍﾞｺﾈｼﾞ M4 L=8	(4)
28		SL-4030681-SC	SCREW M3 L=6	ｻﾞｶﾞﾈｼﾞｷ ﾅﾍﾞｺﾈｼﾞ M3 L=6	(4)
29		SL-4040891-SC	SCREW M4 L=8	ｻﾞｶﾞﾈｼﾞｷ ﾅﾍﾞｺﾈｼﾞ M4 L=8	(2)
30		SK-3452501-SE	SCREW D=4.5 L=25	ﾏﾙﾓｸﾈｼﾞ D=4.5 L=25	(4)
31		GBR-107720A0	CPU BOARD POWER CORD ASM.	CPUｷﾊﾞﾝﾃﾞﾝｹﾞﾝｺｰﾄﾞｸﾐ	(1)
32		GBR-10726000	BLIND PLATE	ﾒｸﾗｲﾀ	(1)
33		SM-5040601-SC	SCREW M4X0.7 L=6	ﾊﾞｲﾝﾄﾞｺﾈｼﾞ M4X0.7 L=6	(2)
34		SL-4040891-SC	SCREW M4 L=8	ｻﾞｶﾞﾈｼﾞｷ ﾅﾍﾞｺﾈｼﾞ M4 L=8	(4)
35		GBR-107510A0	CPU BOARD ASM.	CPUｷﾊﾞﾝｸﾐ	(1)
36		HF-0084020-P0	FUSE 2A	ﾋｭｰｽﾞ 2A	(1)
37		HF-0084063-P0	FUSE	ﾋｭｰｽﾞ	(1)
38		GBR-108010A0	P/F CONTROLLER ASM.	P/Fｺﾝﾄﾛｰﾗｿｳｸﾐ	1
39		400-16644	OPERATION PANEL WHOLE ASM. C	ｿｳｻﾊﾞﾈﾙｿｳｸﾐC	1
40		GBR-107850AC	PANEL C ASM.	ﾊﾟﾈﾙC ｸﾐ	(1)
41		HG-0029100-00	LAMP	ﾀﾞｲｵｰﾄﾞ	(1)
42		HA-0029000-00	DIP SWITCH	ﾃﾞｨｯﾌﾟｽｲｯﾁ	(1)
43		HX-0011400-0A	KNOB	ﾂﾏﾐ	(1)
44		MA0-14506000	SWITCH	ﾎﾞﾀﾝｱﾅｷﾘｶｴｽｲｯﾁ	(1)
45		HA-0019100-1C	SWITCH KNOB,BLACK	ｽｲｯﾁ ﾎﾞﾀﾝ(ｸﾛ)	(1)
46		GBR-10728000	BLANK STICKER B	ﾌﾞﾗﾝｸﾗﾍﾞﾙB	(1)
47		GBR-10786000	PANEL BOX	ﾊﾟﾈﾙﾎﾞｯｸｽ	(1)
48		HA-0019100-00	PUSH SWITCH 3 TERMINAL	ﾌﾟｯｼｭｽｲｯﾁ 3ﾀﾝｼ	(2)
49		HA-0019100-1B	OPERATION BUTTON	ｿｳｻﾌﾞﾎﾞﾀﾝ	(1)
50		HG-0029100-0A	LED (GREEN)	LED(ﾐﾄﾞﾘ)	(1)
51		SM-6040802-TN	SCREW	ﾛｯｶｸｱﾅﾎﾞﾙﾄ M4X0.7 L=8	(1)
52		SL-4030681-SC	SCREW M3 L=6	ｻﾞｶﾞﾈｼﾞｷ ﾅﾍﾞｺﾈｼﾞ M3 L=6	(3)
53		GBR-10782000	PANEL BOX BACK COVER	ﾊﾟﾈﾙﾎﾞｯｸｽｳﾗﾌﾞﾀ	(1)
54		EA-9500B01-00	CABLE BAND	ｿｸｾﾝﾊﾞﾝﾄﾞ	(1)
55		SL-4041091-SC	SCREW M4 L=10	ﾅﾍﾞｺﾈｼﾞ ｾﾚｽ M4X0.7 L=10	(1)
56		GBR-30788000	SHEEL	ﾓｰﾄﾞｷﾘｶｴﾗｰﾙ	(1)
57		GBR-250810A0	CABLE ASM.	P/Fｺﾝﾄﾛｰﾗﾁｭｳｹｲｹｰﾌﾞﾙｸﾐ	1
58		MA0-11532000	CORD STAPLE	ｺｰﾄﾞ ｽﾃｯﾌﾟﾙ	4

From the Library of Superior Sewing Machine & Supply LLC

15. BR POWER SUPPLY COMPONENTS

BR入出力関係

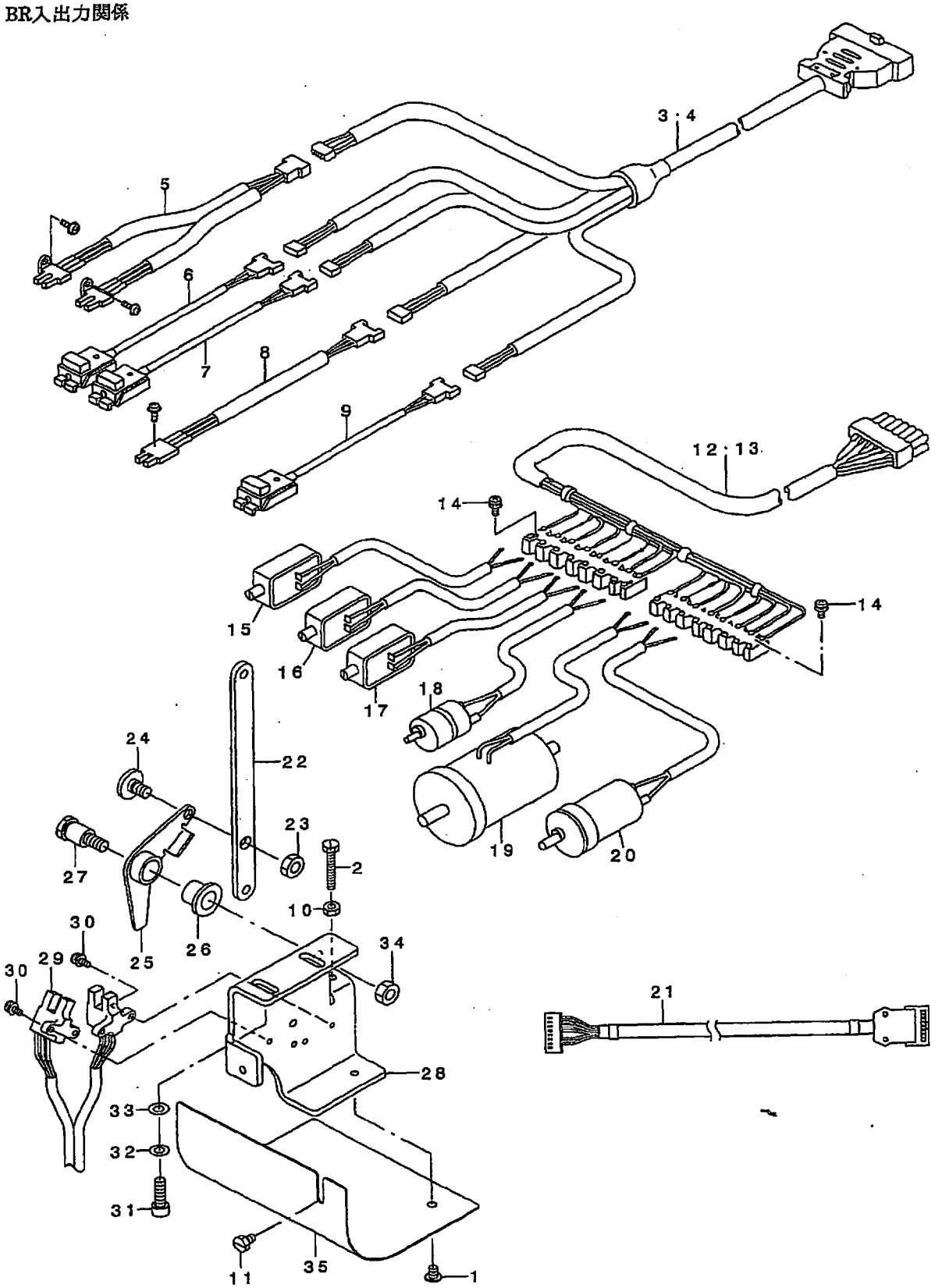

From the Library of Superior Sewing Machine & Supply LLC

REF. NO	NOTE	PART NO.	DESCRIPTION	ヒンメイ	Qty
1		SM-0040601-SC	SCREW M4X0.7 L=6	トラスコネジ M4X0.7 L=6	1
2		SM-9042510-SC	SCREW M4X0.7 L=25	ロッカクボルト M4X0.7 L=25	1
3	#01	GBR-108460A0	SENSOR CONNECTING CABLE ASM.	センサチュウケイケーブルクミ	1
4	#02	GBR-108460AC	SENSOR CONNECTING CABLE ASM.	センサチュウケイケーブルC クミ	1
5		GBR-108420A0	START SWITCH ASM.	スタートスイッチクミ	1
6		GBR-108430A0	RUB COMPLETION SWITCH ASM.	スリモミカンリョウスイッチクミ	1
7		GBR-108440A0	BUTTON SENSOR SWITCH ASM.	イチキメボタンケンチスイッチクミ	1
8		GBR-108470A0	TURNING ARM HOME POSITION SENS	センカイアームゲンテンセンサクミ	1
9		GBR-108450A0	INDEX STARTING SWITCH ASM.	インデックスケンテンスイッチクミ	1
10		NM-6040001-SC	NUT M4	ロッカクナット M4	1
11		SM-9040600-SP	HEAXGON BOLT	ロッカクボルト	1
12	#01	GBR-108580A0	STARTING MAGNET CABLE ASM.	シュッリョクチュウケイケーブルクミ	1
13	#02	GBR-108580AC	STARTING MAGNET CABLE ASM.	シュッリョクチュウケイケーブルC クミ	1
14		SL-4030881-SC	SCREW M3X8	ナベコネジ セムス M3X0.5 L=8	2
15		GBR-10852000	MAGNET	スリモミカコウマグネット	1
16		GBR-10853000	MAGNET	シャッターマグネット	1
17		GBR-10854000	MAGNET	イチキメマグネット	1
18		GBR-108550A0	DC MOTOR ASM.	スリモミDCモータクミ	1
19		GBR-108590A0	DC MOTOR ASM.	センカイアーADCモータークミ	1
20		GBR-108560A0	DC MOTOR ASM.	インデックスDCモータクミ	1
21		400-12037	LKA-BR RELAY CABLE ASM	LKA-BRチュウケイケーブルクミ	1
22		400-14219	SWITCH LINK	スイッチリンク	1
23		NS-6150430-SP	NUT 15/64-28	ロッカクナット 15/64-28	1
24		SD-0700332-SP	HINGE SCREW D= 7 H= 3.5	ダンネジ D=7 H=3.5	1
25		182-19907	TWO-STEP SWITCH LEVER	ニダンスイッチレバー	1
26		165-83403	METAL	カンユメタル	1
27		165-82504	SCREW	ニダンスイッチネジ	1
28		165-82603	SWITCH BRACKET	ニダンスイッチブラケット	1
29		GBR-108420A0	START SWITCH ASM.	スタートスイッチクミ	1
30		SL-4030881-SC	SCREW M3X8	ナベコネジ セムス M3X0.5 L=8	4
31		SM-6051602-TP	SCREW M5X0.8 L=16	ロッカクアナボルト M5X0.8 L=16	2
32		WS-0510002-KN	SPRING WASHER	バネガネ 5.1X9.2X1.3	2
33		WP-0531000-SC	WASHER 5.3X10X1	ヒラガネ 5.3X10X1	2
34		NM-6060001-SC	NUT M6	ロッカクナット M6 1シュ	1
35		165-82702	SWITCH COVER	ニダンスイッチカバー	1

NOTE (注記)

#01....FOR USE IN JAPAN AND GENERAL EXPORT — 日本・一般輸出用

#02....FOR EUROPE — ヨーロッパ用

From the Library of Superior Sewing Machine & Supply LLC

16. CONTROL BOX COMPONENTS

電装ボックス関係

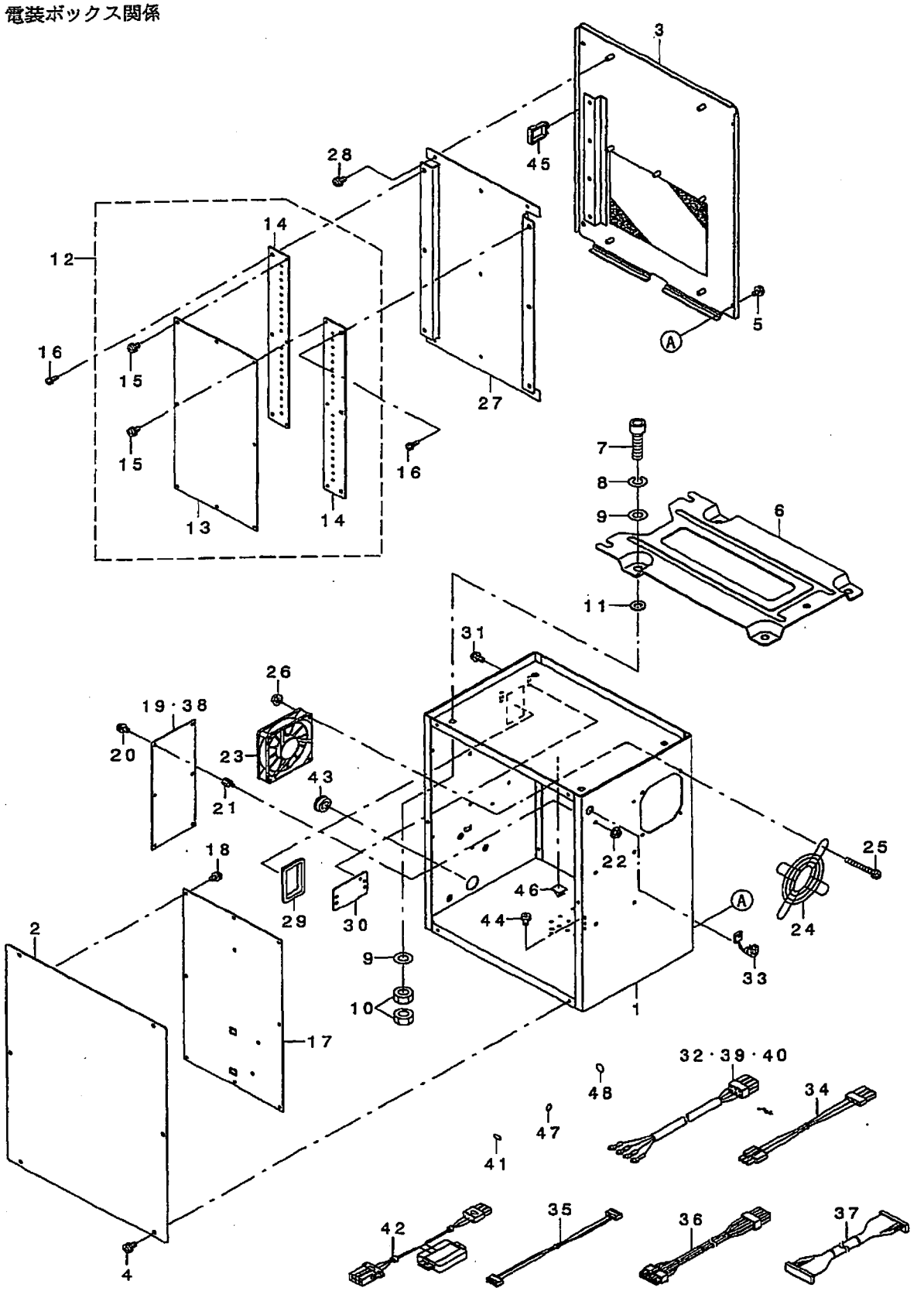

From the Library of Superior Sewing Machine & Supply LLC

REF. NO	NOTE	PART NO.	DESCRIPTION	ヒンメイ	Qty
1		400-03451	CONTROL BOX	ﾃﾞﾝｿｳﾎﾞｯｸｽ	1
2		400-03452	CONTROL BOX FRONT COVER	ﾃﾞﾝｿｳﾎﾞｯｸｽﾏｴｶﾊﾞｰ	1
3		400-03453	CONTROL BOX REAR COVER	ﾃﾞﾝｿｳﾎﾞｯｸｽｳｼﾛｶﾊﾞｰ	1
4		SL-4040891-SC	SCREW M4 L=8	ｻﾞｶﾞﾈｼﾞｷ ﾅﾍﾞｺﾈｼﾞ M4 L=8	6
5		SL-4040891-SC	SCREW M4 L=8	ｻﾞｶﾞﾈｼﾞｷ ﾅﾍﾞｺﾈｼﾞ M4 L=8	4
6		M3801-476-000	TRANSMISSION BOX FITTING PLATE	ﾃﾞﾝｿｳﾎﾞｯｸｽﾄﾘﾂｹｲﾀ	1
7		SM-6083002-TN	SCREW M8 L=30	ﾛｯｶｸｱﾅﾎﾞﾙﾄ M8 L=30	4
8		WS-0820002-KR	SPRING WASHER, M8	ﾊﾞﾈｻﾞｶﾞﾈ 8.2X15.4X2	4
9		WP-0841601-SC	WASHER 8.4X17.4X1.6	ﾋﾗｻﾞｶﾞﾈ ﾐｶﾞｷﾏﾙ M8	8
10		NM-6080001-SC	NUT M8X1.25	ﾛｯｶｸﾅｯﾄ M8 1ｼｭ	8
11		M4206-461-000	WASHER	ｺﾞﾑﾂｷｻﾞｶﾞﾈ	4
12		400-05648	MAIN PCB ASS'Y	MAINｷﾊﾞﾝｸﾐ	1
13		400-05641	MAIN PCB	MAINｷﾊﾞﾝ	(1)
14		400-05705	MAIN PCB HEAT SINK	MAINﾎｳﾈﾂｲﾀ	(2)
15		SL-4031081-SF	SCREW M3 L=10	ﾅﾍﾞｺﾈｼﾞ ｾﾑｽ M3 L=10	(6)
16		SL-4040891-SC	SCREW M4 L=8	ｻﾞｶﾞﾈｼﾞｷ ﾅﾍﾞｺﾈｼﾞ M4 L=8	6
17		400-00029	SDC PCB A ASS'Y	SDCｷﾊﾞﾝｸﾐ	1
18		SL-4040881-SC	SCREW M4 L=8	ｻﾞｶﾞﾈｼﾞｷ ﾅﾍﾞｺﾈｼﾞ M4 L=8	10
19	#01	400-00056	FLT-T PCB A ASS'Y	FLT-Tｷﾊﾞﾝｸﾐ	1
20		SL-4040881-SC	SCREW M4 L=8	ｻﾞｶﾞﾈｼﾞｷ ﾅﾍﾞｺﾈｼﾞ M4 L=8	6
21		HX-0033900-00	STUD	ｷﾊﾞﾝﾊﾞｰﾂ	6
22		NM-3040520-SC	NUT M4	ﾌﾗﾝｼﾞﾂｷﾅｯﾄ M4	6
23		400-05401	FAN MOTOR ASS'Y	ﾌｧﾝﾓｰﾀｸﾐ	1
24		HM-0004800-10	FINGER GUARD	ﾌｨﾝｶﾞｰｶﾞｰﾄﾞ	1
25		SL-4043591-SC	SCREW	ｻﾞｶﾞﾈｼﾞｷﾅﾍﾞｺﾈｼﾞ	4
26		NM-3040520-SC	NUT M4	ﾌﾗﾝｼﾞﾂｷﾅｯﾄ M4	4
27		400-05706	MAIN PCB HOLDER PLATE	MAINｷﾊﾞﾝﾄﾒｲﾀ	1
28		SL-4040881-SC	SCREW M4 L=8	ｻﾞｶﾞﾈｼﾞｷ ﾅﾍﾞｺﾈｼﾞ M4 L=8	5
29		HX-0040700-00	BUSH	ﾌﾞｯｼｭ	1
30		178-45009	CORD FITTING PLATE	ｺｰﾄﾞﾄﾒｲﾀ	1
31		SL-4041091-SC	SCREW M4 L=10	ﾅﾍﾞｺﾈｼﾞ ｾﾑｽ M4X0.7 L=10	2
32	#01	400-05391	POWER CORD 3P ASS'Y	ﾃﾞﾝｹﾞﾝｺｰﾄﾞ3Pｸﾐ	1
33		HX-0041000-0A	STRAIN RELIEF BUSHING	ｽﾄﾚｰﾝﾘﾘｰﾌﾌﾞｯｼﾝｸﾞ	1
34	#03	400-05393	FLT-SDC CORD P ASS'Y	FLT-SDCｺｰﾄﾞPｸﾐ	1
35		400-05394	FLT-SDC CORD S ASS'Y	FLT-SDCｺｰﾄﾞSｸﾐ	1
36		400-05726	SDC-MAIN CORD P ASS'Y	SDC-MAINｺｰﾄﾞPｸﾐ	1
37		400-05727	SDC-MAIN CORD S ASS'Y	SDC-MAINｺｰﾄﾞSｸﾐ	1
38	#02	400-00046	FLT-S PCB A ASS'Y	FLT-S ｷﾊﾞﾝAｸﾐ	1
39	#04	400-05388	POWER CORD 1P220V ASS'Y	ﾃﾞﾝｿｳﾃﾞﾝｹﾞﾝｺｰﾄﾞｸﾐ	1
40	#05	400-05392	POWER CORD 1P ASS'Y	ﾃﾞﾝｿｳﾃﾞﾝｹﾞﾝｺｰﾄﾞｸﾐ	1
41	#05	CM-2001000-01	PE MARK LABEL	PEﾏｰｸﾗﾍﾞﾙ	1
42	#05	400-12038	REACTOR CORD ASSY	ﾘｱｸﾀｺｰﾄﾞｸﾐ	1
43		HX-0032600-0K	CABLE PARTS	ｿｸｾﾝﾊﾞｰﾂ	1
44		SL-4040891-SC	SCREW M4 L=8	ｻﾞｶﾞﾈｼﾞｷ ﾅﾍﾞｺﾈｼﾞ M4 L=8	2
45		HX-0051100-00	WIRE SADDLE	ﾜｲﾔｻﾄﾞﾙ	3
46		E9607-603-000	STICKER (SMALL)	ｽﾃﾞｶｰ (ｼｮｰ)	1
47		E9567-319-000	EARTH MARK	ｱｰｽ ﾏｰｸ	1
48		400-03458	MASK SEAL	ﾏｽｸﾗﾍﾞﾙ	14

NOTE (注記)	#01....FOR 100V(1-PHASE)	100V(単相)
	200/220V(3-PHASE)	200/220V(3相)用
	#02....FOR 220/240V(1-PHASE),CE	220/240V(単相),CE用
	#03....FOR 100V(1-PHASE),	100V(単相),
	200/220V(3-PHASE),	200/220V(3相),
	220/240V(1-PHASE)	220/240V(単相)用
	#04....FOR 220/240V(1-PHASE)	220/240V(単相)用
	#05....FOR CE	CE用

From the Library of Superior Sewing Machine & Supply LLC

17. OPERATION PANEL COMPONENTS
操作パネル関係

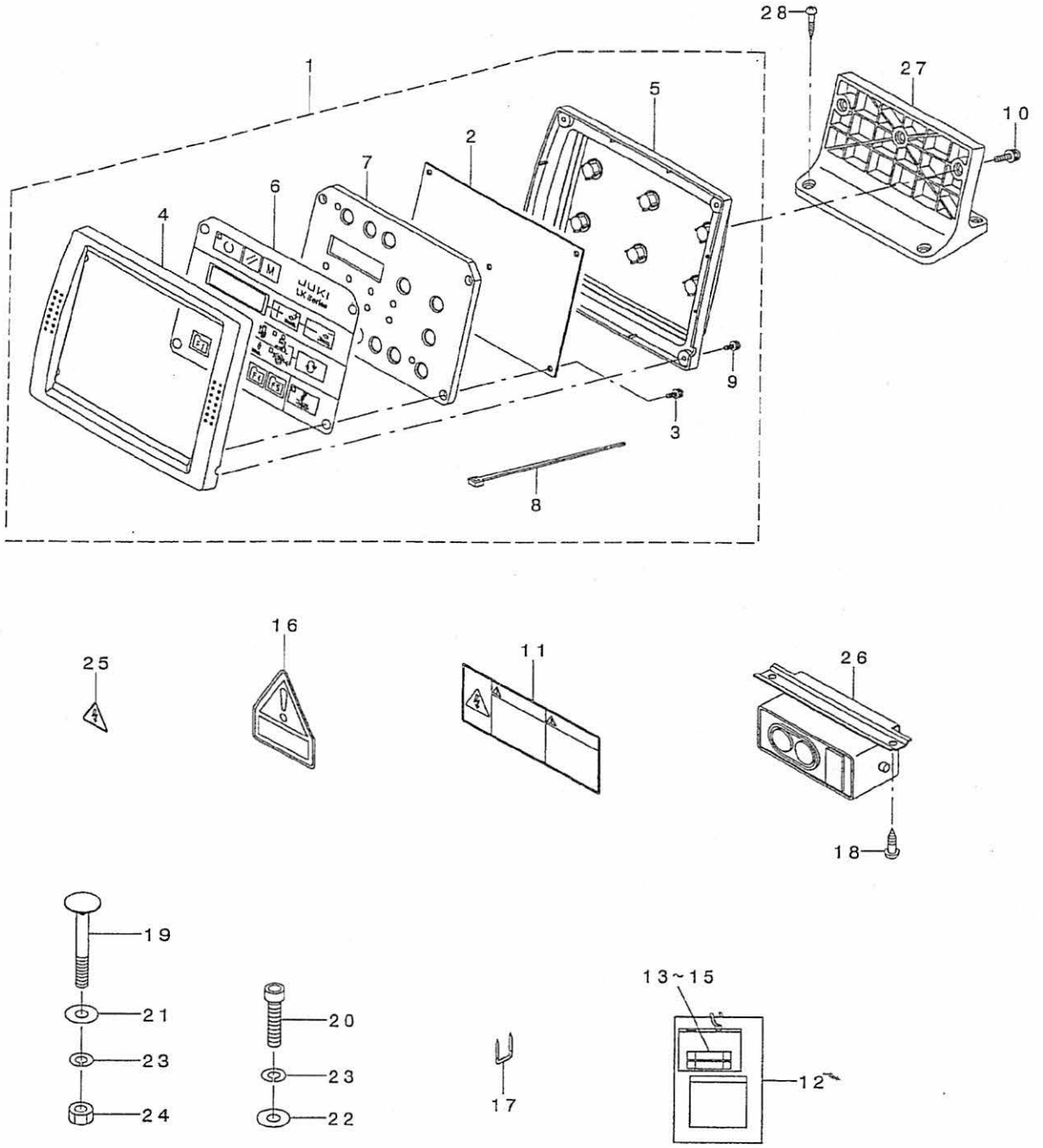

From the Library of Superior Sewing Machine & Supply LLC

REF. NO	NOTE	PART NO.	DESCRIPTION	ヒョウメイ	Qty
1		400-05695	OPERATION BOX A ASM.	ｿｳｻﾎﾞｯｸｽAｸﾞﾐ	1
2		400-05677	PANEL PCB ASS'Y	ﾊﾟﾈﾙｷﾊﾞﾝｸﾐ	(1)
3		SL-4031081-SC	SCREW M3 X 10	ﾅﾍﾞﾈｼﾞ ｾﾙｽ M3 L=10	(4)
4		400-05692	OPERATION BOX FRONT CASE	ｿｳｻﾎﾞｯｸｽﾏｴｹｰｽ	(1)
5		400-05693	OPERATION BOX REAR CASE	ｿｳｻﾎﾞｯｸｽｳｼﾛｹｰｽ	(1)
6		400-05691	OPERATION PANEL SHEET	ﾊﾟﾈﾙｼｰﾄ	(1)
7		400-05694	PANEL PCB HOLDER PLATE	ｿｳｻｷﾊﾞﾝﾄﾒｲﾀ	(1)
8		EA-9500B01-00	CABLE BAND	ｿｸｾﾝﾊﾞﾝﾄﾞ	(1)
9		SL-4031081-SC	SCREW M3 X 10	ﾅﾍﾞﾈｼﾞ ｾﾙｽ M3 L=10	(4)
10		SL-4041691-SC	SCREW M4 L=16	ﾅﾍﾞｺﾈｼﾞ ｾﾙｽ M4X0.7 L=16	3
11	#03	CM-3001004-01	LABEL 3 (LARGE)	ﾃﾞﾝｹﾞｷｷｹﾝﾗﾍﾞﾙ3(ﾀﾞｲ)	1
12		M3004-511-00A	VOLTAGE INDICATION CARD,A	ﾃﾞﾝｱﾂ ﾋｮｳｼﾞﾌﾀﾞA	1
13		HF-0013031-5S	FUSE 3.15A 250V REF. NO.112	ﾋｭｰｽﾞ (3.15A)	1
14		HF-0030002-00	FUSE 2A (220/240V)	ｿｸﾀﾞﾝ ﾋｭｰｽﾞ	1
15		HF-0013050-P0	FUSE 5A	ﾋｭｰｽﾞ 5A	1
16	#01	CM-3004006-01	VOLTAGE CAUTION LABEL	ﾃﾞﾝｱﾂﾁｭｳｲｼｰﾙ	1
17		MA0-11532000	CORD STAPLE	ｺｰﾄﾞ ｽﾃｰﾌﾟﾙ	3
18		SK-3512001-SE	WOOD SCREW D=5.1 L=20	ﾏﾙﾓｸﾈｼﾞ D=5.1 L=20	2
19		MTS-HJ100003	BOLT	ﾓｰﾀ ﾄﾘﾂｹﾎﾞﾙﾄ	2
20		SM-6084002-TN	SCREW M8 L=40	ﾛﾂｶｸｱﾅﾎﾞﾙﾄ M8 L=40	1
21		WP-0852086-SC	WASHER M8	ﾋﾗｶﾞｶﾞﾈ	2
22		WP-0841601-SC	WASHER 8.4X17.4X1.6	ﾋﾗｶﾞｶﾞﾈ ﾐｶﾞｷﾏﾙ M8	1
23		WS-0820002-KR	SPRING WASHER, M8	ﾊﾞﾈｶﾞｶﾞﾈ 8.2X15.4X2	3
24		NM-6080002-SC	NUT M8	ﾛﾂｶｸﾅｯﾄ M8 2ｼｭ	2
25	#01	CM-3001000-03	VOLTAGE WARNING LABEL(25)	ｷｹﾝﾃﾞﾝｱﾂｹｲｺｸｼｰﾙ(25)	1
26	#02	HA-0042500-00	SWITCH	ｽｲｯﾁ	1
27		400-05697	OPERATION BOX FITTING PLATE	ｿｳｻﾊﾞｺﾄﾘﾂｹｲﾀ	1
28		SK-3382001-SE	SCREW D=3.8 L=20	ﾏﾙﾓｸﾈｼﾞ D=3.8 L=20	4

NOTE (注記)		
	#01....FOR 220/240V(1-PHASE),CE	220/240V(単相),CE用
	#02....FOR 100V(1-PHASE),	100V(単相),
	200/220V(3-PHASE),	200/220V(3相)
	220/240V(1-PHASE)	220/240V(単相)用
	#03....FOR 100V(1-PHASE),	100V(単相),
	200/220V(3-PHASE)	200/220V(3相)用

From the Library of Superior Sewing Machine & Supply LLC

18. MC−597 WIRING DIAGRAM

MC−597電装配線図

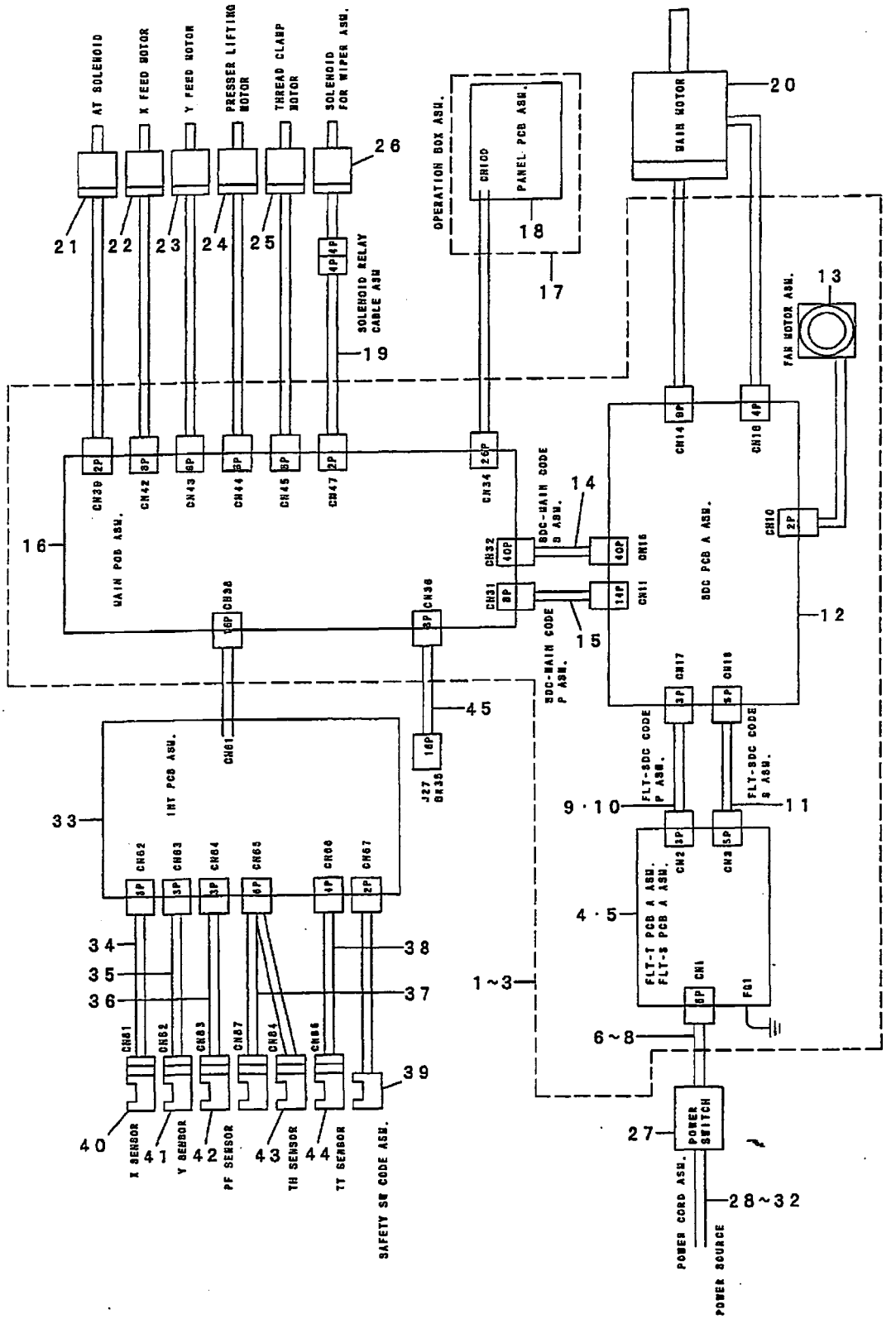

From the Library of Superior Sewing Machine & Supply LLC

REF. NO	NOTE	PART NO.	DESCRIPTION	ﾄﾞｲﾂｺﾞ	Qty
1	#07	400-13068	CONTROL_BOX_A_ASSY	ﾃﾞﾝｿｳﾎﾞｯｸｽAｸﾐ	1
2	#04	400-13099	CONTROL_BOX_B_ASSY	ﾃﾞﾝｿｳﾎﾞｯｸｽBｸﾐ	1
3	#03	400-13144	CONTROL_BOX_C_ASSY	ﾃﾞﾝｿｳﾎﾞｯｸｽCｸﾐ	1
4	#01	400-00056	FLT-T PCB A ASS'Y	FLT-T PCB A ｸﾐ	(1)
5	#05	400-00046	FLT-S PCB A ASS'Y	FLT-S PCB A ｸﾐ	(1)
6	#07	400-05391	POWER CORD 3P ASS'Y	POWER ｺｰﾄﾞ 3P ｸﾐ	(1)
7	#04	400-05392	POWER CORD 1P ASS'Y	POWER ｺｰﾄﾞ 1P ｸﾐ	(1)
8	#03	400-05388	POWER CORD 1P220V ASS'Y	POWER ｺｰﾄﾞ 1P220V ｸﾐ	(1)
9	#06	400-05393	FLT-SDC CORD P ASS'Y	FLT-SDC ｺｰﾄﾞ Pｸﾐ	(1)
10	#04	400-12038	REACTOR CORD ASSY	ﾘｱｸﾀｺｰﾄﾞｸﾐ	(1)
11		400-05394	FLT-SDC CORD S ASS'Y	FLT-SDC ｺｰﾄﾞ Sｸﾐ	(1)
12		400-00029	SDC PCB A ASS'Y	SDC PCB A ｸﾐ	(1)
13		400-05401	FAN MOTOR ASS'Y	FANﾓｰﾀｸﾐ	(1)
14		400-05727	SDC-MAIN CORD S ASSY	SDC-MAINｺｰﾄﾞ Sｸﾐ	(1)
15		400-05726	SDC-MAIN CORD P ASSY	SDC-MAINｺｰﾄﾞ Pｸﾐ	(1)
16		400-05648	MAIN PCB ASSY	ﾒｲﾝPCBｸﾐ	(1)
17		400-05695	OPERATION BOX A ASM.	ｿｳｻﾎﾞｯｸｽAｸﾞﾐ	1
18		400-05677	PANEL PCB ASSY	ﾊﾟﾈﾙPCBｸﾐ	(1)
19		400-18355	SOLENOID RELAY CABLE ASM.	ｿﾚﾉｲﾄﾞﾁｭｳｹｲｺｰﾄﾞｸﾐ	1
20		400-03470	AC SERVO MOTOR	ACｻｰﾎﾞﾓｰﾀ	1
21		400-06628	AT_SOLENOID	ATｿﾚﾉｲﾄﾞ	1
22		400-06861	X FEED MOTOR	ﾖｺｵｸﾘｽﾃｯﾋﾟﾝｸﾞﾓｰﾀ	1
23		400-06862	Y FEED MOTOR	ﾀﾃｵｸﾘｽﾃｯﾋﾟﾝｸﾞﾓｰﾀ	1
24		400-06863	PRESSER LIFTING MOTOR	ｵｻｴｽﾃｯﾋﾟﾝｸﾞﾓｰﾀ	1
25		400-06864	THREAD CLAMP MOTOR	ｲﾄｻﾞﾐｽﾃｯﾋﾟﾝｸﾞﾓｰﾀ	1
26		141-47755	SOLENOID FOR WIPER ASM.	ﾜｲﾊﾟｰｿﾚﾉｲﾄﾞｸﾐ	1
27	#06	HA-0042500-00	SWITCH	ｽｲｯﾁ	1
28	#02	M9017-580-0A0	POWER CABLE ASM.	ﾃﾞﾝｹﾞﾝｹｰﾌﾞﾙｸﾐ	1
29	#01	M9035-580-0A0	POWER SOURCE CORD ASM.	100Vﾖｳﾃﾞﾝｹﾞﾝｺｰﾄﾞｸﾐ	1
30	#01	M9034-580-0A0	GROUND CORD ASM.	100Vﾖｳｱｰｽｺｰﾄﾞｸﾐ	1
31	#04	400-05390	POWER CABLE JE ASM.	ﾃﾞﾝｹﾞﾝｹｰﾌﾞﾙJEｸﾐ	1
32	#03	M9024-580-0A0	POWER CABLE ASM.	ﾃﾞﾝｹﾞﾝｹｰﾌﾞﾙｸﾐ	1
33		400-05664	INT PCB ASM.	INTｷﾊﾞﾝｸﾐ	1
34		400-05730	X SENSOR CABLE ASM.	Xｾﾝｻｰｹｰﾌﾞﾙｸﾐ	1
35		400-05731	Y SENSOR CABLE ASM.	Yｾﾝｻｰｹｰﾌﾞﾙｸﾐ	1
36		400-05732	PF SENSOR CABLE ASM.	PFｾﾝｻｰｹｰﾌﾞﾙｸﾐ	1
37		400-05729	TH SENSOR CABLE ASM.	THｾﾝｻｰｹｰﾌﾞﾙｸﾐ	1
38		400-05733	TT SENSOR CABLE ASM.	TTｾﾝｻｰｹｰﾌﾞﾙｸﾐ	1
39		400-05734	SAFETY SW CABLE ASM.	ｾﾝｻｰｽｲｯﾁｹｰﾌﾞﾙｸﾐ	1
40		HD-0022300-00	PHOTO SENSOR	ﾌｫﾄｲﾝﾀﾗﾌﾞﾀ	1
41		HD-0005700-0A	PHOTO SENSOR	ﾌｫﾄｾﾝｻ	1
42		HD-0005700-0A	PHOTO SENSOR	ﾌｫﾄｾﾝｻ	1
43		HD-0005700-0A	PHOTO SENSOR	ﾌｫﾄｾﾝｻ	2
44		HD-0022300-00	PHOTO SENSOR	ﾌｫﾄｲﾝﾀﾗﾌﾞﾀ	1
45		400-12037	LKA-BR RELAY CABLE ASM	LKA-BRﾁｭｳｹｲｹｰﾌﾞﾙｸﾐ	1

NOTE (注記)		
	#01....FOR 100V(1-PHASE)	100V(単相)用
	#02....FOR 200/220V(3-PHASE)	200/220V(3相)用
	#03....FOR 220/240V(1-PHASE)	220/240V(単相)用
	#04....FOR CE	CE用
	#05....FOR 220/240V(1-PHASE),CE	220/240V(単相),CE用
	#06....EXCEPT CE	CEを除く
	#07....FOR 100V(1-PHASE), 200/220V(3-PHASE)	100V(単相) 200/220V(3相)用

From the Library of Superior Sewing Machine & Supply LLC

19. BR35 WIRING DIAGRAM
BR35電装配線図

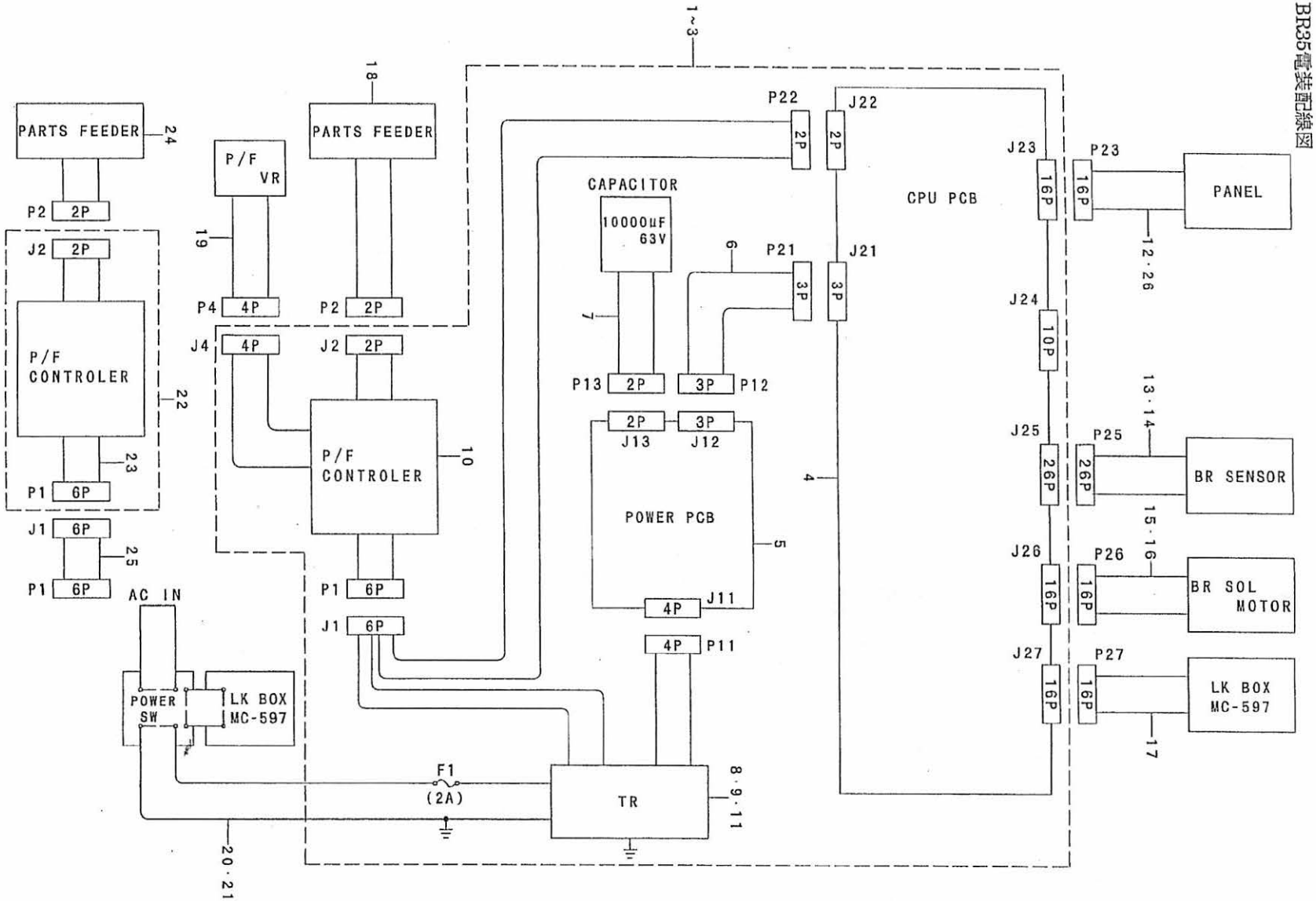

From the Library of Superior Sewing Machine & Supply LLC

REF. NO	NOTE	PART NO.	DESCRIPTION	ヒンメイ	Qty
1	#01	400-14495	CONTROL BOX A ASM	ﾃﾞﾝｿｳﾎﾞｯｸｽAｸﾐ	1
2	#02	400-14506	CONTROL BOX B ASM	ﾃﾞﾝｿｳﾎﾞｯｸｽBｸﾐ	1
3	#03	400-14526	CONTROL BOX C ASM	ﾃﾞﾝｿｳﾎﾞｯｸｽCｸﾐ	1
4		GBR-107510A0	CPU BOARD ASM.	CPUｷﾊﾞﾝｸﾐ	(1)
5		GBR-107610A0	POWER BOARD	ﾃﾞﾝｹﾞﾝｷﾊﾞﾝｸﾐ	(1)
6		GBR-107720A0	CPU BOARD POWER CORD ASM.	CPUｷﾊﾞﾝﾃﾞﾝｹﾞﾝｺｰﾄﾞｸﾐ	(1)
7		GBR-107430A0	CONDENSER ASM.	ｺﾝﾃﾞﾝｻｸﾐ	(1)
8	#01	GBR-107480AA	TRANS A ASM.	ﾄﾗﾝｽ Aｸﾐ	(1)
9	#02	GBR-107480AB	TRANS B ASM.	ﾄﾗﾝｽ Bｸﾐ	(1)
10	#04	GBR-107740A0	P/F CONTROLLER ASM.	P/F ｺﾝﾄﾛｰﾗ ｸﾐ	(1)
11	#03	GBR-107480AC	TRANS C ASM.	ﾄﾗﾝｽCｸﾐ	(1)
12	#04	GBR-30784AA0	OPERATION PANEL WHOLE ASM. (A)	ｿｳｻﾊﾞﾈﾙｿｳｸﾐ(A)	1
13	#03	GBR-108410BC	SENSOR CONNECTING CABLE ASM.	BRｾﾝｻC ｿｳｸﾐ	1
14	#04	GBR-108410B0	BR SENSOR ASM.	BRｾﾝｻｰｿｳｸﾐ	1
15	#03	GBR-108510AC	BR DRIVING SOURCE ASM.	BRｸﾄﾞｳｹﾞﾝC ｿｳｸﾐ	1
16	#04	GBR-108510A0	BR DRIVING SOURCE ASM.	BRｸﾄﾞｳｹﾞﾝｿｳｸﾐ	1
17		400-12037	LKA-BR RELAY CABLE ASM.	LKA-BRﾁｭｳｹｲｹｰﾌﾞﾙｸﾐ	1
18	#04	GBR-107910A0	PARTS FEEDER ALL ASM.	ﾊﾟｰﾂﾌｨｰﾀﾞｰｸﾐ	1
19	#04	GBR-107870A0	VOLUME ASM.	ﾎﾞﾘｭｰﾑ ｸﾐ	1
20	#05	GBR-107440A0	AC INPUT POWER CABLE CORD ASM.	AC ﾆｭｳﾘｮｸ ﾃﾞﾝｹﾞﾝｺｰﾄﾞｸﾐB	1
21	#01	GBR-107450A0	AC INPUT POWER CABLE CORD ASM.	AC ﾆｭｳﾘｮｸ ﾃﾞﾝｹﾞﾝｺｰﾄﾞｸﾐ	1
22	#03	GBR-108010A0	P/F CONTROLLER ASM.	P/Fｺﾝﾄﾛｰﾗｿｳｸﾐ	1
23	#03	GBR-108210A0	P/F POWER CORD ASM.	P/Fﾃﾞﾝｹﾞﾝｺｰﾄﾞｸﾐ	(1)
24	#03	GBR-107910AC	PARTS FEEDR ALL C ASM.	ﾊﾟｰﾂﾌｨｰﾀﾞC ｸﾐ	1
25	#03	GBR-250810A0	P/F CONTROLLER RELAY CABLE ASM	P/Fｺﾝﾄﾛｰﾗﾁｭｳｹｲｹｰﾌﾞﾙｸﾐ	1
26	#03	GBR-250610AC	OPERATION PANEL WHOLE ASM. C	ｿｳｻﾊﾞﾈﾙｿｳｸﾐ (C)	1

NOTE (注記)	#01....FOR 100～200V	100～200用
	#02....FOR 220～240V	220～240用
	#03....FOR CE	CE用
	#04....EXCEPT CE	CEを除く
	#05....FOR 220～240V,CE	220～240V,CE用

From the Library of Superior Sewing Machine & Supply LLC

20. ACCESSORIE PART COMPONENTS

付属品関係

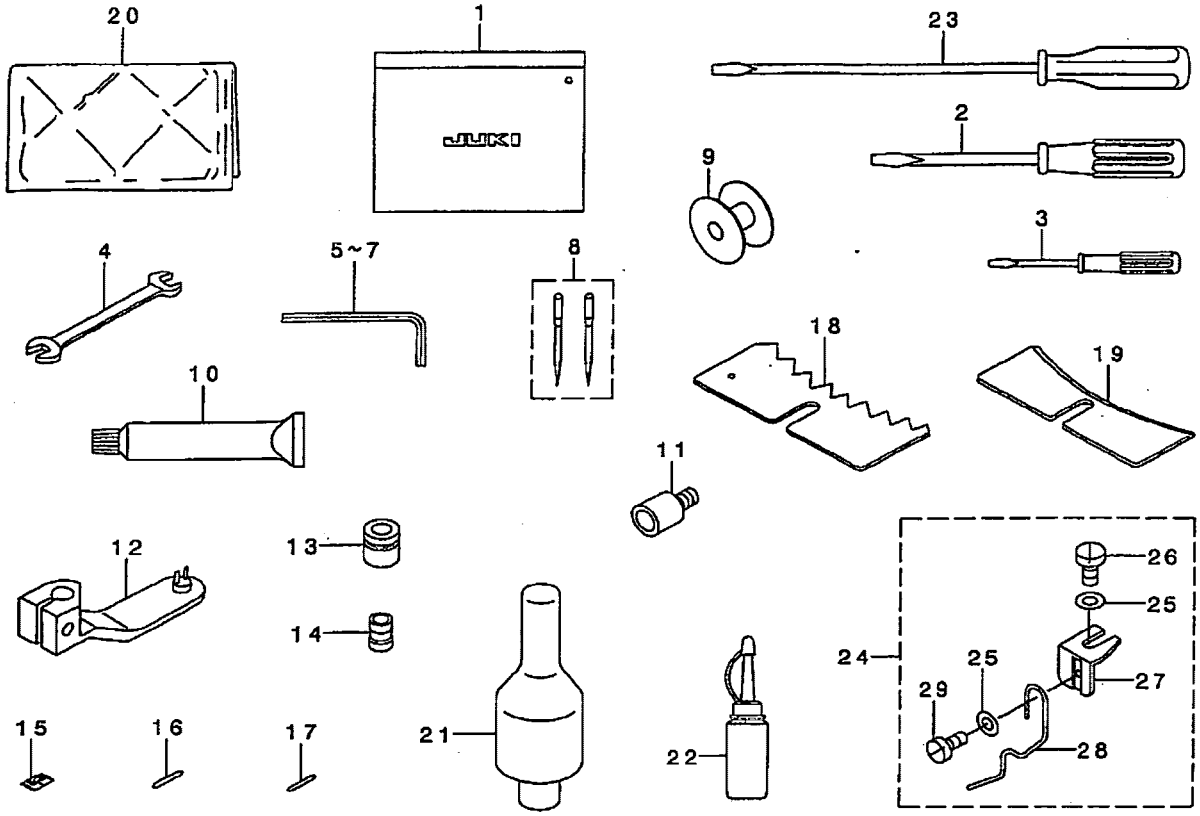

REF. NO	NOTE	PART NO.	DESCRIPTION	ﾋﾝﾒｲ	Qty
1		229-32800	ACCESSORIE BAG	ﾌｿﾞｸﾋﾝﾊﾞｯｸﾞ	1
2		229-33105	SCREW DRIVER,MIDDLE	ﾄﾞﾗｲﾊﾞｰ(ﾁｭｳ)	1
3		229-33204	SCREW DRIVER,SMALL	ﾄﾞﾗｲﾊﾞｰ(ｼｮｳ)	1
4		B9113-012-000	WRENCH (9X10)	ﾘｮｰｸﾞﾁ ｽﾊﾟﾅ(ｼｮｰ)	1
5		B9140-372-000	HEXAGONAL WRENCH, SMALL	ﾛｯｶｸﾎﾞｰ ｽﾊﾟﾅ (ｼｮｰ)	1
6		B9141-372-000	HEXAGONAL WRENCH, LARGE	ﾛｯｶｸﾎﾞｰ ｽﾊﾟﾅ (ﾀﾞｲ)	1
7		GCT-02906000	HEXAGONAL SPANNER	6ｶｸﾎﾞｰ ｽﾊﾟﾅ	1
8		MDP-170B1402	NEEDLE DPX17#14-2	DPX17#14-2	1
9		138-12102	BOBBIN	ﾎﾞﾋﾞﾝ	1
10		400-13640	JUKI GREASE B TUBE	ｼﾞｭｰｷｸﾞﾘｰｽB	1
11		400-13451	GREASE JOINT	ｸﾞﾘｽﾁｭｳﾆｭｳﾂｷﾞﾃ	1
12		165-58009	BUTTON CARRIER B	ﾎﾞﾀﾝｷｬﾘｱB	1
13		165-58108	RING, SMALL	ｼﾝﾀﾞﾗﾘﾝｸﾞ ｼｮｳ	1
14		182-00501	WORK ATTACHMENT (SMALL)	ﾜｰｸｱﾀｯﾁﾒﾝﾄ(ｼｮｳ)	3
15		182-04701	SCALE	ﾒﾓﾘ(ﾋﾀﾞﾘ)	4
16		GBR-01155000	SET PIN A	ｾｯﾄﾋﾟﾝ A	6
17		GBR-01156000	SET PIN B	ｾｯﾄﾋﾟﾝ B	4
18		GBR-01423000	SELECTOR PLATE, MEDIUM	ｾﾝﾍﾞﾂｲﾀ ﾁｭｰ	1
19		GBR-01437000	AUXILIARY PLATE	ｾﾝﾍﾞﾂﾎｼﾞｮｳﾀ	1
20		262-34005	VINYL COVER	ﾄｳﾌﾞﾋﾞﾆｰﾙｶﾊﾞｰ	1
21		141-01208	HEAD SUPPORT BAR	ﾄｳﾌﾞﾂﾅｷｴﾎﾞｳ	1
22		B9121-220-0A0	OILER (CONTAINING NO.2 OIL)	ｱﾌﾞﾗﾂﾎﾞ NO2ｲﾘ	1
23		229-33006	SCREW DRIVER,LARGE	ﾄﾞﾗｲﾊﾞｰ(ﾀﾞｲ)	1
24		141-46757	BUTTON RISING BAR ASM.	ﾎﾞﾀﾝｳｶﾝﾎﾞｳｸﾐ	1
25		WP-0370316-SD	WASHER 3.7X8X0.3	ﾋﾗﾜｯｶﾞﾈ 3.7X8X0.3	(2)
26		SS-9090813-TP	SCREW 9/64-40 L=8	ﾛｯｶｸﾎﾞﾙﾄ 9/64-40 L=8	(1)
27		141-46807	INSTALLING BASE	ｳｶﾝﾎﾞｳﾄﾘﾂｹｲﾀ	(1)
28		141-46708	BUTTON RISING BAR	ﾎﾞﾀﾝｳｶﾝﾎﾞｳ	(1)
29		SS-6080340-SP	SCREW 1/8-44 L=2.9	ﾋﾗﾈｼﾞ 1/8-44 L=2.9	(1)

From the Library of Superior Sewing Machine & Supply LLC

NUMERICAL INDEX OF PARTS 索引

PART NO 品番	PAGE 頁	REF NO
B1114-581-000	2	3
B1426-771-000	14	10
B1649-161-000	12	64
B1853-512-00E	6	19
B1903-552-000	6	13
B1908-505-000	6	4
B2102-205-00A	2	11
B2107-816-000	18	56
B2107-816-000-A	16	8
B2414-280-0A0	6	37
B2415-280-0A0	6	36
B2416-280-000	6	35
B2417-280-000	6	38
B2418-280-000	6	34
B2421-280-0A0	6	33
B2423-280-00A	6	44
B2423-280-00B	6	45
B2423-280-00C	6	41
B2423-280-00D	6	42
B2423-280-00E	6	43
B2424-280-000	6	32
B2548-372-RA0	8	44
B2549-372-R00	8	35
B2553-372-000	8	32
B2560-372-000	8	33
B2561-372-000	8	26
B2619-372-000	6	18
B3052-816-000	22	45
B3125-012-000	4	8
B5541-205-0A0	2	2
B5542-205-000	22	63
B8101-210-AAB	22	5
B8103-980-000	22	57
B8105-210-AAA	22	6
B8133-019-000	22	56
B8150-210-000	22	26
B8153-771-000	22	15
B8202-205-000	22	41
B9113-012-000	37	4
B9121-012-000	22	54
B9121-220-0A0	37	22
B9140-372-000	37	5
B9141-372-000	37	6
CM-2001000-01	26	23
CM-2001000-01	30	41
CM-3001000-03	32	25
CM-3001001-01	24	59
CM-3001004-01	32	11
CM-3002002-B1	22	47
CM-3004006-01	32	16
D2431-555-B00	22	61
D2527-232-D00	4	9
D2548-232-D00	8	30
D2572-M1Y-C0F	8	45
D3130-M1Y-C00	8	21
D6042-555-B00	20	37
D8113-555-B00	22	16
D8204-555-D00	22	33
EA-9500B01-00	24	55
EA-9500B01-00	26	54
EA-9500B01-00	32	8
E5006-171-000	12	57
E9567-319-000	30	47
E9607-603-000	30	46
E9613-601-000	24	5
E9613-601-000	24	15
E9613-601-000	26	4
E9613-601-000	26	11
GBR-01120000	14	1
GBR-01155000	37	16
GBR-01156000	37	17
GBR-01168000	14	17
GBR-01175000	12	46
GBR-014220A0	20	26
GBR-01423000	37	18
GBR-01426000	20	2
GBR-01428000	20	14
GBR-01437000	37	19
GBR-01441000	20	4
GBR-01601000-A	8	42
GBR-01606000	8	39
GBR-01607000	8	40
GBR-107240AC	26	2
GBR-107240A0	24	3
GBR-10726000	26	32
GBR-10728000	26	46
GBR-107430A0	24	19
GBR-107430A0	26	16
GBR-107430A0	36	7
GBR-107440A0	24	24
GBR-107440A0	26	20
GBR-107440A0	36	20
GBR-107450A0	24	23
GBR-107450A0	36	21
GBR-107460AA	24	9
GBR-107460AB	24	8
GBR-107460AC	26	7
GBR-10747000	24	18
GBR-10747000	26	15
GBR-107480AA	24	10
GBR-107480AA	36	8
GBR-107480AB	24	11
GBR-107480AB	36	9
GBR-107480AC	26	8
GBR-107480AC	36	11
GBR-107510A0	24	28
GBR-107510A0	26	35
GBR-107510A0	36	4
GBR-107610A0	24	4
GBR-107610A0	26	3
GBR-107610A0	36	5
GBR-107720A0	24	35
GBR-107720A0	26	31
GBR-107720A0	36	6
GBR-107740A0	24	36
GBR-107740A0	36	10
GBR-10775000	24	37
GBR-10782000	24	53
GBR-10782000	26	53
GBR-107850AC	26	40
GBR-107850A0	24	42
GBR-10786000	24	50
GBR-10786000	26	47
GBR-107870A0	24	54
GBR-107870A0	36	19
GBR-107910AC	36	24
GBR-107910A0	20	31
GBR-107910A0	36	18
GBR-10791000	20	35
GBR-108010A0	26	38
GBR-108010A0	36	22
GBR-108210A0	36	23
GBR-108410BC	36	13
GBR-108410B0	36	14
GBR-108420A0	28	5
GBR-108420A0	28	29
GBR-108430A0	16	20
GBR-108430A0	28	6
GBR-108440A0	16	73
GBR-108440A0	28	7
GBR-108450A0	18	66
GBR-108450A0	28	9
GBR-108460AC	28	4
GBR-108460A0	28	3
GBR-108470A0	28	8
GBR-108510AC	36	15
GBR-108510A0	36	16
GBR-10852000	10	6
GBR-10852000	28	15
GBR-10853000	16	50
GBR-10853000	28	16
GBR-10854000	16	56
GBR-10854000	28	17
GBR-108550A0	12	50
GBR-108550A0	28	18
GBR-108560A0	18	47
GBR-108560A0	28	20
GBR-108580AC	28	13
GBR-108580A0	28	12
GBR-108590A0	14	27
GBR-108590A0	28	19
GBR-11109000	12	54
GBR-11110000	12	51
GBR-11111000	12	55
GBR-11112000	12	24
GBR-11113000	12	66
GBR-11114000	12	56
GBR-11115000	12	62
GBR-207340A0	24	40
GBR-207340A0	26	26
GBR-25003000	8	59
GBR-25004000	8	57
GBR-25005000	10	41
GBR-25006000	22	58
GBR-25010000	22	71
GBR-250610AC	36	26
GBR-250810A0	26	57
GBR-250810A0	36	25
GBR-30784AA0	24	41
GBR-30784AA0	36	12
GBR-30788000	24	56
GBR-30788000	26	56
GBR-308650A0	22	65
GCT-02906000	37	7
GPF-060600A0	22	18
GPF-06080000	22	17
HA-0019100-00	24	51
HA-0019100-00	26	48
HA-0019100-1B	24	43
HA-0019100-1B	26	49
HA-0019100-1C	24	49
HA-0019100-1C	26	45
HA-0029000-00	24	46
HA-0029000-00	26	42
HA-0029800-00	24	6
HA-0029800-00	26	5
HA-0042500-00	32	26
HA-0042500-00	34	27
HD-0003600-00	14	28
HD-0005700-0A	34	41
HD-0005700-0A	34	42
HD-0005700-0A	34	43
HD-0022300-00	34	40
HD-0022300-00	34	44
HF-0013031-5S	32	13
HF-0013050-P0	32	15
HF-0030002-00	32	14
HF-0051110-0B	24	14
HF-0051110-0B	26	12
HF-0051110-00	24	13
HF-0051110-00	26	10
HF-0084020-P0	24	29
HF-0084020-P0	26	36
HF-0084063-P0	24	30
HF-0084063-P0	26	37
HG-0029100-0A	24	44
HG-0029100-0A	26	50
HG-0029100-00	24	45
HG-0029100-00	26	41
HK-0044400-20	20	36
HK-0044900-20	20	32
HL-0087301-40	24	39
HL-0087301-43	26	25
HM-0004800-10	30	24
HX-0009800-00	24	25
HX-0009800-00	26	21
HX-0011400-0A	24	47
HX-0011400-0A	26	43
HX-0012300-0C	2	6
HX-0015000-0B	24	21
HX-0015000-0B	26	18
HX-0022800-0A	24	7
HX-0022800-0A	26	6
HX-0032600-0K	30	43
HX-0033900-0B	22	52
HX-0033900-00	22	44
HX-0033900-00	30	21
HX-0040700-00	30	29
HX-0041000-0A	30	33
HX-0051100-00	30	45
MA0-11532000	22	55
MA0-11532000	26	58
MA0-11532000	32	17
MA0-14506000	24	48
MA0-14506000	26	44
MAZ-088270A0	8	38
MAZ-08828000	8	20
MAZ-08829000	8	14
MAZ-15502000	4	4
MAZ-15514000	8	3
MAZ-15515000	8	27
MAZ-15601000	6	31
MAZ-15602000	4	5
MAZ-15801000	6	30
MAZ-16522000	8	10
MAZ-166070A0	8	15
MAZ-166070B0	8	12
MAZ-166080A0	8	18
MAZ-166080B0	8	17
MDP-170B1400	6	15
MDP-170B1402	37	8
MTS-HJ100003	32	19
M3004-511-00A	32	12
M3801-476-000	30	6
M4206-461-000	30	11
M9017-580-0A0	34	28
M9024-580-0A0	34	32
M9034-580-0A0	34	30
M9035-580-0A0	34	29
M9640-510-00A	22	67
NM-3040520-SC	30	22
NM-3040520-SC	30	26
NM-6040001-SC	12	22
NM-6040001-SC	12	45
NM-6040001-SC	12	47
NM-6040001-SC	14	5
NM-6040001-SC	16	12
NM-6040001-SC	16	46
NM-6040001-SC	16	66
NM-6040001-SC	18	24
NM-6040001-SC	28	10
NM-6040001-SF	24	26
NM-6040001-SF	26	22
NM-6040003-SC	2	15
NM-6050001-SC	10	23
NM-6050001-SC	12	14
NM-6050001-SC	14	7
NM-6060001-SC	20	5
NM-6060001-SC	22	40
NM-6060001-SC	28	34
NM-6080001-SC	20	21
NM-6080001-SC	20	27
NM-6080001-SC	30	10
NM-6080002-SC	32	24
NM-6080721-SE	22	25
NM-6120003-SE	22	27
NS-6080210-SP	8	41

NUMERICAL INDEX OF PARTS 索引

PART NO 品番	PAGE 頁	REF NO
NS-6090310-SP	8	43
NS-6110310-SP	2	26
NS-6110360-SP	12	61
NS-6110360-SP	12	65
NS-6120310-SP	2	22
NS-6150310-SP	8	31
NS-6150430-SP	28	23
RC-2500001-KP	14	2
RE-0200000-K0	10	5
RE-0200000-K0	16	69
RE-0250000-K0	16	42
RE-0700000-K0	8	8
RE-1200000-K0	16	19
SB-1040016-00	6	6
SB-1080022-00	6	5
SB-1080023-00	6	9
SB-1100004-00	18	42
SB-1150004-00	10	15
SD-0500091-TP	6	40
SD-0500301-SP	8	36
SD-0550303-TP	8	34
SD-0600181-TP	2	19
SD-0600341-TP	10	7
SD-0600401-TP	10	11
SD-0600651-TP	12	58
SD-0601021-SP	10	13
SD-0640261-SP	2	20
SD-0640391-TP	8	25
SD-0700332-SP	28	24
SD-0791271-SP	6	20
SK-3311601-SE	22	34
SK-3311601-SE	22	42
SK-3311601-SE	22	64
SK-3382001-SE	22	68
SK-3382001-SE	32	28
SK-3452501-SE	24	34
SK-3452501-SE	26	30
SK-3483201-SE	22	35
SK-3512001-SE	32	18
SL-4030681-SC	24	16
SL-4030681-SC	24	32
SL-4030681-SC	24	52
SL-4030681-SC	26	13
SL-4030681-SC	26	28
SL-4030681-SC	26	52
SL-4030881-SC	24	22
SL-4030881-SC	26	19
SL-4030881-SC	28	14
SL-4030881-SC	28	30
SL-4031081-SC	14	29
SL-4031081-SC	32	3
SL-4031081-SC	32	9
SL-4031081-SF	30	15
SL-4040881-SC	30	18
SL-4040881-SC	30	20
SL-4040881-SC	30	28
SL-4040891-SC	24	20
SL-4040891-SC	24	27
SL-4040891-SC	24	31
SL-4040891-SC	24	33
SL-4040891-SC	26	17
SL-4040891-SC	26	27
SL-4040891-SC	26	29
SL-4040891-SC	26	34
SL-4040891-SC	30	4
SL-4040891-SC	30	5
SL-4040891-SC	30	16
SL-4040891-SC	30	44
SL-4041091-SC	2	7
SL-4041091-SC	22	66
SL-4041091-SC	24	57
SL-4041091-SC	26	55
SL-4041091-SC	30	31
SL-4041291-SC	24	17
SL-4041291-SC	26	14
SL-4041691-SC	32	10
SL-4043591-SC	30	25
SL-9082091-SE	22	12
SM-0040601-SA	22	53
SM-0040601-SC	16	2
SM-0040601-SC	18	3
SM-0040601-SC	20	17
SM-0040601-SC	20	34
SM-0040601-SC	28	1
SM-0861201-SA	16	21
SM-0861201-SA	16	74
SM-0861201-SA	18	67
SM-1031401-SC	12	63
SM-1040601-SC	18	70
SM-1040650-TP	6	47
SM-1041201-SC	18	69
SM-4030601-SN	20	25
SM-4040801-SF	18	5
SM-4040801-SN	20	8
SM-4040801-SN	20	12
SM-4041001-SC	24	12
SM-4041001-SC	26	9
SM-4051001-SN	20	15
SM-4860501-SC	18	8
SM-5040601-SC	24	38
SM-5040601-SC	26	33
SM-5040855-SN	4	13
SM-5040855-SN	22	70
SM-6030500-SN	6	46
SM-6030602-TP	8	53
SM-6030802-TP	18	19
SM-6030802-TP	18	57
SM-6031202-TP	12	8
SM-6031402-TP	12	38
SM-6040650-TP	2	4
SM-6040802-TN	24	58
SM-6040802-TN	26	51
SM-6040802-TP	10	39
SM-6040802-TP	16	59
SM-6040802-TP	16	63
SM-6040802-TR	16	13
SM-6040802-TR	18	34
SM-6041002-TP	12	31
SM-6041002-TP	16	9
SM-6041002-TP	16	15
SM-6041002-TP	16	23
SM-6041002-TP	16	47
SM-6041002-TP	18	55
SM-6041202-TP	8	56
SM-6041202-TP	12	27
SM-6041202-TP	16	26
SM-6041202-TP	16	32
SM-6041202-TP	16	36
SM-6041202-TP	16	62
SM-6041202-TP	18	38
SM-6041402-TP	12	35
SM-6042002-TP	12	23
SM-6042502-TP	12	41
SM-6050802-TP	10	37
SM-6051202-TP	8	60
SM-6051202-TP	18	39
SM-6051202-TP	18	54
SM-6051402-TP	12	10
SM-6051602-TP	8	50
SM-6051602-TP	18	41
SM-6051602-TP	28	31
SM-6052002-TP	18	31
SM-6052502-TP	10	18
SM-6061202-TP	8	46
SM-6061602-TP	16	70
SM-6061802-TP	6	16
SM-6062002-TP	14	33
SM-6062502-TP	22	59
SM-6063002-TP	10	27
SM-6066552-TP	22	37
SM-6083002-TN	30	7
SM-6084002-TN	32	20
SM-8030402-TP	16	30
SM-8040402-TP	14	30
SM-8040402-TP	18	52
SM-8040602-TP	10	32
SM-8040602-TP	12	18
SM-8040602-TP	14	22
SM-8042502-TP	16	11
SM-8050502-TP	18	13
SM-8050602-TP	10	9
SM-8050602-TP	12	2
SM-8050602-TP	14	8
SM-8050602-TP	14	26
SM-8050602-TP	18	44
SM-8050612-TP	10	42
SM-8050612-TP	14	12
SM-8050812-TP	14	16
SM-8050842-TP	14	24
SM-8050842-TP	14	31
SM-8086012-TP	20	10
SM-9040600-SP	28	11
SM-9042510-SC	28	2
SM-9061203-SE	22	19
SM-9082023-SE	22	22
SM-9086523-SE	22	31
SS-1060210-TP	6	39
SS-4110815-SP	20	3
SS-6080340-SP	37	29
SS-6110430-TP	6	27
SS-6111052-TP	12	25
SS-7060310-SP	2	25
SS-7090410-SP	6	28
SS-7090410-SP	8	13
SS-7090410-SP	8	19
SS-7091480-SP	8	37
SS-7110740-TP	6	26
SS-7111120-TP	2	12
SS-9090813-TP	37	26
SS-9091010-SP	8	5
SS-9110460-CP	8	22
SS-9110543-CP	4	6
SS-9151120-CP	8	54
SS-9621413-SP	8	23
TA-1250705-R0	2	5
WP-0280500-SC	18	9
WP-0320500-SC	18	59
WP-0320500-SC	20	24
WP-0370316-SD	37	25
WP-0430800-SC	10	16
WP-0430800-SC	12	29
WP-0430800-SC	12	33
WP-0430800-SC	12	37
WP-0430800-SC	12	49
WP-0430800-SC	16	17
WP-0430800-SC	16	28
WP-0430800-SC	16	29
WP-0430800-SC	16	49
WP-0430800-SC	16	61
WP-0430800-SC	16	65
WP-0430800-SC	18	36
WP-0430800-SC	20	13
WP-0430801-SC	12	59
WP-0450801-SD	2	8
WP-0450801-SD	20	29
WP-0450846-SP	6	25
WP-0501016-SD	4	7
WP-0501016-SD	8	24
WP-0531000-SC	20	30
WP-0531000-SC	28	33
WP-0531000-SD	8	48
WP-0611626-SP	22	60
WP-0612056-SD	22	38
WP-0612516-SD	8	47
WP-0612516-SD	8	55
WP-0621036-SP	22	72
WP-0641600-SC	14	19
WP-0641600-SC	16	72
WP-0641600-SC	20	6
WP-0651646-SC	22	39
WP-0671016-SE	22	20
WP-0841601-SC	20	28
WP-0841601-SC	30	9
WP-0841601-SC	32	22
WP-0852086-SC	32	21
WP-0871602-SE	22	23
WP-0871602-SE	22	28
WS-0310002-KN	12	39
WS-0310002-KN	18	58
WS-0410002-KN	8	49
WS-0410002-KN	10	40
WS-0410002-KN	12	28
WS-0410002-KN	12	32
WS-0410002-KN	12	36
WS-0410002-KN	12	48
WS-0410002-KN	12	60
WS-0410002-KN	16	16
WS-0410002-KN	16	33
WS-0410002-KN	16	45
WS-0410002-KN	16	48
WS-0410002-KN	16	57
WS-0410002-KN	16	58
WS-0410002-KN	16	60
WS-0410002-KN	16	64
WS-0410002-KN	16	67
WS-0410002-KN	18	32
WS-0410002-KN	18	35
WS-0410002-KN	22	51
WS-0410002-KS	2	16
WS-0451040-KP	2	9
WS-0510002-KN	10	19
WS-0510002-KN	28	32
WS-0510002-KP	8	61
WS-0510002-KP	8	62
WS-0510002-KS	12	13
WS-0610002-KN	10	28
WS-0610002-KN	14	34
WS-0610002-KN	16	71
WS-0610002-KN	20	7
WS-0621210-KR	22	21
WS-0820002-KR	30	8
WS-0820002-KR	32	23
WS-0861410-KR	22	24
WS-0861410-KR	22	29
WZ-0640200-KP	2	21
100-04109	26	24
111-55108	22	62
111-55207	22	32
111-58300	22	7
111-58409	22	8
111-58516	22	11
111-58607	22	9
111-59001	22	14
111-59506	22	30
135-40901	8	29
138-11906	4	12
138-12003	4	11
138-12102	37	9
138-17754	22	13
138-64509	2	17
141-01208	37	21
141-03352	6	21
141-18152	22	3
141-18251	22	4
141-41402	8	7
141-45106	4	1
141-46104	8	6
141-46203	8	4
141-46302	8	9

PART NO 品番	PAGE 頁	REF NO
141-46708	37	28
141-46757	37	24
141-46807	37	27
141-46906	4	10
141-47607	2	18
141-47755	2	14
141-47755	34	26
141-47805	2	24
141-48407	4	3
141-90052	8	1
141-90151	8	2
141-90300	8	28
141-90458	8	11
141-90557	8	16
141-91951	22	2
165-50105	10	38
165-50204	12	42
165-50402	12	40
165-50808	12	3
165-51806	12	30
165-51905	12	16
165-52309	12	21
165-52507	10	1
165-52606	10	10
165-53208	10	21
165-53208	16	5
165-53307	10	22
165-54008	10	20
165-54008	16	38
165-54503	10	30
165-56300	12	44
165-56409	12	43
165-56508	12	52
165-56607	12	34
165-56706	10	14
165-56805	10	25
165-57209	10	4
165-57209	16	68
165-57308	12	15
165-57407	12	4
165-57506	10	29
165-57605	10	34
165-57902	12	9
165-58009	37	12
165-58108	37	13
165-58801	12	17
165-59304	10	31
165-59601	10	35
165-60104	14	14
165-60203	14	32
165-60302	14	21
165-61607	14	15
165-61904	14	25
165-62001	14	18
165-62001	18	43
165-62100	14	23
165-62308	14	20
165-62803	14	4
165-62902	14	6
165-65301	16	75
165-65400	16	54
165-65509	16	55
165-65707	16	7
165-65905	16	22
165-66002	16	4
165-66408	16	25
165-66507	16	1
165-66606	16	10
165-67000	16	14
165-67166	16	31
165-67802	16	40
165-67901	16	43
165-68206	16	51
165-68404	18	30
165-68602	18	61
165-68651	18	60
165-68909	18	26
165-69204	18	68
165-69501	18	18
165-69600	18	17
165-70103	18	21
165-70202	18	22
165-70301	18	23
165-70509	18	48
165-70608	18	51
165-70707	18	33
165-70905	18	37
165-71408	18	49
165-71606	18	72
165-71804	18	45
165-71903	18	15
165-72000	16	78
165-72406	16	24
165-72505	16	41
165-72703	18	28
165-72703	18	62
165-72703	18	65
165-73008	18	14
165-73305	16	44
165-73701	18	2
165-73909	18	46
165-74006	16	18
165-74105	16	3
165-74204	16	52
165-77009	20	1
165-77207	20	16
165-77207	20	33
165-77306	20	20
165-77405	20	22
165-77504	20	11
165-79203	20	19
165-82504	28	27
165-82603	28	28
165-82702	28	35
165-83403	28	26
165-86505	22	49
170-07402	22	10
178-45009	30	30
182-00303	18	29
182-00352	18	27
182-00501	12	19
182-00501	37	14
182-00709	8	52
182-00907	18	64
182-00956	18	63
182-01103	18	53
182-01608	16	27
182-01905	18	6
182-01962	18	1
182-02002	18	7
182-02101	16	76
182-02200	16	77
182-02408	20	23
182-03307	18	4
182-04107	16	34
182-04206	18	16
182-04503	18	25
182-04602	20	9
182-04701	37	15
182-04909	16	53
182-05401	12	26
182-05708	12	12
182-05906	12	6
182-06003	12	1
182-06201	12	53
182-06409	12	7
182-06607	12	11
182-06706	10	24
182-06904	10	36
182-07209	14	11
182-07506	14	13
182-07902	10	17
182-09007	8	58
182-09502	16	35
182-12902	18	50
182-13405	18	11
182-13454	18	10
182-13504	18	12
182-17505	16	39
182-17752	10	33
182-17950	14	3
182-18008	18	71
182-18206	10	3
182-18800	12	20
182-18909	16	6
182-19204	16	37
182-19501	18	20
182-19600	18	40
182-19709	10	2
182-19808	10	12
182-19907	28	25
182-22604	22	43
182-27553	14	9
182-27603	8	51
182-27702	10	26
182-27850	10	8
182-27959	12	5
182-28106	22	50
228-91006	6	10
229-32800	37	1
229-33006	37	23
229-33105	37	2
229-33204	37	3
262-34005	37	20
400-00029	30	17
400-00029	34	12
400-00046	30	38
400-00046	34	5
400-00056	30	19
400-00056	34	4
400-03451	30	1
400-03452	30	2
400-03453	30	3
400-03458	30	48
400-03470	34	20
400-05388	30	39
400-05388	34	8
400-05390	34	31
400-05391	30	32
400-05391	34	6
400-05392	30	40
400-05392	34	7
400-05393	30	34
400-05393	34	9
400-05394	30	35
400-05394	34	11
400-05401	30	23
400-05401	34	13
400-05641	30	13
400-05648	30	12
400-05648	34	16
400-05664	34	33
400-05677	32	2
400-05677	34	18
400-05691	32	6
400-05692	32	4
400-05693	32	5
400-05694	32	7
400-05695	32	1
400-05695	34	17
400-05697	32	27
400-05705	30	14
400-05706	30	27
400-05726	30	36
400-05726	34	15
400-05727	30	37
400-05727	34	14
400-05729	34	37
400-05730	34	34
400-05731	34	35
400-05732	34	36
400-05733	34	38
400-05734	34	39
400-06475	22	69
400-06525	6	14
400-06532	6	11
400-06534	6	7
400-06535	6	8
400-06580	6	22
400-06628	34	21
400-06721	6	29
400-06725	6	23
400-06726	6	24
400-06861	34	22
400-06862	34	23
400-06863	34	24
400-06864	34	25
400-06923	6	1
400-06924	6	2
400-06925	6	3
400-06926	6	12
400-06927	6	48
400-06935	4	2
400-09859	2	23
400-11949	6	17
400-12037	28	21
400-12037	34	45
400-12037	36	17
400-12038	30	42
400-12038	34	10
400-13068	34	1
400-13099	34	2
400-13144	34	3
400-13451	37	11
400-13452	2	1
400-13640	37	10
400-14216	22	36
400-14217	20	18
400-14219	28	22
400-14220	22	48
400-14221	22	46
400-14240	22	1
400-14495	24	2
400-14495	36	1
400-14506	24	1
400-14506	36	2
400-14526	26	1
400-14526	36	3
400-16644	26	39
400-18334	2	10
400-18335	2	13
400-18355	34	19

JUKI 株式会社
〒182-8655 東京都調布市国領町8-2-1
TEL. 03-3480-1111(代表)
営業本部
TEL. 03-3430-4001(ダイヤルイン)

JUKI CORPORATION
INTERNATIONAL SALES H.Q.
8-2-1, KOKURYO-CHO, CHOFU-SHI
TOKYO 182-8655, JAPAN
PHONE : (81)3-3430-4001 to 4005
FAX : (81)3-3430-4909 · 4914 · 4984
TELEX : J22957

お買い求め、ご相談は
To order or for further information,
please contact :

Copyright © 2003 JUKI CORP.
本書の内容を無断で転載、複写することを禁止します。
All rights reserved throughout the world.

※このパーツリストは商品改良のため予告なく変更する事があります。
＊The description covered in this parts list is subject to change for improvement of the commodity without notice.
※このパーツリストは、2003年9月 現在の商品仕様で編集したものです。
＊This parts list is edited in accordance with the product specifications as of September 2003.

Printed in Japan