JUKI

1-Needle Zigzag Lockstitch Sewing Machine
高速一本針本縫千鳥縫ミシン

LZ-1280
Series

PARTS LIST

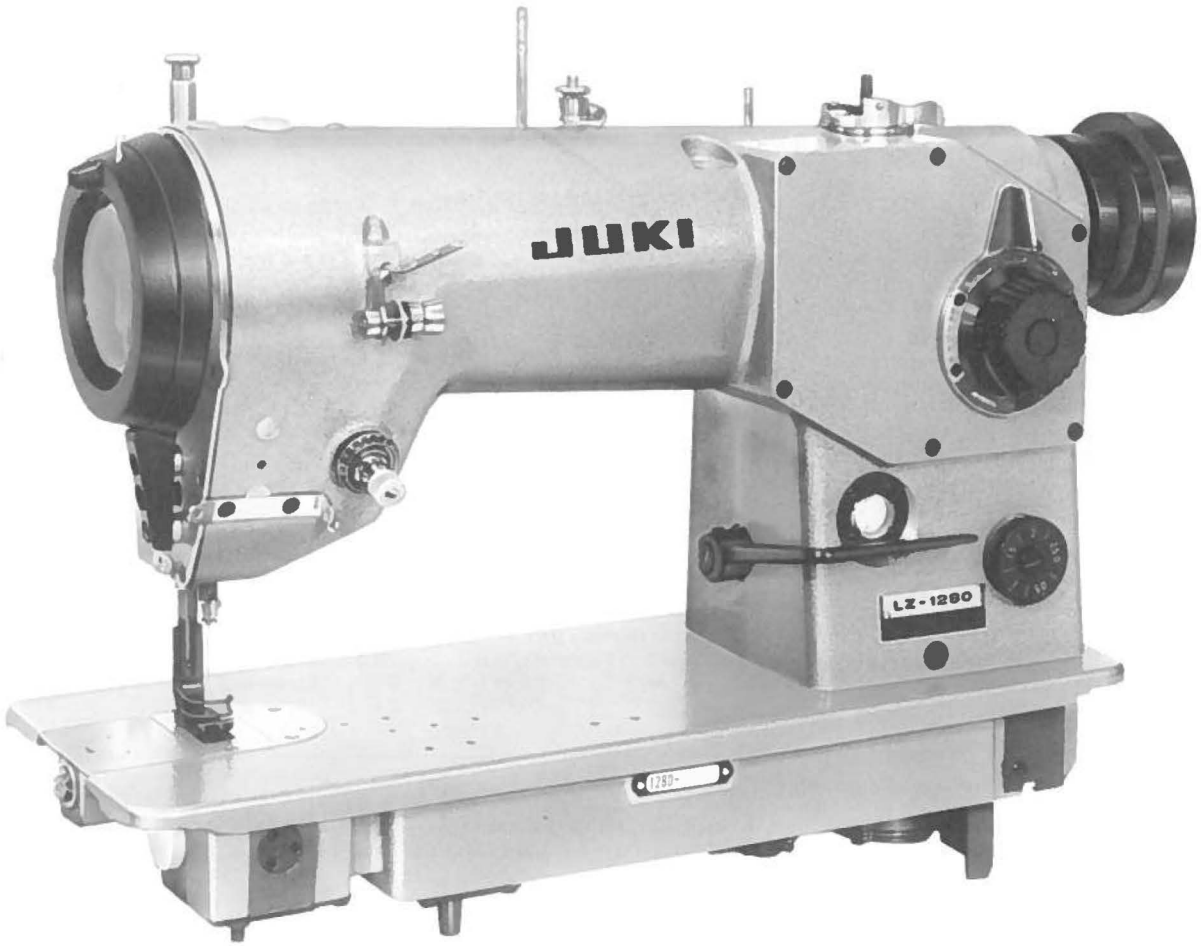

BE1280T0PJA
No.0100-07

From the library of: Superior Sewing Machine & Supply LLC

HOW TO MAKE USE OF THIS PARTS LIST
パーツリストの見方

1. The part numbers of parts shown in the figure indicate the corresponding numbers (Ref. No.) shown by the Index.
図に示された部品の品番は、図にふられているNo(Ref No)に対応するインデックスによって、その品番がわかります

2. Explanation of codes
記号の説明

1) Codes on the "Note" column
"注記" 欄の記号

① ☆ ..... means this part is changed from the previous parts list.
前回のパーツリストに対して今回変更された部品を意味します

② #01 ..... refer to the "Note" explanation at bottom of page.
◇01 ページ下の "注記" の説明を参照して下さい

2) Codes on the "E.C. (Engineering change)" column
"変更年月" 欄の記号

① A.10/83 .... Added from October, 1983
1983年10月より追加された

② D.10/83 .... Obsoleted from October, 1983
1983年10月より削除された

③ When previous parts (Obsoleted part) and new parts (Added parts) are not interchangeable with each other:
部品の互換性がない変更の場合

In this case, even obsoleted part (D.) can be ordered with the obsoleted part number, so select the parts with changed dates and place your orders.
この場合は削除(D)された品番でも注文できますから、変更年月により、いずれかの部品を選択してご注文下さい

Example (例)

Ref. No.	Note 注記	Part No. 品番	Description	E.C. 変更年月	品名	Amt. Req. 数量
1	☆	B1401-100-000	Needle bar	D.10/83	ハリホー	—
1-1	☆	B1401-100-000-A	Needle bar	A.10/83	ハリホー	1
2	☆	B1105-200-000	Frame cover	D.10/83	B1105-300-000	—
	☆	B1105-300-000	Frame cover	A.10/83	フレームカバー	1

④ In case when previous parts and new part are interchangeable with each other:
部品の互換性がある場合の変更

In this case the new part number is replaced on the " 品名 (Japanese)" column of the previous parts, so please order by the new part number.
この場合は、旧部品の和文品名欄にそれにかわる新しい品番が記入してありますので、新しい品番でご注文下さい

⑤ C.10/83

1	☆	B1105-500-000	Frame cover	C.10/83	~~B1105-600-000~~	1
		Correct No. 正しい品番			Wrong No. 誤まり品番	

Please order by the correct part number.
正しい品番でご注文下さい

⑥ M.10/83 ..... The amount required is changed from October, 1983
The new amount required is shown in the "Amt. Req". column.
1983年10月より数量が変更になった。この場合数量欄には新しい数量が表示してあります

3) Codes on the "Amt. Req." column
"数量" 欄の記号

① 2 ..... Indicates amount required is 2.
数量、2個を表わします

② 2.0 ..... Indicates length in meters. (unit is meter)
長さ、2メートルを表わします (単位はメートルです)

③ — ..... Indicates parts obsoleted from the parts list.
このパーツリストから削除された部品です

④ (1) ..... Indicates sub parts which construct the assembly part.
Assembly part is shown as "asm." and クミ in Japanese, in the "Description" column.
組部品を構成している子部品を表わします。組部品は品名欄に英文で "asm" 和文でクミと表示してあります

When Ordering The Spare Parts:

In order to ensure that we deliver the correct parts to you, please clearly state when ordering the corresponding PART NUMBER (ex. B1109-012-A00) and also the PARTS LIST NUMBER (ex. 0010-01, given at the top right of the cover) or the MACHINE SERIAL NUMBER, because there are some parts which have been changed.

補用部品注文の際のご注意

このパーツリストに記載されている補用部品をご注文の際は、部品の番号(例えば、B1109-012-A00)でご注文下さい。合わせて、ご覧のパーツリストの管理番号 (表紙右下、例えば、No0010-01)又は、機械番号をご連絡頂ければ幸いです。又、改良のため部品の一部が変更になる場合がありますのでご了承下さい。

From the library of: Superior Sewing Machine & Supply LLC

CONTENTS
目　次

1. FRAME & MISCELLANEOUS COVER COMPONENTS (1)
頭部、外装関係（1）..... 1
2. FRAME & MISCELLANEOUS COVER COMPONENTS (2)
頭部、外装関係（2）..... 3
3. MAIN SHAFT & NEEDLE BAR COMPONENTS
上軸、針棒関係 5
4. NEEDLE VIBRATOR & ADJUSTMENT COMPONENTS
針振り調節関係 7
5. PRESSER BAR & FEED REGULATOR COMPONENTS
押エ棒、送り調節器関係 9
6. FEED MECHANISM COMPONENTS
送り関係 11
7. HOOK DRIVING SHAFT & HOOK COMPONENTS
下軸、釜関係 13
8. LUBRICATION COMPONENTS
給油関係..... 14
9. OIL RESERVOIR & KNEE LIFTER COMPONENTS
油溜、膝上ゲ関係..... 15
10. BOBBIN WINDER COMPONENTS
糸巻関係..... 16
11. BELT COVER COMPONENTS
ベルトカバー関係..... 19
12. THREAD STAND COMPONENTS (1)
糸立装置関係（1）..... 20
13. THREAD STAND COMPONENTS (2)
糸立装置関係（2）..... 21
14. EXCLUSIVE PARTS FOR LZ-1286
LZ-1286専用部品..... 22
15. EXCLUSIVE PARTS FOR LZ-1287
LZ-1287専用部品..... 23
16. EXCLUSIVE PARTS FOR LZ-1285
LZ-1285専用部品..... 25
17. LZ-1280, 1286/RF-1 (SPECIAL ORDER PARTS)
(特別注文部品)..... 27
NUMERICAL INDEX
索引..... 28

(Note)
This parts list is edited with the model LZ-1280 taken as standard.
(ご注意)
このパーツリストはLZ-1280を標準に作成してあります。

From the library of: Superior Sewing Machine & Supply LLC

1. FRAME & MISCELLANEOUS COVER COMPONENTS (1)

頭部、外装関係（1）

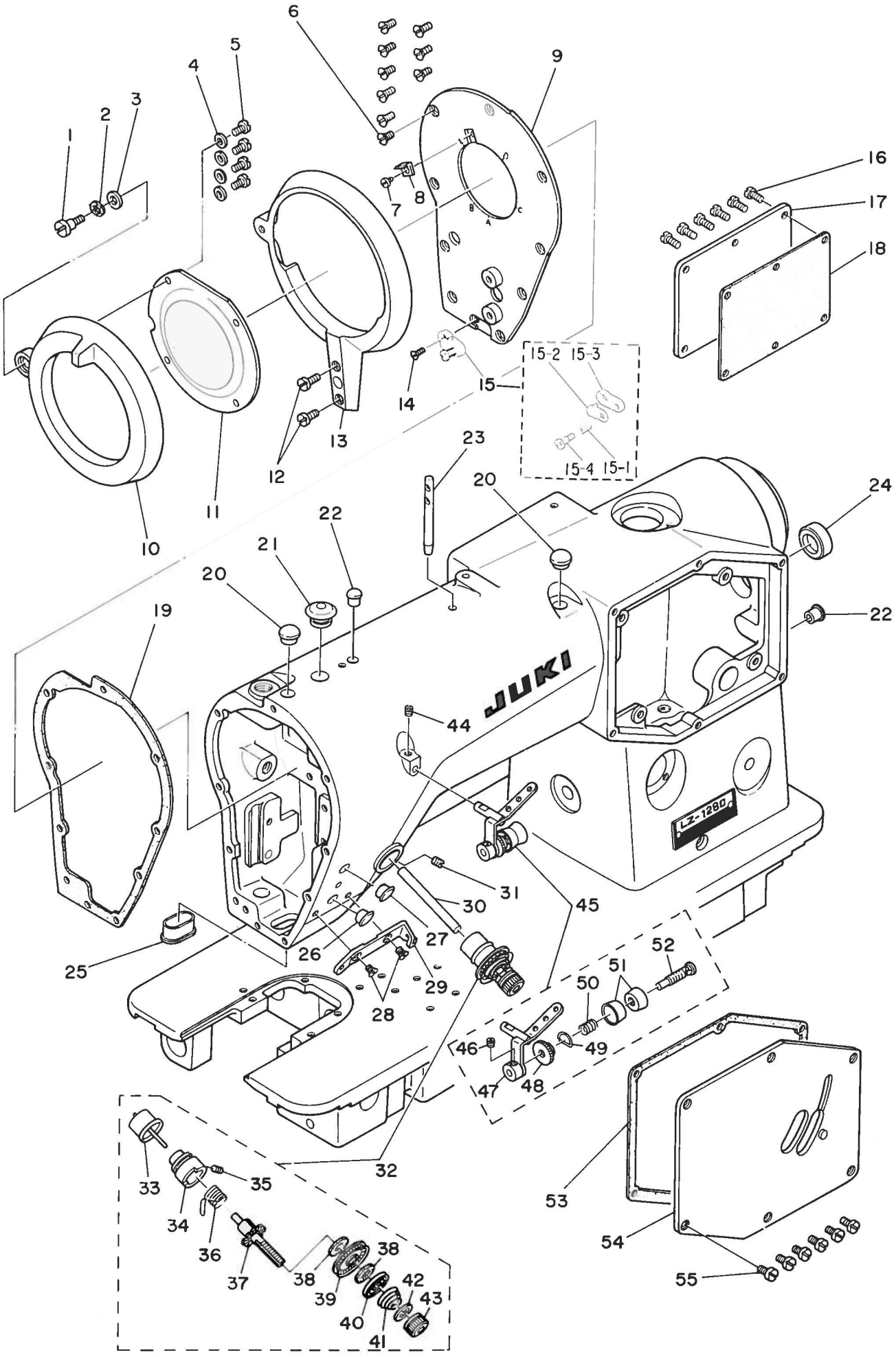

From the library of: Superior Sewing Machine & Supply LLC

Ref. No.	Note 注記	Part No. 品番	Description	E.C. 変更年月	品名	Amt. Req. 数量
1		SD-0640751-SP	HINGE SCREW D= 6.35 H= 7.5		ﾀﾞﾝﾈｼﾞ D=6.35 H=7.5	1
2		WZ-0641510-KP	WAVED WASHER 6.4X11X0.3		ﾅﾐｶﾞﾀﾜｯｶﾞﾈ 6.4X11X0.3	1
3		WP-0651056-SD	WASHER 6.5X11X1		ﾋﾗﾜｯｶﾞﾈ 6.5X11X1	1
4		WP-0450000-SD	WASHER 4.5X8X0.5		ﾋﾗﾜｯｶﾞﾈ 4.5X8X0.5	4
5		SS-6090810-SP	SCREW 9/64-40 L= 7.5		ﾋﾗﾈｼﾞ 9/64-40 L=7.5	4
6		SS-1110840-SP	SCREW 11/64-40 L=8		ｻﾗﾈｼﾞ 11/64-40 L=8	9
7		SS-7080410-SP	SCREW 1/8-44 L= 3.8		ﾏﾙﾋﾗﾈｼﾞ 1/8-44 L=3.8	1
8		100-01709	TAKE-UP THREAD CUTTER		ﾃﾝﾋﾞﾝﾒｽ	1
9		100-01451	FACE PLATE ASM.		ﾒﾝｲﾀ ｸﾐ	1
10		100-01907	TAKE-UP COVER		ﾃﾝﾋﾞﾝｶﾊﾞｰ B	1
11		100-02004	TAKE-UP COVER WINDOW		ﾃﾝﾋﾞﾝｶﾊﾞｰ ｳｼﾖｰﾊﾞﾝ	1
12		SS-7111120-SP	SCREW 11/64-40 L=10.5		ﾏﾙﾋﾗﾈｼﾞ 11/64-40 L=10.5	2
13		100-01808	TAKE-UP COVER		ﾃﾝﾋﾞﾝｶﾊﾞｰ A	1
14		SS-2090710-SP	SCREW 9/64-40 L=7		ﾏﾙｻﾗﾈｼﾞ 9/64-40 L=7	1
15		100-06500	TAKE-UP THREAD GUIDE	D.05/81	100-06856	-
		100-06856	TAKE-UP THREAD GUIDE ASM.	A.05/81	ﾃﾝﾋﾞﾝｲﾄｱﾝﾅｲ B ｸﾐ	1
15-1		100-04802	SPRING	A.05/81	ﾊﾘｲﾄｵｻｴｲﾀ ﾊﾞﾈ A	(1)
15-2		100-04901	HOLDER PLATE	A.05/81	ﾊﾘｲﾄｵｻｴｲﾀ	(1)
15-3		100-06807	TAKE-UP THREAD GUIDE	A.05/81	ﾃﾝﾋﾞﾝｲﾄｱﾝﾅｲ B	(1)
15-4		SD-0380551-SL	HINGE SCREW D= 3.80 H= 5.5	A.05/81	ﾀﾞﾝﾈｼﾞ D=3.8 H=5.5	(1)
16		SS-7110910-SP	SCREW		ﾏﾙﾋﾗﾈｼﾞ 11/64-40 L=8.5	6
17		100-01105	SIDE COVER		ｱｰﾑ ｿｸﾒﾝｶﾊﾞｰ B	1
18		100-01204	GASKET		ｱｰﾑ ｿｸﾒﾝｶﾊﾞｰ B ﾊﾟｯｷﾝ	1
19		100-01600	GASKET		ﾒﾝｲﾀ ﾊﾟｯｷﾝ	1
20		TA-1050504-RO	RUBBER PLUG	A.12/79	ﾄﾒｾﾝ	2
21		TA-1250705-RO	RUBBER PLUG	A.12/79	ﾄﾒｾﾝ	1
22		B1158-581-CCO	RUBBER PLUG		ｱﾅ ｷｬｯﾌﾟ	2
23		B1114-012-000	THREAD GUIDE PIN		ｲﾄｱﾝﾅｲﾎﾟｰ	1
24		TA-2101002-RO	RUBBER PLUG	A.12/79	ﾄﾒｾﾝ	1
25		100-00206	ARM OIL SHIELD		ｱｰﾑ ｱﾌﾞﾗﾎﾞｰｼ	1
26		TA-0900707-RO	RUBBER PLUG	A.12/79	ﾄﾒｾﾝ	1
27		TA-0900707-RO	RUBBER PLUG	A.12/79	ﾄﾒｾﾝ	1
28		SS-1110840-SP	SCREW 11/64-40 L=8	A.07/79	ｻﾗﾈｼﾞ 11/64-40 L=8	2
29		100-06302	TAKE-UP THREAD GUIDE	A.07/79	ﾃﾝﾋﾞﾝ ｲﾄｱﾝﾅｲ A	1
30		100-06401	TENSION RELEASE AUXILIARY PIN		ｲﾄﾚﾙﾒ ﾎｼﾞｮﾖﾋﾟﾝ	1
31		SS-8110750-SP	SCREW 11/64-40 L= 6.5		ﾄﾒﾈｼﾞ 11/64-40 L=6.5	1
32		100-05460	TENSION CONTROLLER ASM.		ｲﾄﾁｮｰｼｻﾞﾗ ｸﾐ	1
33	*	100-06252	TENSION RELEASE PIN ASM.	D.06/82	ｲﾄﾚﾙﾒﾋﾟﾝ ｸﾐ	-
	*	100-07854	TENSION RELEASE PIN ASM.	A.06/82	ｲﾄﾚﾙﾒﾋﾟﾝ ｸﾐ	(1)
34		100-05809	TENSIN POST SOCKET		ｲﾄﾁｮｰｼﾎﾞｰﾀﾞｲ	(1)
35		SS-8090670-SP	SCREW 9/64-40 L= 5.5		ﾄﾒﾈｼﾞ 9/64-40 L=5.5	(1)
36		100-06104	TAKE-UP SPRING		ｲﾄﾄﾘﾊﾞﾈ	(1)
37		100-05650	TENSION POST ASM.		ｲﾄﾁｮｰｼﾎﾞｰ ｸﾐ	(1)
38	*	100-05908	FELT	D.06/82	ｲﾄﾁｮｰｼｻﾞﾗ ﾌｪﾙﾄ	-
	*	100-05916	FELT	A.06/82	ｲﾄﾁｮｳｼｻﾞﾗ ﾌｪﾙﾄ	(2)
39		100-05452	TENSION DISC ASM.		ｲﾄﾁｮｰｼｻﾞﾗ ｸﾐ	(1)
40		100-06005	TENSION DISC HOLDER		ｲﾄﾁｮｰｼｻﾞﾗ ｵｻｴ	(1)
41		B3129-012-ACO	TENSION SPRING		ｲﾄﾁｮｰｼﾊﾞﾈ A	(1)
42		B3120-125-000	TENSION DISC STOPPER		ｲﾄﾁｮｰｼｻﾗ ﾀｲﾃﾝﾄﾒ	(1)
43		B3116-125-000	TENSION NUT		ｲﾄﾁｮｰｼ ﾅｯﾄ	(1)
44		SS-8110750-SP	SCREW 11/64-40 L= 6.5		ﾄﾒﾈｼﾞ 11/64-40 L=6.5	1
45		100-05353	PRE-TENSION CONTROLLER ASM.		ﾌﾟﾘﾃﾝｼｮﾝ ｸﾐ	1
46		SS-8090410-SP	SCREW 9/64-40 L= 3.5		ﾄﾒﾈｼﾞ 9/64-40 L=3.5	(1)
47		100-05056	THREAD EYELET ASM.		ﾐﾂﾒ ｲﾄｶｹ ｸﾐ	(1)
48		G5106-151-000	TENSION NUT		ｲﾄﾁｮｰｼ ﾅｯﾄ	(1)
49		G5109-151-000	SPRING		ｲﾄﾁｮｰｼ ﾅｯﾄ ﾄﾒﾊﾞﾈ	(1)
50		G5107-151-000	SPRING		ｲﾄﾁｮｰｼ ﾊﾞﾈ	(1)
51		G5108-151-000	THREAD DISC		ｲﾄﾁｮｰｼ ｻﾗ	(2)
52		100-05304	PRE-TENSION PIN		ﾌﾟﾘﾃﾝｼｮﾝｼﾝｸ	(1)
53		100-01006	GASKET		ｱｰﾑ ｿｸﾒﾝｶﾊﾞｰ A ﾊﾟｯｷﾝ	1
54		100-00859	SIDE COVER ASM.		ｱｰﾑ ｿｸﾒﾝｶﾊﾞｰ A ｸﾐ	1
55		SS-7110910-SP	SCREW		ﾏﾙﾋﾗﾈｼﾞ 11/64-40 L=8.5	6

From the library of: Superior Sewing Machine & Supply LLC

2. FRAME & MISCELLANEOUS COVER COMPONENTS (2)

頭部、外装関係（2）

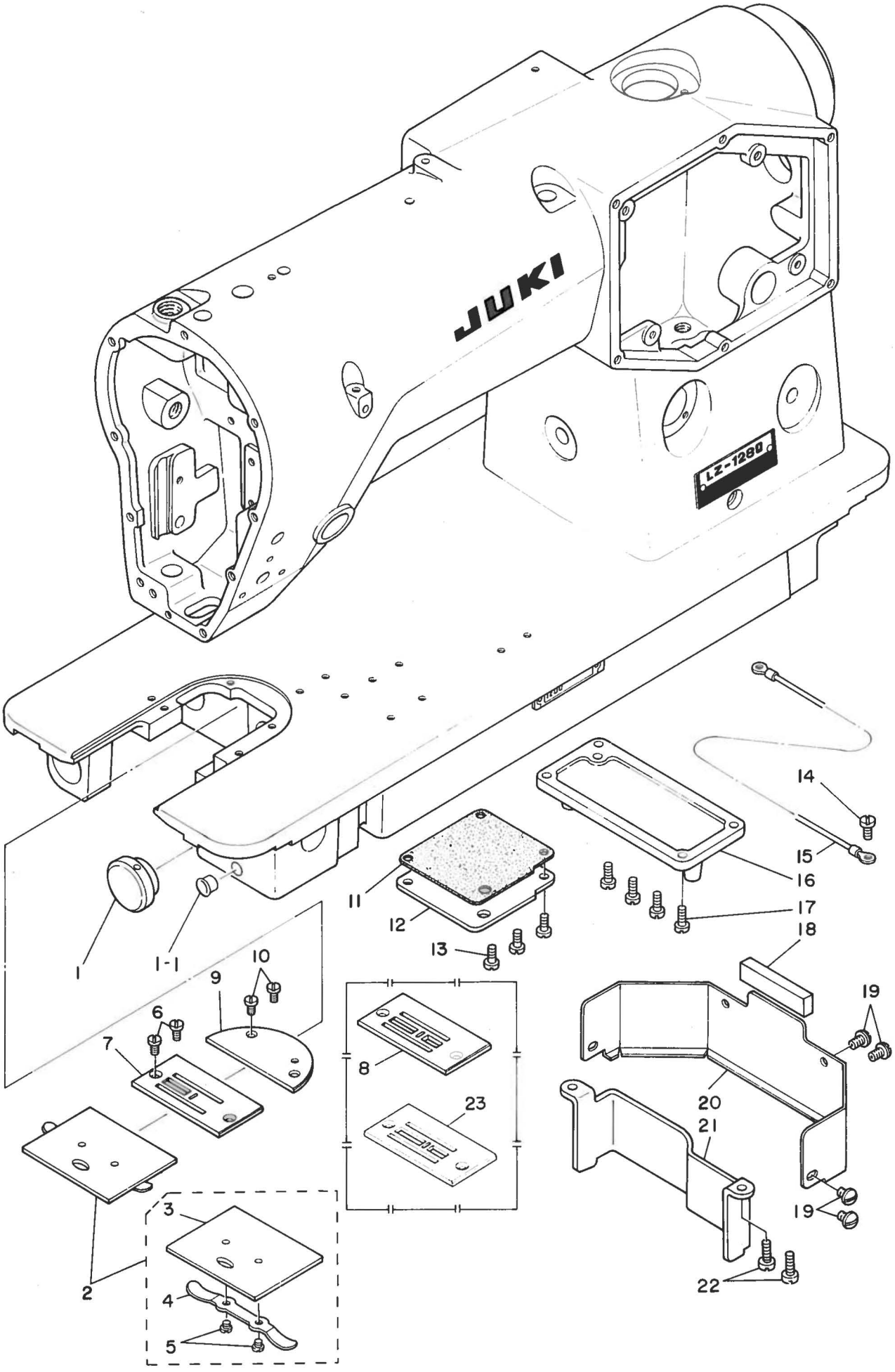

From the library of: Superior Sewing Machine & Supply LLC

Ref. No.	Note 注記	Part No. 品番	Description	E.C. 変更年月	品名	Amt. Req. 数量
1		100-32001	NYLON CAP		ｶｻﾊｸﾞﾙﾏ ﾊｺﾌﾞ ｷｬｯﾌﾟ	1
1-1		TA-0850604-R0	RUBBER PLUG	A.12/79	ﾄﾒｾﾝ	1
2		100-04356	BED SLIDE ASM.		ｽﾍﾞﾘｲﾀ ｸﾐ	1
3		100-04307	BED SLIDE		ｽﾍﾞﾘｲﾀ	(1)
4		B1111-012-000	BED SLIDE SPRING		ｽﾍﾞﾘｲﾀ ﾊﾞﾈ	(1)
5		SS-6060210-SP	SCREW 3/32-56 L= 1.9		ﾋﾗﾈｼﾞ 3/32-56 L=1.9	(2)
6		SS-2090820-TP	SCREW 9/64-40 L=8		ﾏﾙｻﾗﾈｼﾞ 9/64-40 L=8	2
7	#01	100-02103	THROAT PLATE A		ﾊｻｲﾀ A	1
8	#02	100-02202	THROAT PLATE B		ﾊｻｲﾀ B	1
9		100-04208	BED PLATE		ﾊﾝｹﾞﾌﾞﾀ	1
10		SS-2090820-TP	SCREW 9/64-40 L=8		ﾏﾙｻﾗﾈｼﾞ 9/64-40 L=8	2
11		100-31904	GASKET		ｶｻﾊｸﾞﾙﾏ ﾊｺﾌﾞ ﾊﾟｯｷﾝ	1
12		100-31805	HELICAL BEVEL GEAR BOX COVER		ｶｻﾊｸﾞﾙﾏ ﾊｺﾌﾞﾌﾀ	1
13		SS-7110910-SP	SCREW		ﾏﾙﾋﾗﾈｼﾞ 11/64-40 L=8.5	3
14		SS-7110910-SP	SCREW		ﾏﾙﾋﾗﾈｼﾞ 11/64-40 L=8.5	1
15		100-39451	GROUND WIRE ASM.		ｸﾞﾗﾝﾄﾞｾﾝ ｸﾐ	1
16		100-30500	HELICAL GEAR BOX COVER		ｶﾏ ｸﾄﾞｰﾊｸﾞﾙﾏ ﾊｺﾌﾞﾌﾀ	1
17		SS-7111120-SP	SCREW 11/64-40 L=10.5		ﾏﾙﾋﾗﾈｼﾞ 11/64-40 L=10.5	4
18		100-37406	OIL SHIELD RUBBER		ｴﾎﾞｰﾊﾝ ｺﾞﾑｻﾞ	1
19		SS-5110740-TP	SCREW 11/64-40 L= 6.5		ﾄﾗｽﾈｼﾞ 11/64-40 L=6.5	4
20		100-37307	OIL SHIELD PLATE		ｴﾎﾞｰﾊﾝ	1
21		100-01303	BED SUPPORT PLATE		ﾍﾞｯﾄﾞ ｼｼﾞﾊﾝ	1
22		SS-6111210-SP	SCREW 11/64-40 L=12		ﾋﾗﾈｼﾞ 11/64-40 L=12	2
23	#09	100-02400	THROAT PLATE	A.01/82	ﾊｻｲﾀ B	1

Note(注記) #01.....For LZ-1280 LZ-1280用

#02.....For LZ-1280B LZ-1280B用

(For attaching elastic tapes.) (ゴムテープ付け用)

#09.....Special order part 特別注文部品

From the library of: Superior Sewing Machine & Supply LLC

3. MAIN SHAFT & NEEDLE BAR COMPONENTS

上軸、針棒関係

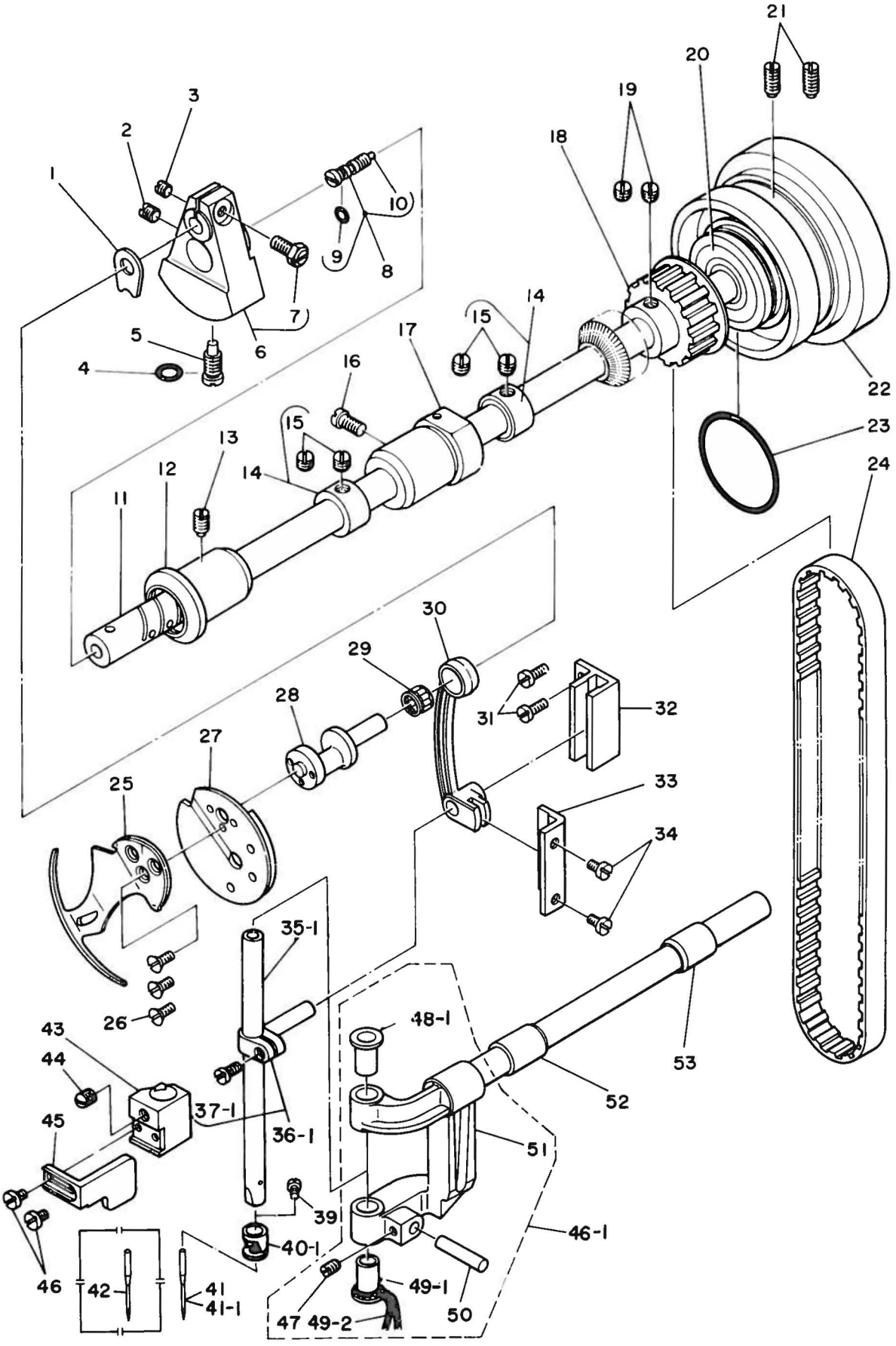

From the library of: Superior Sewing Machine & Supply LLC

Ref. No.	Note 注記	Part No. 品番	Description	E.C. 変更年月	品名	Amt. Req. 数量
1		100-08506	COUNTERWEIGHT PROTECTING PLATE		ｳﾘｱｲｵﾓﾘ ｶﾊﾞｰｲﾀ	1
2		SS-868C730-SP	SCREW 9/32-28 L=7		ﾄﾒﾈｼﾞ 9/32-28 L=7	1
3		SS-866C610-TP	SCREW 1/4-40 L=6		ﾄﾒﾈｼﾞ 1/4-40 L=6	1
4		RO-0442401-00	RUBBER RING		Oﾘﾝｸﾞ	1
5		SS-7681650-TP	SCREW 9/32-28 L=16		ﾏﾙﾋﾗﾈｼﾞ 9/32-28 L=16	1
6		100-08464	COUNTERWEIGHT ASM.		ｳﾘｱｲｵﾓﾘ ｸﾐ	1
7		SS-9661230-CP	SCREW 1/4-40 L=12		ﾛｳｶｸﾎﾞﾙﾄ 1/4-40 L=12	(1)
8		10C-35657	PIN ASM.		ｳﾜｼﾞｸｼｮﾝ ｿｰｺﾆｰﾋﾟﾝ ｸﾐ	1
9		RO-0291801-00	RUBBER RING		Oﾘﾝｸﾞ	(1)
10		81810-552-000	OIL WICK		ｼﾀｼﾞｸ ﾏｪ ﾄﾒﾈｼﾞ ｴｼﾝ	(1)
11		100-08001	MAIN SHAFT		ｳﾜｼﾞｸ	1
12		100-08100	MAIN SHAFT BUSHING, FRONT		ｳﾜｼﾞｸ ﾏｪﾒﾀﾙ	1
13		SS-8151150-SP	SCREW 15/64-28 L=10.5		ﾄﾒﾈｼﾞ 15/64-28 L=10.5	1
14		CS-147121A-SH	THRUST COLLAR ASM. D=14.72 W=12		ｽﾗｽﾄｳｫｯ D=14.72 W=12 ｸﾐ	2
15		SS-8660610-TP	SCREW 1/4-40 L=6		ﾄﾒﾈｼﾞ 1/4-40 L=6	(4)
16		SS-7151120-SP	SCREW 15/64-28 L=11		ﾏﾙﾋﾗﾈｼﾞ 15/64-28 L=11	1
17		81203-227-000-A	MAIN SHAFT BUSHING, INTERMEDIATE		ｳﾜｼﾞｸ ﾅｶﾒﾀﾙ	1
18		100-08308	MAIN SHAFT SPROCKET		ｳﾜｼﾞｸ ｽﾌﾟﾛｹｯﾄ	1
19		SS-8660610-TP	SCREW 1/4-40 L=6		ﾄﾒﾈｼﾞ 1/4-40 L=6	2
20		SB-1200001-00	BEARING D=20X47		ﾎﾞｰﾙﾍﾞｱﾘﾝｸﾞ D=20X47	1
21		SS-8151150-TP	SCREW 15/64-28 L=10.5		ﾄﾒﾈｼﾞ 15/64-28 L=10.5	2
22		100-08209	HANDWHEEL		ﾊｽﾞﾐｸﾞﾙﾏ	1
23		RO-4372002-00	RUBBER RING		Oﾘﾝｸﾞ	1
24		100-09009	TIMING BELT		ﾀｲﾐﾝｸﾞ ﾍﾞﾙﾄ	1
25		100-08902	THREAD TAKE-UP		ﾃﾝﾋﾟﾝ	1
26		SS-1090930-SP	SCREW 9/64-40 L=8.6		ｻﾗﾈｼﾞ 9/64-40 L=8.6	3
27		100-08753	TAKE-UP COUNTERWEIGHT ASM.		ﾃﾝﾋﾟﾝ ｳﾘｱｲｵﾓﾘ ｸﾐ	1
28		100-08605	NEEDLE BAR CRANK		ﾊﾘﾎﾞｰ ｸﾗﾝｸ	1
29	#03	B1905-541-A00	NEEDLE BEARING		ﾃﾝﾋﾟﾝ ﾆｰﾄﾞﾙﾍﾞｱﾘﾝｸﾞ	1
30		10C-10403	NEEDLE BAR CRANK ROD		ﾊﾘﾎﾞｰ ｸﾗﾝｸﾛｯﾄﾞ	1
31		SS-7111120-SP	SCREW 11/64-40 L=10.5		ﾏﾙﾋﾗﾈｼﾞ 11/64-40 L=10.5	2
32		10C-10304	GUIDE BLOCK		ﾊﾘﾎﾞｰｶﾞｲﾄﾞ ｱﾝﾅｲ	1
33		100-10502	CRANK ROD GUIDE		ｸﾗﾝｸﾛｯﾄﾞ ｱﾝﾅｲ	1
34		SS-7110710-SP	SCREW 11/64-40 L=7		ﾏﾙﾋﾗﾈｼﾞ 11/64-40 L=7	2
35-1		100-10015	NEEDLE BAR D=7.24	A.08/79	ﾊﾘﾎﾞｰ D=7.24	1
36-1		10C-10262	NEEDLE BAR CONNECTION ASM.	A.08/79	ﾊﾘﾎﾞｰｶﾞｲﾄｸﾐ	1
37-1		SS-7090910-TP	SCREW 9/64-40 L= 8.5	A.08/79	ﾏﾙﾋﾗﾈｼﾞ 9/64-40 L=8.5	(1)
39		SS-7080520-SP	SCREW 1/8-44 L=4.9		ﾏﾙﾋﾗﾈｼﾞ 1/8-44 L=4.9	1
40-1		100-10114	NEEDLE CLAMP	A.08/79	ﾊﾘﾎﾞｰｲﾄｶｹ	1
41-1	*	MSG-19651100	NEEDLE (SGX1965 #11)	D.04/84	ﾊﾘ SGX1965 #11	-
42		MC-1918F07-50	NEEDLE (SY1965 75)		ﾊﾘ SY1965 75	1
43		100-13605	STOPPER PLATE BASE		ｱﾝﾅｲｼﾞｸｳｹ ｺﾃｲﾍﾞｲ	1
44		SS-8660610-TP	SCREW 1/4-40 L=6		ﾄﾒﾈｼﾞ 1/4-40 L=6	1
45		100-13506	STOPPER PLATE		ﾊﾘﾎﾞｰ ｼｼﾞﾀﾞｲ ｱﾝﾅｲｼﾞｸｳｹ	1
46		SS-6080610-TP	SCREW 1/8-44 L=6		ﾋﾗﾈｼﾞ 1/8-44 L=6	2
46-1		100-13266	NEEDLE BAR YOKE ASM. B	A.08/79	ﾊﾘﾎﾞｰ ｼｼﾞﾀﾞｲ B ｸﾐ	1
47		SS-8120740-SP	SCREW 3/16-28 L=7	A.08/79	ﾄﾒﾈｼﾞ 3/16-28 L=7	(1)
48-1		10C-13019	NEEDLE BAR BUSHING, UPPER D=7.24	A.08/79	ﾊﾘﾎﾞｰﾒﾀﾙ ｳｴ D=7.24	(1)
49-1		100-13118	NEEDLE BAR BUSHING, LOWER D=7.24	A.08/79	ﾊﾘﾎﾞｰﾒﾀﾙ ｼﾀ D=7.24	(1)
49-2		CQ-2020000-00	OIL WICK	A.08/79	ｴｼﾝ	(0.1)
50		10C-13407	GUIDE PIN	A.08/79	ﾊﾘﾎﾞｰ ｼｼﾞﾀﾞｲｼﾞｸ	(1)
51		10C-13274	NEEDLE BAR YOKE ASM.	A.08/79	ﾊﾘﾎﾞｰｼｼﾞﾀﾞｲ ｸﾐ	(1)
52		10C-13704	SHAFT BUSHING, FRONT		ﾊﾘﾎﾞｰ ｼｼﾞﾀﾞｲｼﾞｸ ﾏｪﾒﾀﾙ	1
53		10C-13803	SHAFT BUSHING, REAR		ﾊﾘﾎﾞｰ ｼｼﾞﾀﾞｲｼﾞｸ ｳｼﾛﾒﾀﾙ	1

Note(注記) #03.....Selective part　　選択部品

From the library of: Superior Sewing Machine & Supply LLC

4. NEEDLE VIBRATOR & ADJUSTMENT COMPONENTS

針振り調節関係

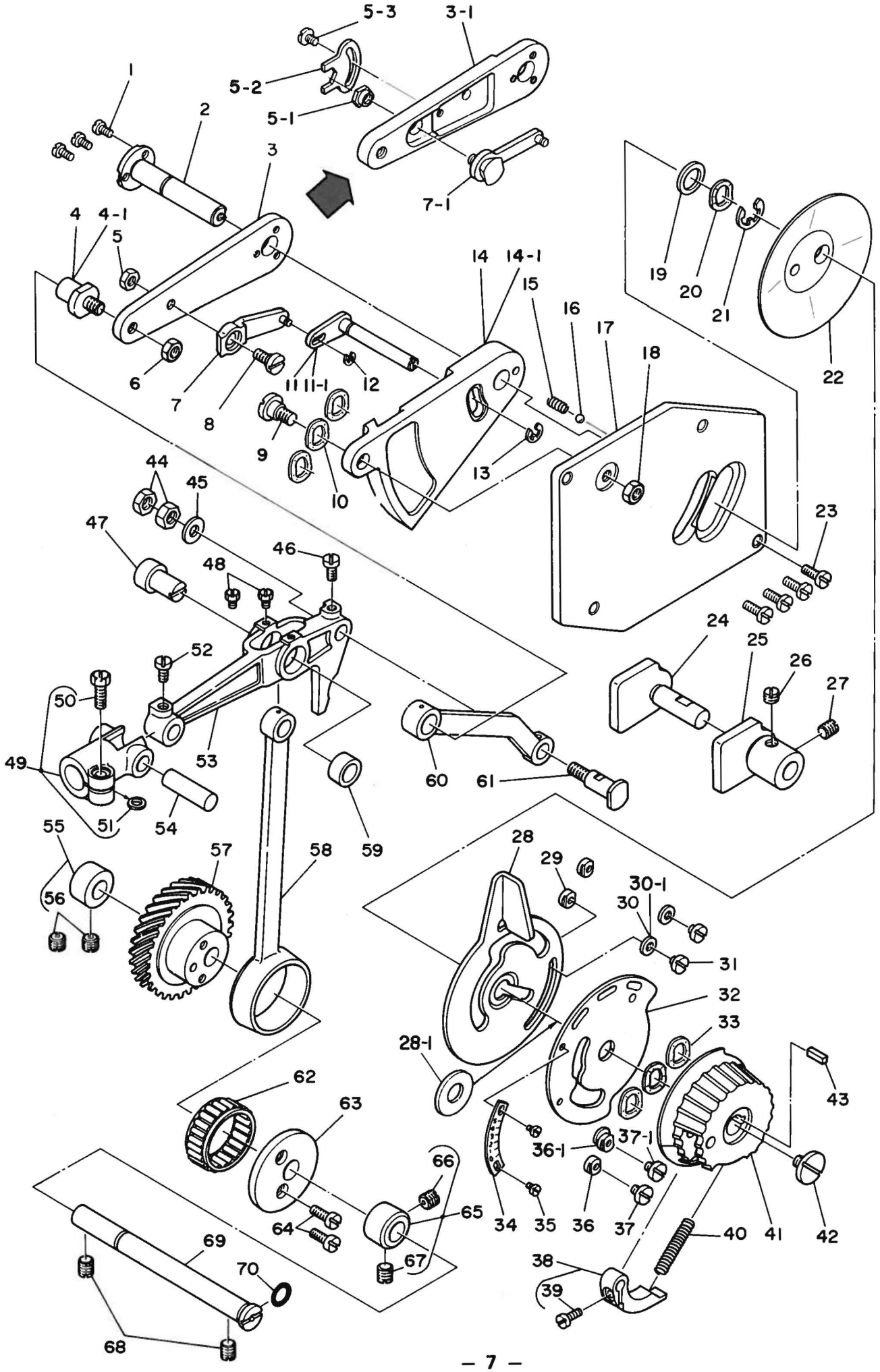

From the library of: Superior Sewing Machine & Supply LLC

Ref. No.	Note 注記	Part No. 品番	Description	E. C. 変更年月	品名	Amt. Req. 数量
1		SS-6090620-SP	SCREW 9/64-40 L=6		ﾋﾗﾈｼﾞ 9/64-40 L=6	3
2		100-16103	SHAFT		ﾌﾘﾊﾊﾞ ﾁｮｰｾﾂｳﾃﾞｼﾞｸ A	1
3		100-16004	ARM	D.10/80	ﾌﾘﾊﾊﾞ ﾁｮｰｾﾂｳﾃﾞ	-
3-1		100-16012	ARM	A.10/80	ﾌﾘﾊﾊﾞﾁｮｰｾﾂｳﾃﾞ	1
4	◇03	100-16202	SHAFT	D.10/80	ﾌﾘﾊﾊﾞ ﾁｮｰｾﾂｳﾃﾞｼﾞｸ B,A	-
4-1	◇03	100-16210	SHAFT	A.10/80	ﾌﾘﾊﾊﾞﾁｮｰｾﾂｳﾃﾞｼﾞｸ B (A)	1
5		NS-6620310-SP	NUT 3/16-32	D.10/80	ﾛｯｶｸﾅｯﾄ 3/16-32	-
5-1		100-18000	NUT	A.10/80	ｺﾃｰｼﾅｯﾄ	1
5-2		100-18109	NUT STOPPER	A.10/80	ｺﾃｰｼﾅｯﾄﾄﾒ	1
5-3		SS-6090540-SP	SCREW 9/64-40 L= 5.0	D.06/81	SS-6090520-SP	-
		SS-6090520-SP	SCREW 9/64-40 L= 5.0	A.06/81	ﾋﾗﾈｼﾞ 9/64-40 L=5	1
6		NS-6150310-SP	NUT 15/64-28		ﾛｯｶｸﾅｯﾄ 15/64-28	1
7		100-17150	STOPPER ASM.	D.10/80	ﾌﾘﾊﾊﾞ ﾁｮｰｾﾂｳﾃﾞ ｺﾃｲｼ ｸﾐ	-
7-1		100-17168	STOPPER ASM.	A.10/80	ﾌﾘﾊﾊﾞﾁｮｰｾﾂｳﾃﾞ ｺﾃｲｼ ｸﾐ	1
8		SD-0640323-TP	HINGE SCREW D= 6.35 H= 3.2	D.10/80	ﾀﾞﾝﾈｼﾞ D=6.35 H=3.2	-
9	◇05	SD-0800402-TP	HINGE SCREW D= 8 H= 4		ﾀﾞﾝﾈｼﾞ D=8 H=4	1
10	◇05	WZ-0850302-K0	WAVED WASHER 8.5X13X0.3	M.08/79	ﾅﾐｶﾞﾀｻﾞｶﾞﾈ 8.5X12.5X0.3	3
11		100-15352	LEVER ASM.	D.10/80	ｶﾄﾞｰﾚﾊﾞｰ ｼﾞｸ ｸﾐ	-
11-1		100-15360	LEVER ASM.	A.10/80	ｶﾄﾞｰﾚﾊﾞｰｼﾞｸ ｸﾐ	1
12		RE-0200000-K0	SNAP RING 2		Eｶﾞﾀﾄﾒﾜ 2	1
13		RE-0400000-K0	SNAP RING 4		Eｶﾞﾀﾄﾒﾜ 4	1
14	◇05	100-17309	NEEDLE POSITION ADJUSTING BASE	D.10/80	ﾊﾘｲﾁ ﾍﾝｺｰﾀﾞｲ	-
14-1	◇05	100-17317	NEEDLE POSITION ADJUSTING BASE	A.10/80	ﾊﾘｲﾁﾍﾝｶﾝﾀﾞｲ	1
15	◇05	100-17408	SPRING		ｲﾁｷﾒｷｭｰ ｵｼﾊﾞﾈ	1
16	◇05	B2608-761-000	HAND STOP CRANK SHAFT BALL		ｼｭﾄﾞｰﾃｰｼ ﾊﾝﾄﾞﾙ ｺｰｷｭｰ	1
17	◇05	100-17507	BASE MOUNTING PLATE		ﾊﾘｲﾁ ﾍﾝｺｰﾀﾞｲ ﾄﾘﾂｹｲﾀ	1
18	◇05	NS-6150310-SP	NUT 15/64-28		ﾛｯｶｸﾅｯﾄ 15/64-28	1
19	◇05	WP-1051416-SD	WASHER 10.5X17X1.4		ﾋﾗｻﾞｶﾞﾈ 10.5X17X1.4	1
20		WZ-1052010-KP	WAVED WASHER 10.5X14.5X0.3		ﾅﾐｶﾞﾀｻﾞｶﾞﾈ10.5X14.5X0.3	1
21		RE-0800000-K0	SNAP RING 8		Eｶﾞﾀﾄﾒﾜ 8	1
22		100-17606	OIL SHIELD		ｵｲﾙｼｰﾙ	1
23		SS-7111120-SP	SCREW 11/64-40 L=10.5		ﾏﾙﾋﾗﾈｼﾞ 11/64-40 L=10.5	4
24		100-12508	DRIVE LINK GUIDE B		ﾊﾘﾌﾘ ｸﾄﾞｰﾘﾝｸ ｱﾝﾅｲ B	1
25		100-12409	DRIVE LINK GUIDE A		ﾊﾘﾌﾘ ｸﾄﾞｰﾘﾝｸ ｱﾝﾅｲ A	1
26		SS-8150410-SP	SCREW 15/64-28 L=4		ﾄﾒﾈｼﾞ 15/64-28 L=4	1
27		SS-8150710-TP	SCREW 15/64-28 L=7		ﾄﾒﾈｼﾞ 15/64-28 L=7	1
28	◇05	100-15808	NEEDLE POSITION ADJUSTING LEVER		ﾊﾘｲﾁ ﾍﾝｺｰﾚﾊﾞｰ	1
28-1	◇05	WP-1021016-SD	WASHER 10.2X18X1	A.08/79	ﾋﾗｻﾞｶﾞﾈ 10.2X19X1	1
29	◇05	100-15907	LEVER STOPPER		ﾚﾊﾞｰ ｽﾄｯﾊﾟｰ	2
30	◇05	WP-0370316-SD	WASHER 3.7X8X0.3	D.08/79	ﾋﾗｻﾞｶﾞﾈ 3.7X8X0.3	-
30-1	◇05	WP-0371016-SD	WASHER 3.7X8X1	A.08/79	ﾋﾗｻﾞｶﾞﾈ 3.7X8X1	2
31	◇05	SS-7090320-SP	SCREW 9/64-40 L=3	D.08/79	SS-7090410-SP	-
	◇05	SS-7090410-SP	SCREW 9/64-40 L= 3.5	A.08/79	ﾏﾙﾋﾗﾈｼﾞ 9/64-40 L=3.5	2
32	◇05	100-15659	SCALE MOUNTING BASE ASM.		ﾌﾘﾊﾊﾞﾒﾓﾘ ﾄﾘﾂｹｲﾀ ｸﾐ	1
33	◇05	WZ-1052010-KP	WAVED WASHER 10.5X14.5X0.3	M.08/79	ﾅﾐｶﾞﾀｻﾞｶﾞﾈ10.5X14.5X0.3	3
34	◇01	100-15501	SCALE PLATE		ﾌﾘﾊﾊﾞﾒﾓﾘ	1
35	◇05	SS-6080320-SP	SCREW 1/8-44 L= 2.5		ﾋﾗﾈｼﾞ 1/8-44 L=2.5	2
36		100-15907	LEVER STOPPER	M.08/79	ﾚﾊﾞｰ ｽﾄｯﾊﾟｰ	1
36-1		100-17804	STOPPER	A.08/79	ﾌﾘﾊﾊﾞﾁｮｰｾﾂｽﾄｯﾊﾟｰ	1
37		SS-7090540-TP	SCREW 9/64-40 L=5	M.08/79	ﾏﾙﾋﾗﾈｼﾞ 9/64-40 L=5	1
37-1		SS-7090510-SP	SCREW 9/64-40 L= 4.6	A.08/79	ﾏﾙﾋﾗﾈｼﾞ 9/64-40 L=4.6	1
38		100-15253	LEVER ASM.		ﾁｮｰｾﾂｳﾃﾞ ｶﾄﾞｰﾚﾊﾞｰ ｸﾐ	1
39		SS-7090910-TP	SCREW 9/64-40 L= 8.5		ﾏﾙﾋﾗﾈｼﾞ 9/64-40 L=8.5	(1)
40		100-17705	SPRING		ﾁｮｰｾﾂｳﾃﾞ ｶﾄﾞｰﾚﾊﾞｰ ﾊﾞﾈ	1
41		100-15006	KNOB		ﾌﾘﾊﾊﾞ ﾁｮｰｾﾂﾂﾏﾐ	1
42		SS-7620750-SP	SCREW 3/16-32 L= 6.5		ﾏﾙﾋﾗﾈｼﾞ 3/16-32 L=6.5	1
43		100-15105	KEY		ﾌﾘﾊﾊﾞ ﾁｮｰｾﾂﾂﾏﾐ ｷｰ	1
44		NS-6660430-SP	NUT 1/4-40		ﾛｯｶｸﾅｯﾄ 1/4-40	2
45		WP-0650876-SD	WASHER 6.5X13X0.8		ﾋﾗｻﾞｶﾞﾈ 6.5X13X0.8	1
46		SS-7110910-TP	SCREW 11/64-40 L= 8.5		ﾏﾙﾋﾗﾈｼﾞ 11/64-40 L=8.5	1
47	◇03	100-11807	PIN		ﾊﾘﾌﾘ ﾛｯﾄﾞｼﾞｸ A	1
48		SS-9090610-TP	SCREW 9/64-40 L=5.5		ﾛｯｶｸﾎﾞﾙﾄ 9/64-40 L=5.5	2
49		100-13951	SHAFT CONNECTION ASM.		ﾊﾘﾎﾞｰ ｼｼﾞﾀﾞｲ ｼﾞｸﾀﾞｷ ｸﾐ	1
50		SS-9121410-TP	SCREW 3/16-28 L=14		ﾛｯｶｸﾎﾞﾙﾄ 3/16-28 L=14	(1)
51		WP-0500916-SD	WASHER 5X7X0.9		ﾋﾗｻﾞｶﾞﾈ 5X7X0.9	(1)
52		SS-7110910-TP	SCREW 11/64-40 L= 8.5		ﾏﾙﾋﾗﾈｼﾞ 11/64-40 L=8.5	1
53		100-12300	DRIVE LINK		ﾊﾘﾌﾘ ｸﾄﾞｰﾘﾝｸ	1
54	◇03	100-12607	PIN		ﾊﾘﾌﾘ ｸﾄﾞｰﾘﾝｸﾋﾟﾝ A	1
55		CS-1031210-SH	THRUST COLLAR ASM. D=10.32 W=12		ｽﾗｽﾄｳｹ D=10.32 W=12 ｸﾐ	1
56		SS-8660610-TP	SCREW 1/4-40 L=6		ﾄﾒﾈｼﾞ 1/4-40 L=6	(2)
57	◇01	100-11401	NEEDLE VIBRATING CAM		ﾊﾘﾌﾘｶﾑ	1
58	◇01	100-11708	NEEDLE VIBRATING ROD		ﾊﾘﾌﾘ ﾛｯﾄﾞ	1
59		100-12201	BUSHING		ﾊﾘﾌﾘ ﾛｯﾄﾞｼﾞｸｳｹ	1
60		100-16608	LINK		ﾌﾘﾊﾊﾞ ﾍﾝｶﾝﾘﾝｸ	1
61	◇03	100-16707	LINK SHAFT		ﾌﾘﾊﾊﾞ ﾍﾝｶﾝﾘﾝｸ ｼﾞｸ A	1
62	◇06	B1636-581-A00	NEEDLE BEARING		ﾆｰﾄﾞﾙ ﾍﾞｱﾘﾝｸﾞ A	1
63	◇01	100-11609	SIDE DISC PLATE		ﾊﾘﾌﾘｶﾑ ｶﾞｲﾄﾞ	1
64	◇01	SS-7111120-SP	SCREW 11/64-40 L=10.5		ﾏﾙﾋﾗﾈｼﾞ 11/64-40 L=10.5	1
65	◇01	CS-1031218-SH	THRUST COLLAR ASM. D=10.32 W=12		ｽﾗｽﾄｳｹ D=10.32 W=12 ｸﾐ	1
66	◇01	SS-8660610-TP	SCREW 1/4-40 L=6		ﾄﾒﾈｼﾞ 1/4-40 L=6	(1)
67	◇01	SS-8660970-TP	SCREW 1/4-40 L= 8.5		ﾄﾒﾈｼﾞ 1/4-40 L=8.5	(1)
68		SS-8660970-TP	SCREW 1/4-40 L= 8.5		ﾄﾒﾈｼﾞ 1/4-40 L=8.5	2
69		100-11500	SHAFT		ﾊﾘﾌﾘｶﾑｼﾞｸ	1
70		RO-0691801-00	RUBBER RING		ｺﾞﾑﾘﾝｸﾞ	1

Note(注記)◇01.....For LZ-1280 — LZ-1280用
◇03.....Selective part. — 選択部品
◇05.....For LZ-1280, LZ-1286 — LZ-1280、LZ-1286用
◇06.....Selective part for LZ-1280 — 選択部品（LZ-1280用）

From the library of: Superior Sewing Machine & Supply LLC

5. PRESSER BAR & FEED REGULATOR COMPONENTS

押工棒、送り調節器関係

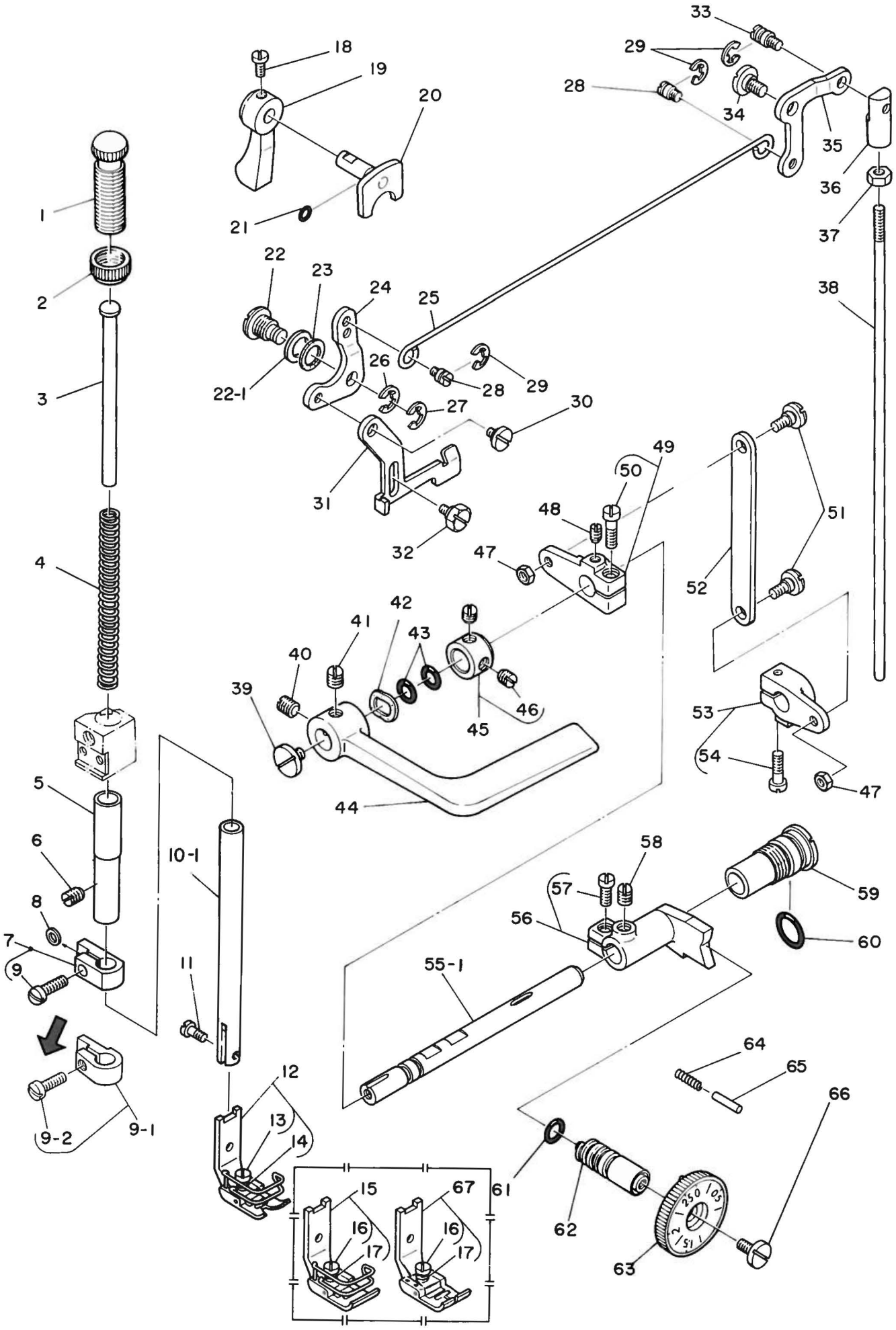

From the library of: Superior Sewing Machine & Supply LLC

Ref. No.	Note 注記	Part No. 品番	Description	E.C. 変更年月	品名	Amt. Req. 数量
1		B1509-227-000	PRESSER SPRING REGULATOR		ｵｻｴ ﾁｮｰｾﾂﾈｼﾞ	1
3		B1510-227-C00	PRESSER GUIDE BAR		ｵｻｴ ｱﾝﾅｲﾎﾞｰ	1
4		B1505-227-C00-A	PRESSER SPRING		ｵｻｴ ﾁｮｰｾﾂﾊﾞﾈ	1
5		100-22200	PRESSER BAR BUSHING		ｵｻｴﾎﾞｰ ﾒﾀﾙ	1
6		SS-8150710-SP	SCREW 15/64-28 L=7		ﾄﾒﾈｼﾞ 15/64-28 L=7	1
7	*	100-22358	PRESSER BAR GUIDE BRACKET ASM.	D.04/84	ｵｻｴﾎﾞｰﾀﾞｷ ｸﾐ	-
8	*	WP-0500916-SD	WASHER 5X7X0.9	D.04/84	ﾋﾗﾜｶﾞﾈ 5X7X0.9	-
9	*	SS-7121410-SP	SCREW 3/16-28 L=14	D.04/84	ﾏﾙﾋﾗﾈｼﾞ 3/16-28 L=14	-
9-1	*	100-22366	PRESSER BAR GUIDE BRACKET ASM.	A.04/84	ｵｻｴﾎﾞｳﾀﾞｷ ｸﾐ	1
9-2	*	SS-7111110-TP	SCREW 11/64-40 L=10.5	A.04/84	ﾏﾙﾋﾗﾈｼﾞ 11/64-40 L=10.5	(1)
10-1		100-22010	PRESSER BAR	A.08/79	ｵｻｴﾎﾞｰ	1
11		SS-609091C-TP	SCREW 9/64-40 L=9		ﾋﾗﾈｼﾞ 9/64-40 L=9	1
12	#01	100-19057	PRESSER FOOT ASM.		ｵｻｴ A ｸﾐ	1
13	#01	SS-6090810-SP	SCREW 9/64-40 L= 7.5		ﾋﾗﾈｼﾞ 9/64-40 L=7.5	(1)
14	#01	B1525-582-000	SPRING		ｵｻｴﾊﾞﾈ	(1)
15	#02	100-19156	PRESSER FOOT ASM.		ｵｻｴ B ｸﾐ	1
16	#02	SS-6090810-SP	SCREW 9/64-40 L= 7.5		ﾋﾗﾈｼﾞ 9/64-40 L=7.5	(1)
17	#02	B1525-582-000	SPRING		ｵｻｴﾊﾞﾈ	(1)
18		SS-7120910-SP	SCREW 3/16-28 L=9		ﾏﾙﾋﾗﾈｼﾞ 3/16-28 L=9	1
19		B1520-552-000	HAND LIFTER		ｵｻｴｱｹﾞ ﾚﾊﾞｰ	1
20		B1518-481-0A0	HAND LIFTER CAM ASM.		ｵｻｴｱｹﾞｶﾑ ｸﾐ	1
21		RO-0371801-00	RUBBER RING		Oﾘﾝｸﾞ	1
22		B1517-552-C00	HINGE PIN		ﾋｷｱｹﾞ ﾘﾝｸｼﾋﾟﾝ	1
22-1	*	WP-0740516-SP	WASHER 7.4X11.8X0.5	A.11/83	ﾋﾗﾜｶﾞﾈ 7.4X11.8X0.5	1
23		B3431-581-000	LIFTING LEVER GASKET		ﾊﾟｯｷﾝ	1
24		B1516-552-CC0	LIFTING LEVER LINK		ﾋｷｱｹﾞ ｲﾀ ﾘﾝｸ	1
25		100-22507	CONNECTING ROD, HORIZONTAL		ﾋｻﾞｱｹﾞ ﾖｺﾎﾞｰ	1
26		RE-0600000-KO	SNAP RING 6		Eﾀｲﾌﾟﾄﾒﾜ 6	1
27		B1523-226-000	SNAP RING		ﾄﾒﾜ B	1
28		B3416-552-000	CONNECTING ROD HINGE SCREW		ﾋｻﾞｱｹﾞ ﾖｺﾎﾞｰ ﾀﾞﾝﾈｼﾞ	2
29		RE-0500000-KO	SNAP RING 5		Eﾀｲﾌﾟﾄﾒﾜ 5	3
30		SD-0630301-SP	HINGE SCREW D=6.35 H=3		ﾀﾞﾝﾈｼﾞ D=6.35 H=3	1
31		100-22408	LIFTING LEVER		ﾋｷｱｹﾞｲﾀ	1
32		SD-0630275-SP	HINGE SCREW D= 6.35 H= 2.7		ﾀﾞﾝﾈｼﾞ D=6.35 H=2.7	1
33		B3418-555-000	SWIVEL SCREW		ﾂﾘﾎﾞｰﾀﾞﾙﾏ ﾄﾒﾈｼﾞ	1
34		SD-0720331-SP	HINGE SCREW D= 7.24 H= 3.3		ﾀﾞﾝﾈｼﾞ D=7.24 H=3.3	1
35		B3414-555-CC0	LIFTING LEVER LINK ARM		ﾋｻﾞｱｹﾞﾘﾝｸｳﾃﾞ	1
36		B3416-555-CC0	SWIVEL		ﾂﾘﾎﾞｰﾀﾞﾙﾏ	1
37		NS-6620310-SP	NUT 3/16-32		ﾛｯｶｸﾅｯﾄ 3/16-32	1
38		100-22606	CONNECTING ROD, VERTICAL		ﾋｻﾞｱｹﾞ ﾚﾝｸﾂﾎﾞｰ	1
39		SS-7620750-SP	SCREW 3/16-32 L= 6.5		ﾏﾙﾋﾗﾈｼﾞ 3/16-32 L=6.5	1
40	#05	SS-8660810-TP	SCREW 1/4-40 L=8		ﾄﾒﾈｼﾞ 1/4-40 L=8	1
41	#05	SS-8660970-TP	SCREW 1/4-40 L= 8.5		ﾄﾒﾈｼﾞ 1/4-40 L=8.5	1
42	#05	WZ-1052010-KP	WAVED WASHER 10.5X14.5X0.3		ﾅﾐｶﾞﾀﾜﾘｶﾞﾈ10.5X14.5X0.3	1
43		RO-0691801-00	RUBBER RING		Oﾘﾝｸﾞ	2
44	#05	100-28009	REVERSE FEED CONTROL LEVER		ｵｸﾘﾚﾊﾞｰ	1
45		CS-1031210-SH	THRUST COLLAR ASM. D=10.32 W=12		ｽﾗｽﾄｳｹ D=10.32 W=12 ｸﾐ	1
46		SS-8660610-TP	SCREW 1/4-40 L=6		ﾄﾒﾈｼﾞ 1/4-40 L=6	(2)
47		NS-6120310-SP	NUT 3/16-28		ﾛｯｶｸﾅｯﾄ 3/16-28	2
48		SS-8120740-SP	SCREW 3/16-28 L=7		ﾄﾒﾈｼﾞ 3/16-28 L=7	1
49		100-28561	FEED REVERSAL ARM ASM.		ｵｸﾘﾍﾝｶﾝｳﾃﾞ A ｸﾐ	1
50		SS-6121610-TP	SCREW 3/16-28 L=15.5		ﾋﾗﾈｼﾞ 3/16-28 L=15.5	(1)
51		SD-0600321-SP	HINGE SCREW D= 6 H= 3.2		ﾀﾞﾝﾈｼﾞ D=6 H=3.2	2
52		100-28603	FEED REVERSAL LINK		ｵｸﾘ ﾍﾝｶﾝﾘﾝｸ A	1
53		100-28959	FEED REVERSAL ARM ASM.		ｵｸﾘﾍﾝｶﾝｳﾃﾞ B ｸﾐ	1
54		SS-6121610-TP	SCREW 3/16-28 L=15.5		ﾋﾗﾈｼﾞ 3/16-28 L=15.5	(1)
55	#05	100-28108	SHAFT	D.09/81	ｵｸﾘﾚﾊﾞｰ ｼﾞｸ	-
55-1	#05	100-28116	SHAFT	A.09/81	ｵｸﾘﾚﾊﾞｰｼﾞｸ	1
56		100-28363	FEED REGULATOR ASM.		ｵｸﾘﾁｮｰｾﾂｷ ｸﾐ	1
57		SS-7111110-TP	SCREW 11/64-40 L=10.5		ﾏﾙﾋﾗﾈｼﾞ 11/64-40 L=10.5	(1)
58		SS-866C970-TP	SCREW 1/4-40 L= 8.5		ﾄﾒﾈｼﾞ 1/4-40 L=8.5	1
59		100-28207	SHAFT SUPPORT		ｵｸﾘﾚﾊﾞｰ ｼﾞｸｳｹ	1
60		RO-1372301-00	RUBBER RING		Oﾘﾝｸﾞ	1
61		RO-0742401-00	RUBBER RING		Oﾘﾝｸﾞ	1
62		100-28405	FEED REGULATOR SCREW		ｵｸﾘ ﾁｮｰｾﾂﾈｼﾞ	1
63		100-29452	STITCH DIAL ASM.		ﾒﾓﾘｲﾀ ｸﾐ	1
64		91148-555-000	SPRING		ｵｸﾘ ﾁｮｰｾﾂ ﾋﾟﾝﾊﾞﾈ	1
65		B1147-555-CC0	PIN		ｵｸﾘ ﾁｮｰｾﾂ ﾋﾟﾝ	1
66		SS-6121030-SP	SCREW 3/16-28 L=10		ﾋﾗﾈｼﾞ 3/16-28 L=10	1
67	#09	100-19354	PRESSER FOOT ASM.	A.01/85	ｵｻｴ ｸﾐ	1

Note(注記) #01.....For LZ-1280 LZ-1280用

#02.....For LZ-1280B LZ-1280B用

(For attaching elastic tapes.) (ゴムテープ付け用)

#05.....For LZ-1280,LZ-1286 LZ-1280,LZ-1286用

#09.....Special order part 特別注文部品

From the library of: Superior Sewing Machine & Supply LLC

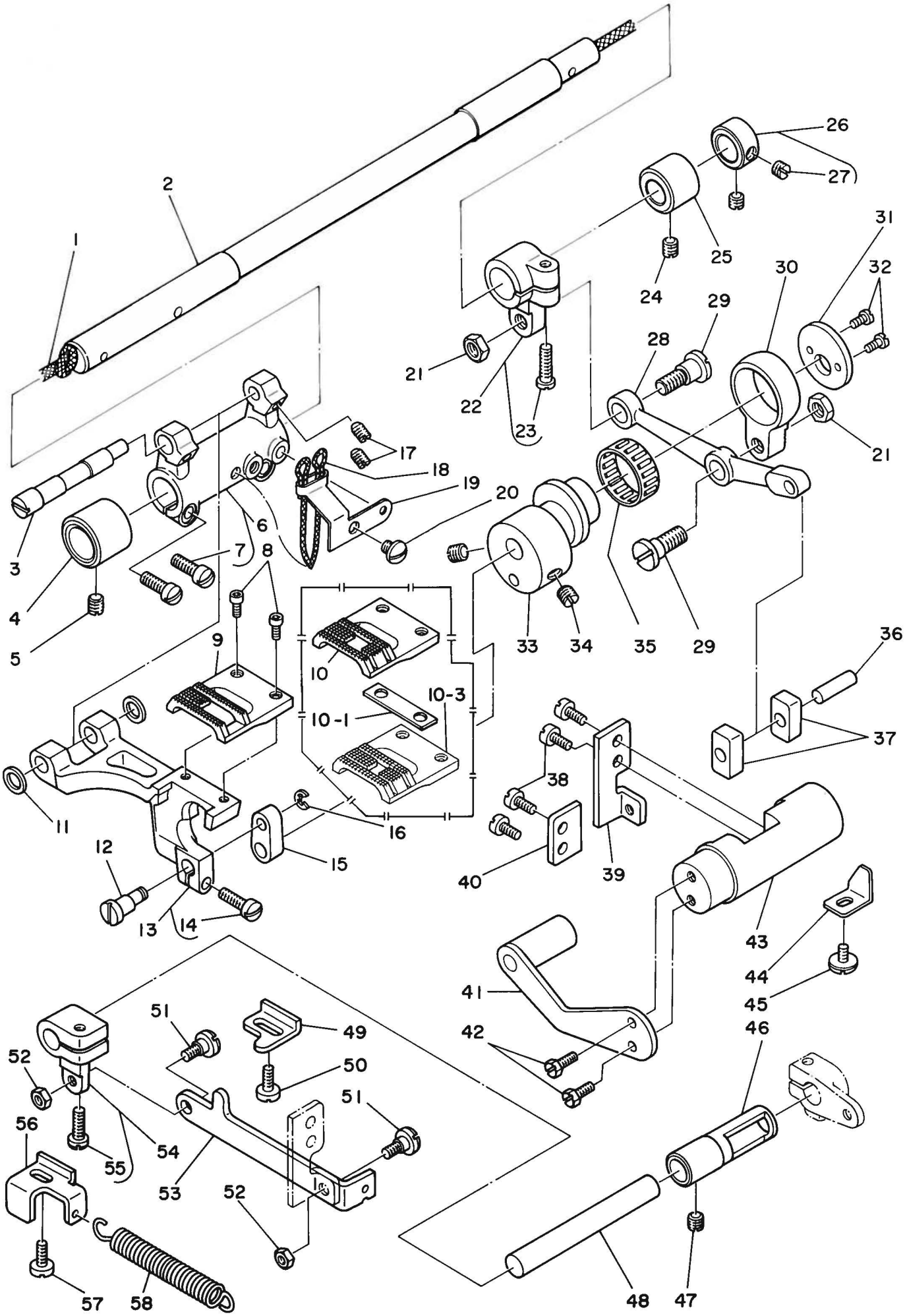

From the library of: Superior Sewing Machine & Supply LLC

Ref. No.	Note 注記	Part No. 品番	Description	E.C. 変更年月	品名	Amt. Req. 数量
1		CQ-5050000-00	OIL WICK		ｴｼﾝ	0.4
2		100-26607	FEED ROCKER SHAFT		ｽｲﾍｲ ｵｸﾘｼﾞｸ	1
3		100-26102	ECCENTRIC SHAFT		ｵｸﾘﾀﾞｲｼﾞｸ	1
4		B1702-155-CC0	BUSHING, REAR		ｵｸﾘｼﾞｸ ﾒﾀﾙ	1
5		SS-815C710-SP	SCREW 15/64-28 L=7		ﾄﾒﾈｼﾞ 15/64-28 L=7	1
6		100-26359	FEED ROCKER ASM.		ｵｸﾘﾀﾞｲｳﾃﾞ ｸﾐ	1
7		SS-7121410-SP	SCREW 3/16-28 L=14		ﾏﾙﾋﾗﾈｼﾞ 3/16-28 L=14	(2)
8		SS-6580752-TP	SCREW 1/8-40 L=7		ﾛｯｶｸｱﾅﾎﾞﾙﾄ 1/8-40 L=6.3	2
9	#01	100-24008	FEED DOG A		ｵｸﾘﾊﾞ A	1
10	#02	100-24107	FEED DOG B		ｵｸﾘﾊﾞ B	1
10-1	#09	100-25906	SPACER	A.10/80	ｵｸﾘﾀﾞｲｽﾍﾟｰｻ	1
10-2	#10	100-24305	FEED DOG C	A.07/81	ｵｸﾘﾊﾞ C	1
10-3	#09	100-24701	FEED DOG D	A.12/84	ｵｸﾘﾊﾞ	1
11		100-26201	SPACER		ｵｸﾘﾀﾞｲｼﾞｸ ｽﾍﾟｰｻ	2
12		100-26508	LINK PIN		ｼﾞﾖｰｹﾞｵｸﾘ ﾘﾝｸｼﾞｸ	1
13		100-26060	FEED BAR ASM.		ｵｸﾘﾀﾞｲ ｸﾐ	1
14		SS-7121410-SP	SCREW 3/16-28 L=14		ﾏﾙﾋﾗﾈｼﾞ 3/16-28 L=14	(1)
15		100-26409	LINK		ｼﾞﾖｰｹﾞｵｸﾘ ﾘﾝｸ	1
16		RE-0300000-K0	SNAP RING 3		Eﾋﾟﾀﾄﾒﾜ 3	1
17		SS-8120740-SP	SCREW 3/16-28 L=7		ﾄﾒﾈｼﾞ 3/16-28 L=7	2
18		CQ-2020000-C0	OIL WICK		ｴｼﾝ	0.2
19		100-37208	OIL WICK HOLDER		ｵｸﾘﾀﾞｲｳﾃﾞ ｴｼﾝｵｻｴ	1
20		SS-3120540-SP	SCREW 3/16-28 L=5.4		ﾏﾙﾈｼﾞ 3/16-28 L=5.4	1
21		NS-6680410-SP	NUT 9/32-28		ﾛｯｶｸﾅｯﾄ 9/32-28	2
22		10C-27159	FEED ROCKER SHAFT CRANK ASM.		ｽｲﾍｲｵｸﾘｳﾃﾞ ｸﾐ	1
23		SS-6121610-TP	SCREW 3/16-28 L=15.5		ﾋﾗﾈｼﾞ 3/16-28 L=15.5	(1)
24		SS-8150710-SP	SCREW 15/64-28 L=7		ﾄﾒﾈｼﾞ 15/64-28 L=7	1
25		B1604-155-CC0	FEED ROCKER SHAFT BUSHING, FRONT		ｵｸﾘｼﾞｸ ﾏｴﾒﾀﾙ	1
26		CS-111101D-SH	THRUST COLLAR ASM. D=11.11 W=10		ｽﾗｽﾄｶｳﾗ D=11.11 W=10 ｸﾐ	1
27		SS-8660530-TP	SCREW 1/4-40 L= 4.5		ﾄﾒﾈｼﾞ 1/4-40 L=4.5	(2)
28		10C-27C01	CONNECTING ROD		ｽｲﾍｲｵｸﾘ ﾚﾝｹﾂｶﾝ	1
29		SD-0900701-TP	HINGE SCREW D= 9 H= 7		ﾀﾞﾝﾈｼﾞ D=9 N=7	2
30		100-26805	ROD		ｽｲﾍｲｵｸﾘ ﾛｯﾄﾞ	1
31		10C-26904	SIDE DISC PLATE		ｽｲﾍｲｵｸﾘ ｶﾑ ﾌﾀ	1
32		SS-608C710-SP	SCREW 1/8-44 L= 6.5		ﾋﾗﾈｼﾞ 1/8-44 L=6.5	2
33		100-26706	ECCENTRIC CAM		ｽｲﾍｲ ｵｸﾘｶﾑ	1
34		SS-866C610-TP	SCREW 1/4-40 L=6		ﾄﾒﾈｼﾞ 1/4-40 L=6	2
35	#03	B16C9-RC4-AC0	BUSHING		ｵｸﾘ ﾍﾞｱﾘﾝｸﾞ	1
36		B1653-470-000	PIN		ｶｸｺﾞﾏﾋﾟﾝ	1
37		10C-29601	FEED DRIVING ROCKER BLOCK		ｵｸﾘﾃﾖｰｾﾂﾀｲ ｶｸｺﾞﾏ	2
38		SS-6111C10-SP	SCREW 11/64-4C L= 9.5		ﾋﾗﾈｼﾞ 11/64-4C L=9.5	4
39		10C-27407	PLATE B		ｵｸﾘ ﾁﾐｰｾﾂﾀｲ ﾌﾟﾚｰﾄ B	1
40		10C-27308	PLATE A		ｵｸﾘ ﾁﾐｰｾﾂﾀｲ ﾌﾟﾚｰﾄ A	1
41	#05	10C-27654	BALANCE WEIGHT ASM.		ﾁﾖｰｾﾂﾀｲ ﾂﾘｱｲｵﾓﾘ ｸﾐ	1
42	#05	SS-9111020-TP	SCREW 11/64-4C L=10		ﾛｯｶｸﾎﾞﾙﾄ 11/64-40 L=10	2
43		100-27209	FEED DRIVING ROCKER		ｵｸﾘ ﾁﾐｰｾﾂﾀｲ	1
44		100-27506	STOPPER PLATE		ｵｸﾘ ﾁﾐｰｾﾂﾀｲ ｵｻｴ	1
45		SS-5110710-SP	SCREW 11/64-40 L=7		ﾄﾗｽﾈｼﾞ 11/64-40 L=7	1
46		100-28801	BUSHING		ｵｸﾘ ﾍﾝｶﾝｼﾞｸ ﾒﾀﾙ	1
47		SS-8150710-SP	SCREW 15/64-28 L=7	D.11/80	SS-8150510-TP	-
		SS-8150510-TP	SCREW 15/64-28 L= 4.7	A.11/80	ﾄﾒﾈｼﾞ 15/64-28 L=4.7	1
48		10C-28702	FEED VARIABLE SHAFT		ｵｸﾘ ﾍﾝｶﾝｼﾞｸ	1
49	#05	100-29304	REVERSE FEED LIMITER		ｷﾞｬｸｵｸﾘﾘﾖｰ ｷｾｲﾅﾌｸﾞ	1
50	#05	SS-6111140-SP	SCREW 11/64-40 L=11		ﾋﾗﾈｼﾞ 11/64-4C L=11	1
51		SD-0600321-SP	HINGE SCREW D= 6 H= 3.2		ﾀﾞﾝﾈｼﾞ D=6 H=3.2	2
52		NS-612C310-SP	NUT 3/16-28		ﾛｯｶｸﾅｯﾄ 3/16-28	2
53		100-29106	FEED REVERSAL LINK		ｵｸﾘ ﾍﾝｶﾝﾘﾝｸ B	1
54		100-29C64	FEED REVERSAL ARM ASM.		ｵｸﾘﾍﾝｶﾝｳﾃﾞ C ｸﾐ	1
55		SS-7121410-SP	SCREW 3/16-28 L=14		ﾏﾙﾋﾗﾈｼﾞ 3/16-28 L=14	(1)
56		10C-29205	SPRING SUSPENSION BRACKET		ﾋｯﾊﾟﾘﾊﾞﾈｶｹ	1
57		SS-6111140-SP	SCREW 11/64-40 L=11		ﾋﾗﾈｼﾞ 11/64-4C L=11	1
58		B1646-555-CC0	TENSION SPRING		ﾋｯﾊﾟﾘ ﾊﾞﾈ	1

Note(注記)

#01.....For LZ-1280	LZ-1280用
#02.....For LZ-1280B	LZ-1280B用
(For attaching elastic tapes.)	(ゴムテープ付け用)
#03.....For Selective part	選択部品
#05.....For LZ-1280,LZ-1286	LZ-1280,LZ-1286用
#09.....Special order part	特別注文部品
#10.....For LZ-1280B	LZ-1280B用
(For attaching elastic tapes.)	(ゴムテープ付け用)
(for pulling amount 2mm Max.)	(送り量最大2mm用)

From the library of: Superior Sewing Machine & Supply LLC

7. HOOK DRIVING SHAFT & HOOK COMPONENTS

下軸、釜関係

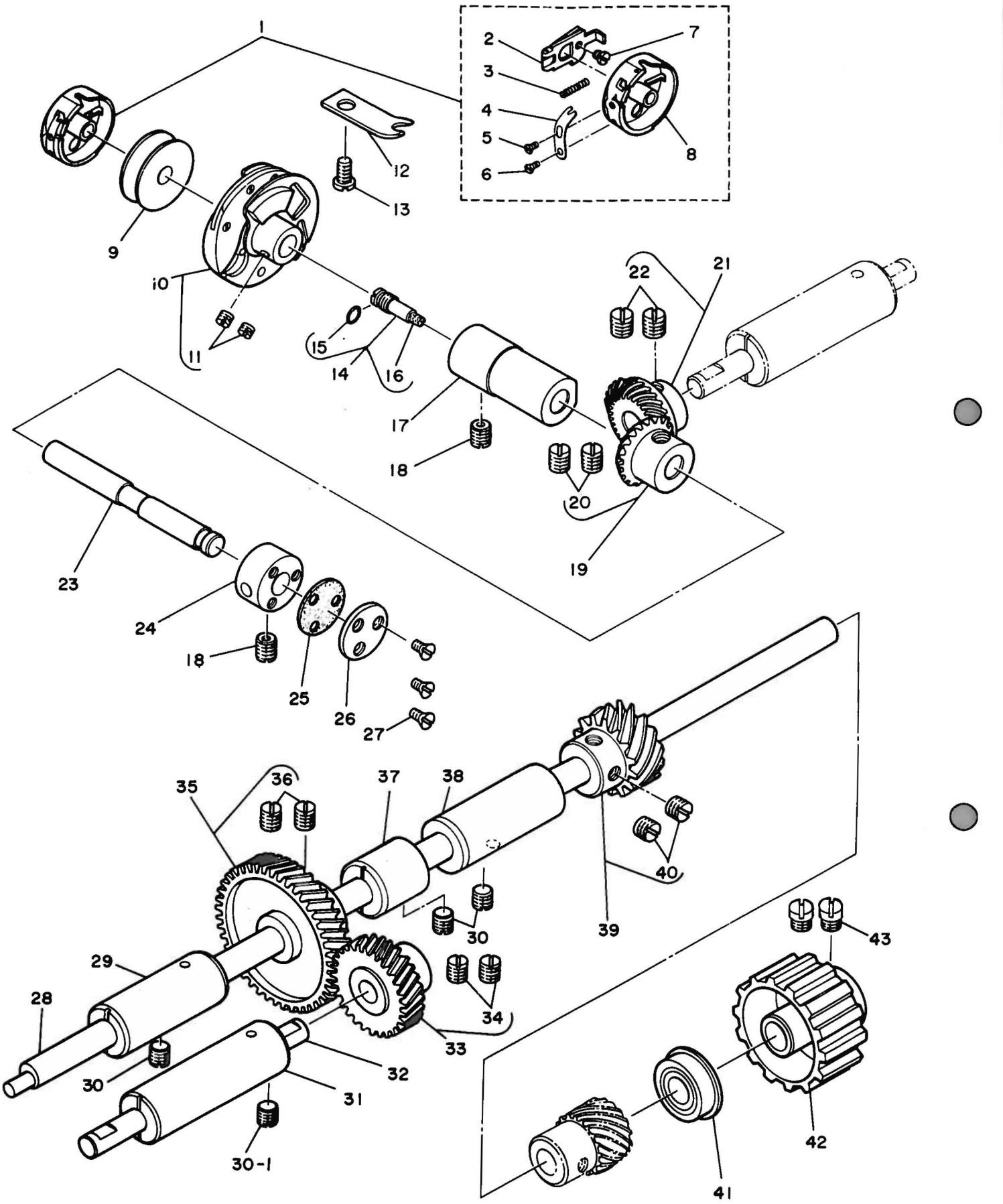

From the library of: Superior Sewing Machine & Supply LLC

Ref. No.	Note 注記	Part No. 品番	Description	E. C. 変更年月	品名	Amt. Req. 数量
1		100-34056	BOBBIN CASE ASM.		ﾎﾞﾋﾞﾝｹｰｽ ｸﾐ	1
2		100-34254	BOBBIN CASE LATCH LEVER ASM.		ﾗﾂﾁﾚﾊﾞｰ ｸﾐ	(1)
3		B1810-761-F00	LATCH SPRING		ﾗﾂﾁ ｽﾌﾟﾘﾝｸﾞ	(1)
4		100-34106	BOBBIN CASE TENSION SPRING		ﾁｮｰｼﾊﾞﾈ	(1)
5		B1810-761-J00	TENSION SCREW		ﾁｮｰｼ ﾈｼﾞ	(1)
6		B1810-761-H00	CLAMP SCREW		ﾁｮｰｼﾊﾞﾈ ﾄﾒﾈｼﾞ	(1)
7		B1810-761-G00-A	STOPPER SCREW		ﾗﾁｪｯﾄｽﾄｯﾊﾟｰﾈｼﾞ	(1)
8		100-34007	BOBBIN CASE		ﾎﾞﾋﾞﾝｹｰｽ	(1)
9		B1809-761-000	BOBBIN		ﾎﾞﾋﾞﾝ	1
10		100-32555	HOOK ASM.		ｶﾏ ｸﾐ	1
11		SS-8110422-TP	SCREW 11/64-40 L=4		ﾄﾒﾈｼﾞ 11/64-40 L=4	(2)
12		100-33207	BOBBIN CASE POSITIONING FINGER		ｳﾁｶﾞﾏﾄﾒ	1
13		SS-6111010-SP	SCREW 11/64-40 L= 9.5		ﾋﾗﾈｼﾞ 11/64-40 L= 9.5	1
14		B1808-552-0B0	PIN ASM.		ｶﾏｼﾞｸｼｼﾝ ｿｰﾆｰﾈｼﾞ ｸﾐ	1
15		RO-0360802-00	RUBBER RING		Oﾘﾝｸﾞ	(1)
16		B1810-552-000	OIL WICK		ｼﾀｼﾞｸ ﾏｴ ﾄﾒﾈｼﾞ ｼｼﾝ	(1)
17		100-31409	HOOK SHAFT BUSHING		ｶﾏｼﾞｸﾒﾀﾙ A	1
18		SS-8150710-SP	SCREW 15/64-28 L=7		ﾄﾒﾈｼﾞ 15/64-28 L=7	2
19		B1308-155-0A0	PINION ASM.		ｶｻﾊｸﾞﾙﾏ ｼﾖｰ ｸﾐ	1
20		SS-8660810-TP	SCREW 1/4-40 L=8		ﾄﾒﾈｼﾞ 1/4-40 L=8	(2)
21		B1307-155-0A0	GEAR ASM. LARGE		ｼﾀｶｻﾊｸﾞﾙﾏ ﾀﾞｲ ｸﾐ	1
22		SS-8660810-TP	SCREW 1/4-40 L=8		ﾄﾒﾈｼﾞ 1/4-40 L=8	(2)
23		100-31300	HOOK SHAFT		ｶﾏｼﾞｸ	1
24		100-31508	HOOK SHAFT BUSHING		ｶﾏｼﾞｸﾒﾀﾙ B	1
25		100-31706	GASKET		ｶﾏｼﾞｸﾒﾀﾙ B ﾊﾟｯｷﾝ	1
26		100-31607	BUSHING CAP		ｶﾏｼﾞｸﾒﾀﾙ ﾌﾀ	1
27		SS-1080620-SP	SCREW 1/8-44 L=6		ｻﾗﾈｼﾞ 1/8-44 L= 6	3
28		100-30005	HOOK DRIVING SHAFT		ｼﾀｼﾞｸ	1
29		100-30104	BUSHING, FRONT		ｼﾀｼﾞｸ ﾏｴﾒﾀﾙ	1
30		SS-8150710-SP	SCREW 15/64-28 L=7	D.11/80	SS-8150750-SP	-
30-1		SS-8150750-SP	SCREW 15/64-28 L=7	A.11/80	ﾄﾒﾈｼﾞ 15/64-28 L=7	3
		SS-8151150-SP	SCREW 15/64-28 L=10.5	A.11/80	ﾄﾒﾈｼﾞ 15/64-28 L=10.5	1
31		100-31201	BUSHING		ｶﾏ ｸﾄﾞｰﾒﾀﾙ	1
32		100-31102	SHAFT		ｶﾏ ｸﾄﾞｰｼﾞｸ	1
33		100-31052	HELICAL GEAR ASM.		ｶﾏｸﾄﾞｰﾊｸﾞﾙﾏ B ｸﾐ	1
34		SS-8660810-TP	SCREW 1/4-40 L=8		ﾄﾒﾈｼﾞ 1/4-40 L=8	(2)
35	◇03	100-30658	HELICAL GEAR ASM.		ｶﾏｸﾄﾞｰﾊｸﾞﾙﾏ A ｸﾐ	1
36	◇03	SS-8660810-TP	SCREW 1/4-40 L=8		ﾄﾒﾈｼﾞ 1/4-40 L=8	(2)
37		100-30203	BUSHING, INTERMEDIATE		ｼﾀｼﾞｸ ﾅｶﾒﾀﾙ	1
38		100-30302	BUSHING, REAR		ｼﾀｼﾞｸ ｳｼﾛﾒﾀﾙ	1
39	◇06	100-11054	SCREW GEAR ASM.		ﾊﾘﾌﾘｶﾑ ﾊｸﾞﾙﾏ A ｸﾐ	1
40	◇06	SS-8660610-TP	SCREW 1/4-40 L=6		ﾄﾒﾈｼﾞ 1/4-40 L=6	(2)
41		SB-1095301-00	BEARING D=9.52X22.22		ﾎﾞｰﾙﾍﾞｱﾘﾝｸﾞ D=9.52X22.22	1
42		100-30401	HOOK DRIVING SHAFT SPROCKET		ｼﾀｼﾞｸ ｽﾌﾟﾛｹｯﾄ	1
43		SS-8660610-TP	SCREW 1/4-40 L=6	D.11/80	SS-6660710-TP	-
		SS-6660710-TP	SCREW 1/4-40 L=7	A.11/80	ﾋﾗﾈｼﾞ 1/4-40 L= 7	2

Note(注記)◇03.....Selective part. 選択部品

◇06.....Selective part for LZ-1280 選択部品(LZ-1280用)

From the library of: Superior Sewing Machine & Supply LLC

8. LUBRICATION COMPONENTS

給油関係

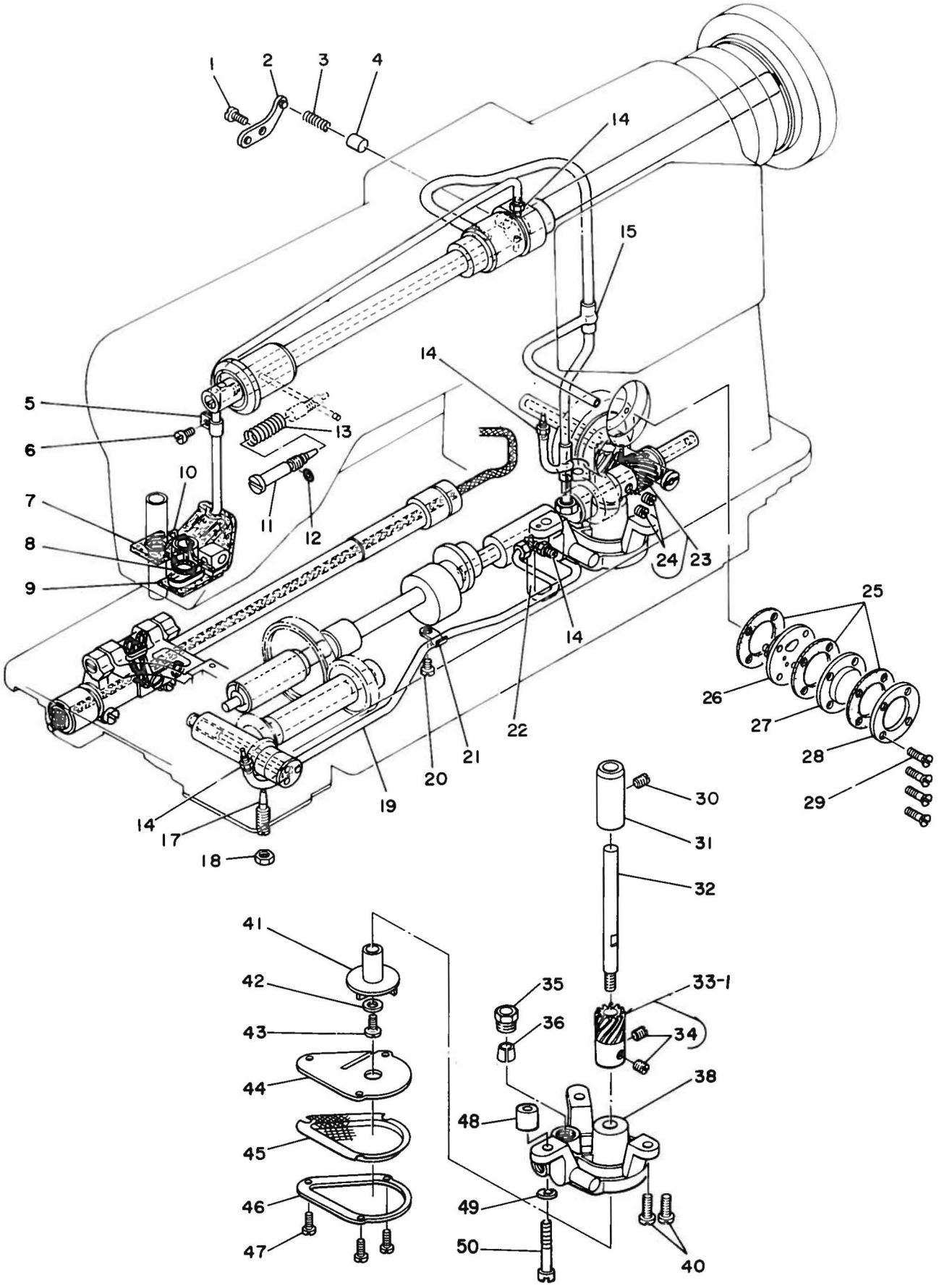

From the library of: Superior Sewing Machine & Supply LLC

Ref. No.	Note 注記	Part No. 品番	Description	E.C. 変更年月	品名	Amt. Req. 数量
1	*	SS-7110910-SP	SCREW	D.11/83	SS-4110715-SP	-
	*	SS-4110715-SP	SCREW 11/64-4C L=7	A.11/83	ﾅﾍﾞﾈｼﾞ 11/64-40 L=7	1
2		B3524-552-000	PLUNGER THRUST PLATE		ﾌﾟﾗﾝｼﾞｬｰ ｵｻｴｶﾅｸﾞ	1
3		B1214-038-000	PLUNGER SPRING		ﾌﾟﾗﾝｼﾞｬｰ ｵｻｴﾊﾞﾈ	1
4		B3534-155-C00	PLUNGER		ﾌﾟﾗﾝｼﾞｬｰ	1
5		B3536-122-000	OIL TUBE HOLDER		ｷｭｰﾚ ﾊﾟｲﾌﾟｵｻｴ	1
6		SS-711C710-SP	SCREW 11/64-40 L=7		ﾏﾙﾋﾗﾈｼﾞ 11/64-40 L=7	1
7		10C-35863	FELT ASM.		ｶﾝﾘｭｰﾌｪﾙﾄ A ｸﾐ	1
8		CQ-2020000-C0	OIL WICK		ｽﾖﾝ	0.1
9		100-36002	FELT		ｶﾝﾘｭｰ ﾌｪﾙﾄ B	1
10		10C-35905	FELT PRESSER		ｶﾝﾘｭｰ ﾌｪﾙﾄｵｻｴ	1
11		10C-35707	OIL REGULATING SCREW		ﾒﾝﾌﾟ ﾕﾘｮｰ ﾁｮｰｾﾂﾈｼﾞ	1
12		R0-0291801-C0	RUBBER RING		Oﾘﾝｸﾞ	1
13		B2616-372-CC0	SPRING		ﾊﾞﾈ	1
14		SQ-1110402-PZ	CONNECTING SCREW	M.08/79	ﾁｭｰﾌﾞﾚﾝｹﾂﾈｼﾞ	4
15		100-35459	OIL SUPPLY PIPE ASM.		ｳﾜｼﾞｸ ｷｭｰﾕﾊﾟｲﾌﾟ ｸﾐ	1
17		10C-37109	OIL REGULATING SCREW		ｶﾏﾕﾘｮｰ ﾁｮｰｾﾂﾈｼﾞ	1
18		NS-615C310-SP	NUT 15/64-28		ﾛﾝｶｸﾅｯﾄ 15/64-28	1
19		BP-3000000-C0	VINYL TUBE, WHITE D=3	M.11/79	ﾋﾞﾆｰﾙﾊﾟｲﾌﾟ	0.5
20		SS-711C510-SP	SCREW 11/64-40 L=5		ﾏﾙﾋﾗﾈｼﾞ 11/64-40 L= 5	1
21		B3538-112-CC0	CORD HOLDER		ｵｻｴｶﾅｸﾞ	1
22		10C-37059	OIL SUPPLY PIPE ASM.		ｼﾀｼﾞｸ ｷｭｰﾕﾊﾟｲﾌﾟ ｸﾐ	1
23		100-35053	PUMP DRIVING GEAR ASM.		ﾎﾟﾝﾌﾟｸﾄﾞﾗｲﾊﾞｰﾙﾏ A ｸﾐ	1
24		SS-8660530-TP	SCREW 1/4-40 L= 4.5		ﾄﾒﾈｼﾞ 1/4-40 L=4.5	(2)
25		B3516-552-C00	GASKET		ｱﾌﾟﾗ ﾉｿﾞｷﾏﾄﾞ ﾊﾟｯｷﾝ	3
26		B3531-552-CA0	BASE ASM.		ｱﾌﾟﾗ ﾉｿﾞｷﾀﾞｲ ｸﾐ	1
27		B3513-352-CC0	OIL SIGHT WINDOW		ｱﾌﾟﾗ ﾉｿﾞｷﾏﾄﾞ	1
28		B3514-552-CC0	PRESSER		ｱﾌﾟﾗ ﾉｿﾞｷﾏﾄﾞ ｵｻｴ	1
29		SS-2091520-SP	SCREW 9/64-40 L=14.7		ﾏﾙｻﾗﾈｼﾞ 9/64-40 L=14.7	4
30		SS-8150710-SP	SCREW 15/64-28 L=7		ﾄﾒﾈｼﾞ 15/64-28 L=7	1
31		100-35301	BUSHING		ﾎﾟﾝﾌﾟ ｸﾄﾞﾗｲｼﾞｸﾒﾙ	1
32		100-352C2	PUMP DRIVING SHAFT		ﾎﾟﾝﾌﾟ ｸﾄﾞﾗｲｼﾞｸ	1
33-1		100-35160	PUMP DRIVING GEAR ASM. L=34	A.08/79	ﾎﾟﾝﾌﾟｸﾄﾞﾗｲﾊﾞｰﾙﾏ L=34 ｸﾐ	1
34		SS-866C530-TP	SCREW 1/4-40 L= 4.5	A.08/79	ﾄﾒﾈｼﾞ 1/4-40 L=4.5	(2)
35		B3512-122-000	OIL TUBE CLAMPING SCREW		ﾊﾟｲﾌﾟ ｺﾃｲﾈｼﾞ	1
36		B3511-122-0C0	OIL TUBE CLAMPING SLEEVE		ﾊﾟｲﾌﾟ ｺﾃｲﾌﾞｼｭ	1
38		B3501-552-0A0	OIL PUMP ASM.		ｷｭｰﾚ ﾎﾟﾝﾌﾟﾀｲ ｸﾐ	1
40		SS-6111140-SP	SCREW 11/64-40 L=11	M.03/81	ﾋﾗﾈｼﾞ 11/64-40 L=11	2
41		B3507-155-000	OIL PUMP INPELLER		ｶｲﾃﾝｼﾞｸ	1
42		WP-0550800-SP	WASHER 5.5X1CX0.8		ﾋﾗﾜｶﾞﾈ 5.5X1CX0.8	1
43		SS-6081010-TP	SCREW 1/8-44 L=1C		ﾋﾗﾈｼﾞ 1/8-44 L=10	1
44		B3502-122-0C0	OIL PUMP COVER		ｷｭｰﾚ ﾎﾟﾝﾌﾟ ﾌﾀ	1
45		B3504-155-000	FILTER SCREEN		ﾛｶｱﾐ	1
46		B3503-122-0C0	OIL PUMP FRAME		ｷｭｰﾚ ﾎﾟﾝﾌﾟﾜｸ A	1
47		SS-6081210-SP	SCREW 1/8-44 L=12		ﾋﾗﾈｼﾞ 1/8-44 L=12	3
48		B3552-481-000	OIL PUMP INSTALLING COLLAR	A.03/81	ﾎﾟﾝﾌﾟﾀｲ ｶﾗｰ	1
49		WP-0450000-S0	WASHER 4.5X8X0.5	A.03/81	ﾋﾗﾜｶﾞﾈ 4.5X8X0.5	1
50		SS-7113110-SP	SCREW 11/64-4C L=31	A.03/81	ﾏﾙﾋﾗﾈｼﾞ 11/64-40 L=30	1

From the library of: Superior Sewing Machine & Supply LLC

9. OIL RESERVOIR & KNEE LIFTER COMPONENTS

油溜、膝上ゲ関係

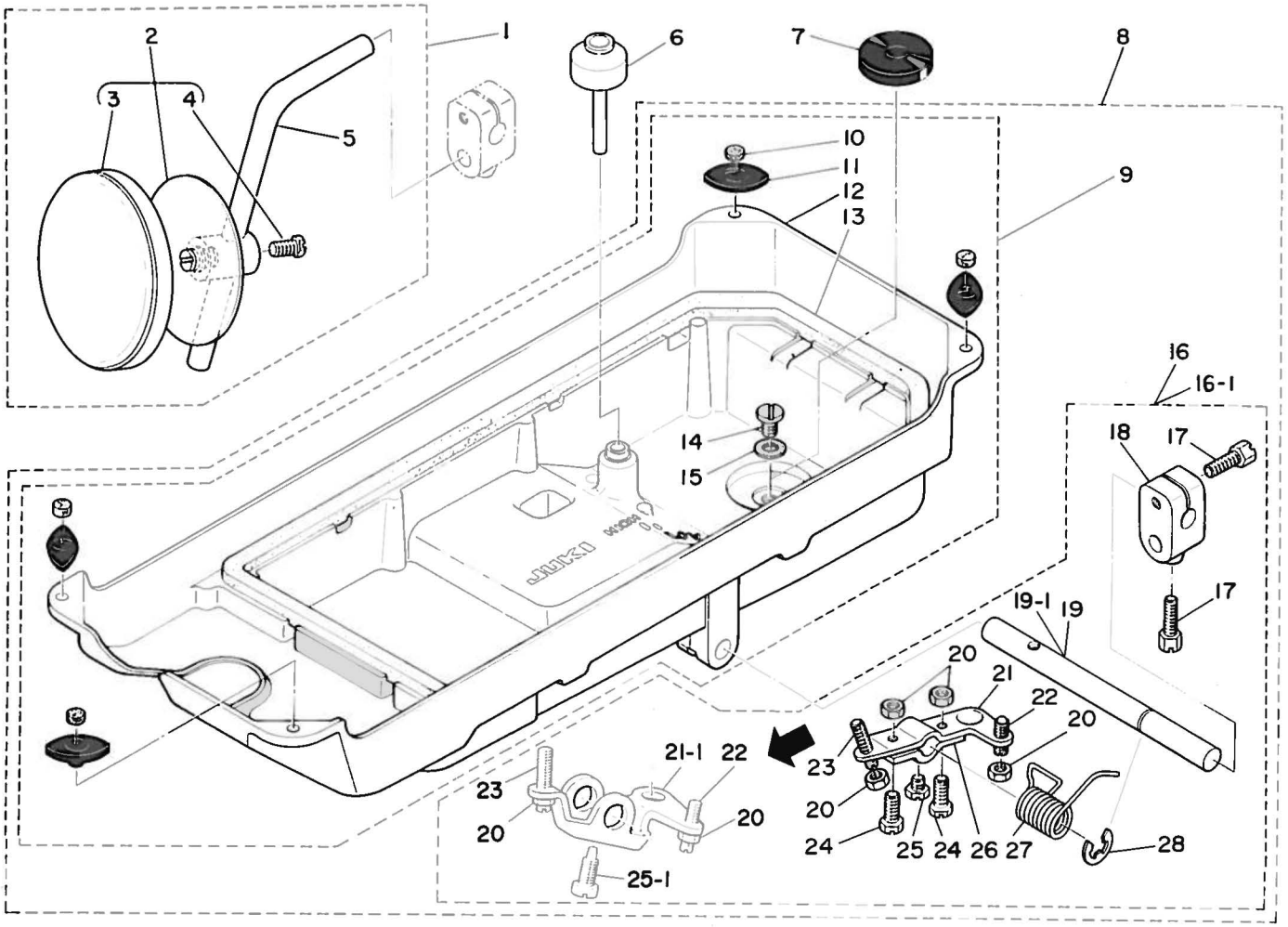

Ref. No.	Note 注記	Part No. 品番	Description	E. C. 変更年月	品名	Amt. Req. 数量
1		B3419-552-0A0-A	KNEE LIFTER PLATE ROD ASM.		ﾋｻﾞｱﾃ ﾀﾃｼﾞｸ ｸﾐ	1
2		B3430-552-0A0	KNEE PRESS PLATE ASM.		ﾋｻﾞｱﾃｲﾀ ｸﾐ	(1)
3		B3431-552-000-A	KNEE PRESS PLATE COVER		ﾋｻﾞｱﾃｲﾀ ｶﾊﾞｰ	(1)
4		SS-9661120-CP	SCREW 1/4-40 L=10.5		ﾛｯｶｸﾎﾞﾙﾄ 1/4-40 L=10.5	(1)
5		B3419-122-000	KNEE LIFTER PLATE ROD		ﾋｻﾞｱﾃ ﾀﾃｼﾞｸ	(1)
6		B3421-555-000	KNEE PRESS LIFTER ROD		ﾋｻﾞｱｹﾞｵｼﾎﾞｰ	1
7		B8228-125-000	OIL RESERVOIR MAGNET		ｼﾞｼｬｸ	1
8		100-38057	OIL RESERVOIR ASM.		ｱﾌﾞﾗﾀﾞﾒ ｸﾐ	1
9		100-38065	OIL RESERVOIR ASM.		ｱﾌﾞﾗﾀﾞﾒﾏﾘ ｸﾐ	(1)
10		B8227-125-CC0	FELT CUSHION		ﾄｰﾌﾞ ｸｯｼｮﾝ	(4)
11		B8226-125-CC0	RUBBER CUSHION		ﾄｰﾌﾞ ｻｻｴｺﾞﾑ	(4)
12		100-38008	OIL RESERVOIR		ｱﾌﾞﾗﾀﾞﾒ	(1)
13		100-38107	OIL RESERVOIR GASKET		ｱﾌﾞﾗﾀﾞﾒ ﾊﾟｯｷﾝ	(1)
14		SS-6741010-SP	SCREW 3/8-28 L=1C		ﾋﾗﾈｼﾞ 3/8-28 L=10	(1)
15		B8219-125-000	OIL DRAIN CAP GASKET		ﾊｲｱﾅﾌﾀ ﾊﾟｯｷﾝ	(1)
16	*	B3420-552-0A0-A	KNEE PRESS ROD ASM.	D.06/83	ﾋｻﾞｱﾃ ﾖｺｼﾞｸ ｸﾐ	-
16-1	*	B3420-555-0A0	KNEE PRESS ROD ASM.	A.06/83	ﾋｻﾞｱﾃﾖｺｼﾞｸ ｸﾐ	(1)
17		SS-9182010-SN	SCREW 9/32-20 L=20		ﾛｯｶｸﾎﾞﾙﾄ 9/32-20 L=20	(2)
18		B3427-122-000	KNEE PRESS ROD MOUNTING BRACKET		ﾋｻﾞｱﾃ ﾀﾃｼﾞｸ ﾄﾘﾂｹｳﾃﾞ	(1)
19	*	B3420-552-0C0	KNEE PRESS ROD	D.06/83	ﾋｻﾞｱﾃ ﾖｺｼﾞｸ	-
19-1	*	B3420-555-000	KNEE PRESS ROD	A.06/83	ﾋｻﾞｱﾃﾖｺｼﾞｸ	(1)
20	*	NS-6150430-SR	NUT 15/64-28	M.06/83	ﾛｯｶｸﾅｯﾄ 15/64-28	(2)
21	*	B3425-552-000	KNEE PRESS ROD LIFTING LEVER	D.06/83	ﾋｻﾞｱｹﾞ ｶｲﾃﾝｳﾃﾞ B	-
21-1	*	B3425-555-000	CONNECTING ROD, VERTICAL	A.06/83	ﾋｻﾞｱｹﾞ ｶｲﾃﾝｳﾃﾞ	(1)
22		SS-8152080-SR	SCREW 15/64-28 L=19.5		ﾄﾒﾈｼﾞ 15/64-28 L=19.5	(1)
23		SS-8153010-SR	SCREW 15/64-28 L=30		ﾄﾒﾈｼﾞ 15/64-28 L=30	(1)
24	*	SS-9151540-SR	SCREW 15/64-28 L=15	D.06/83	ﾛｯｶｸﾎﾞﾙﾄ 15/64-28 L=15	-
25	*	SS-9151220-SR	SCREW 15/64-28 L=12	D.06/83	ﾛｯｶｸﾎﾞﾙﾄ 15/64-28 L=12	-
25-1	*	SS-9151610-SR	SCREW 15/64-28 L=16	A.06/83	ﾛｯｶｸﾎﾞﾙﾄ 15/64-28	(1)
26	*	B3424-552-000	KNEE PRESS ROD LIFTING LEVER	D.06/83	ﾋｻﾞｱｹﾞ ｶｲﾃﾝｳﾃﾞ A	-
27	*	B3429-552-000-A	SPRING	D.06/83	ﾋｻﾞｱｹﾞ ｶｲﾃﾝｳﾃﾞﾊﾞﾈ	-
27-1	*	B3429-555-000	SPRING	A.06/83	ﾋｻﾞｱｹﾞ ｶｲﾃﾝｳﾃﾞﾊﾞﾈ	(1)
28		B3426-552-000	THRUST RING		ﾋｻﾞｱﾃ ﾖｺｼﾞｸ ｽﾗｽﾄｳｹ	(1)

From the library of: Superior Sewing Machine & Supply LLC

10. BOBBIN WINDER COMPONENTS

糸巻関係

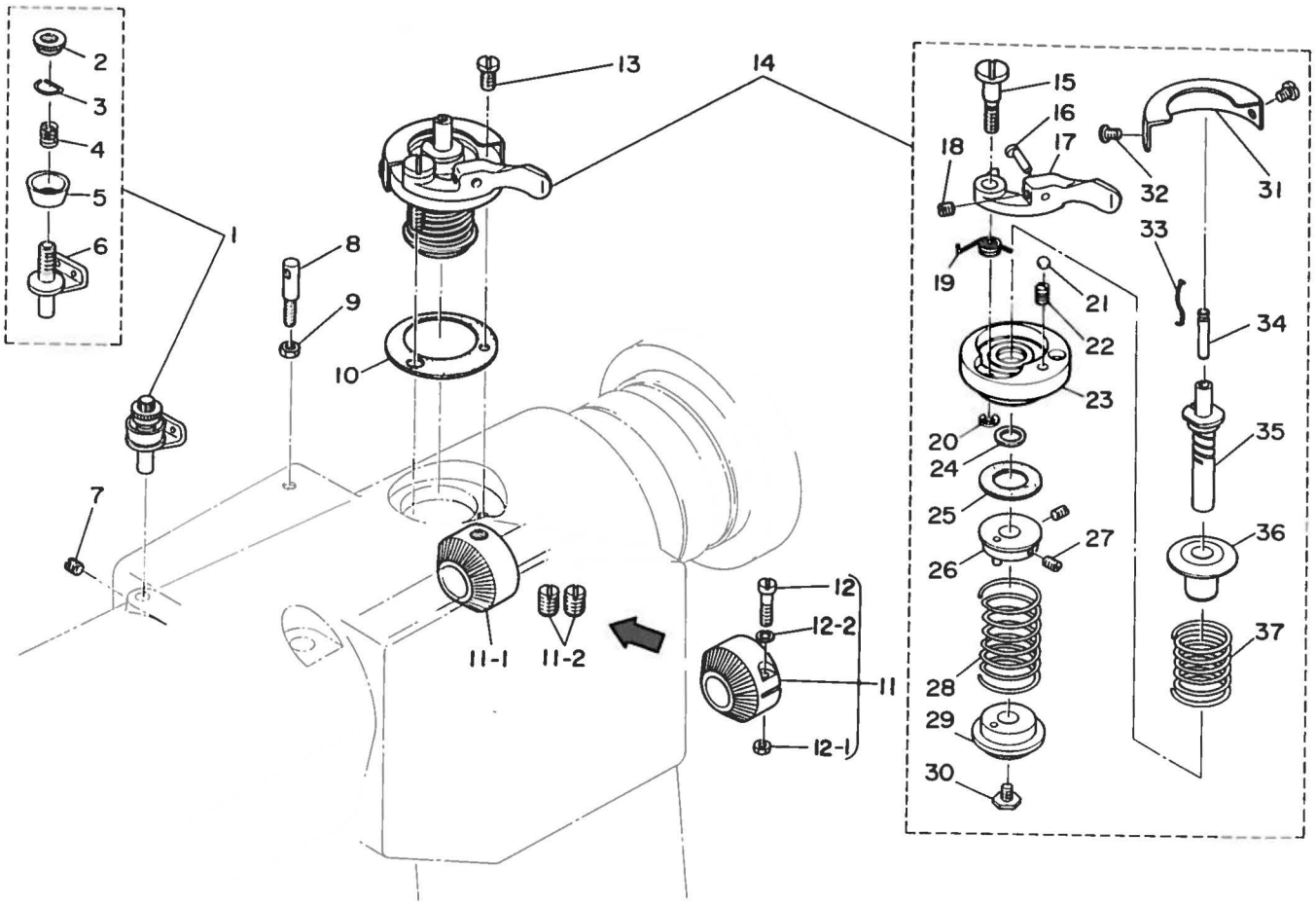

Ref. No.	Note 注記	Part No. 品番	Description	E.C. 変更年月	品名	Amt. Req. 数量
1		100-07169	THREAD GUIDE SHAFT ASM.		イトマキ アンナイシャク クミ	1
2		G5106-151-CC0	TENSION NUT		イトチョーシ ナット	(1)
3		G5109-151-CC0	SPRING		イトチョーシ ナット トメバネ	(1)
4		G5107-151-CC0	SPRING		イトチョーシ バネ	(1)
5		G5108-151-CC0	THREAD DISC		イトチョーシ サラ	(1)
6		10C-07151	THREAD GUIDE SHAFT SUBASSEMBLY		イトマキ アンナイシャク クミ	(1)
7		SS-811C510-SP	SCREW 11/64-40 L=5		トメネジ 11/64-40 L=5	1
8		100-07003	THREAD GUIDE PIN		イトマキ アンナイピン	1
9		NS-6110310-SP	NUT 11/64-40		ロクカクナット 11/64-40	1
10		B3214-470-CC0	GASKET		イトマキダイ パッキン	1
11		B3212-470-CA0	DRIVING BEVEL PULLEY ASM.	D.05/80	B3212-470-A00	-
11-1		B3212-470-A00	DRIVING BEVEL PULLEY	A.05/80	イトマキクトクルマ	1
11-2		SS-8661030-SP	SCREW 1/4-40 L=10	A.05/80	トメネジ 1/4-40 L=10	2
12		SS-7111810-SP	SCREW 11/64-40 L=18	D.05/80	マルヒラネジ 11/64-40 L=18	-
12-1		NS-6110310-SP	NUT 11/64-40	D.05/80	ロクカクナット 11/64-40	-
12-2		WS-0441040-KP	SPRING WASHER 4.4X7.4X1	D.05/80	バネザガネ 4.4X7.4X1	-
13		SS-7111120-SP	SCREW 11/64-40 L=10.5		マルヒラネジ 11/64-40 L=10.5	1
14		100-07359	BOBBIN WINDER BASE ASM.		シタイトマキ ソーチ クミ	1
15		B3208-470-CC0	HINGE SCREW STUD		イトマキレバーネジ	(1)
16		100-07409	PIN		イトマキ オシピン	(1)
17		B3204-470-CC0	BOBBIN WINDER LEVER		イトマキレバー	(1)
18		SS-811C510-SP	SCREW 11/64-40 L=5		トメネジ 11/64-40 L=5	(1)
19		B3205-470-CC0	SPRING		イトマキレバーバネ	(1)
20		RE-032C000-K0	SNAP RING 3.2		Eカタトメワ 3.2	(1)
21		B3220-470-CC0	BALL		レバートメダマ	(1)
22	*	B3221-470-CC0	SPRING	D.01/83	100-38404	-
	*	10C-38404	SPRING	A.01/83	レバーオサエバネ	(1)
23		B3201-470-CC0	BOBBIN WINDER BASE		イトマキダイ	(1)
24		B3216-470-CC0	BOBBIN WINDER WASHER		イトマキシャクケ ワッシャ	(1)
25		B3203-470-C00	RUBBER CUSHION		クッションゴム	(1)
26		B3210-470-CA0	SPRING HOLDER ASM.		イトマキクルマ バネウケ クミ	(1)
27		SS-809C540-SP	SCREW 9/64-40 L=5		トメネジ 9/64-40 L=5	(2)
28		B3213-470-C00	SPRING		イトマキクルマ バネ	(1)
29		B3211-470-CC0	BEVEL PULLEY		イトマキクルマ	(1)
30		B3217-470-CC0	BEVEL PULLEY SET SCREW		イトマキクルマ トメネジ	(1)
31		100-075C8	BOBBIN WINDER BASE COVER		イトマキダイ カバー	(1)
32		SS-2090620-SP	SCREW 9/64-40 L=5.5		マルサラネジ 9/64-40 L=5.5	(2)
33		B3218-470-CC0	WIRE SPRING		ボビン トメバネ	(1)
34		B3219-470-CC0	WIRE SPRING SUPPORTER		ボビン トメバネウケ	(1)
35		B3209-470-CC0	BOBBIN WINDER SHAFT		イトマキシャク	(1)
36		B3202-470-CC0	BEVEL BUSHING		イトマキシャクケ	(1)
37		B3207-470-CC0	SPRING		イトマキシャクバネ	(1)

From the library of: Superior Sewing Machine & Supply LLC

11. BELT COVER COMPONENTS

ベルトカバー関係

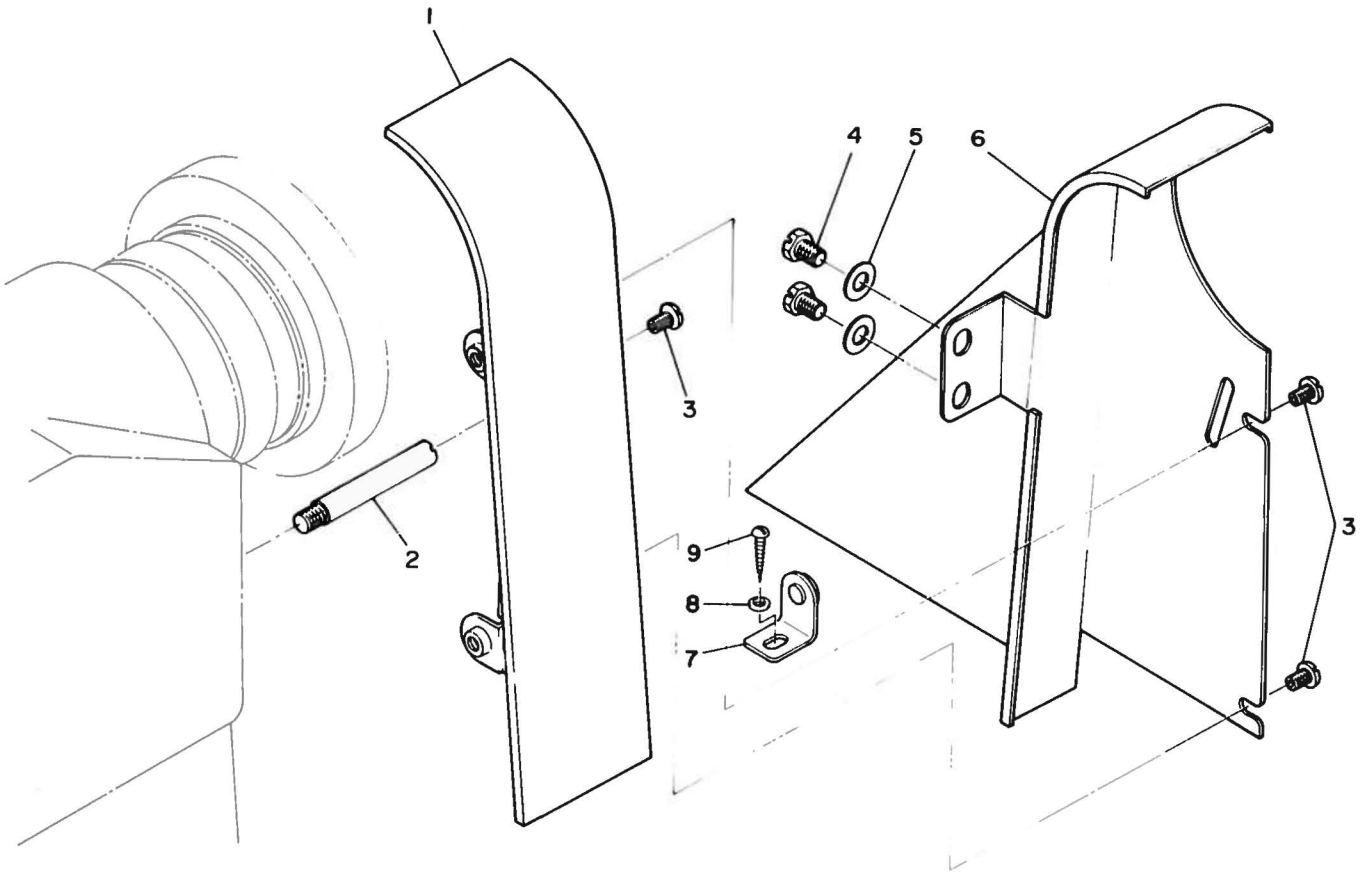

Ref. No.	Note 注記	Part No. 品番	Description	E. C. 変更年月	品名	Amt. Req. 数量
1		100-39006	BELT COVER A		ﾍﾞﾙﾄｶﾊﾞｰ A	1
2		100-39105	BELT COVER SUPPORT STUD		ﾍﾞﾙﾄｶﾊﾞｰ ｼﾁｭｰ	1
3		SS-5110740-TP	SCREW 11/64-40 L= 6.5		ﾄﾗｽﾈｼﾞ 11/64-40 L=6.5	3
4		SS-9150860-SP	SCREW 15/64-28 L=8		ﾛｯｶｸﾎﾞﾙﾄ 15/64-28 L=8	2
5		WP-0621016-SD	WASHER 6.2X13X1		ﾋﾗｻﾞｶﾞﾈ 6.2X13X1	2
6		100-39204	BELT COVER B		ﾍﾞﾙﾄｶﾊﾞｰ B	1
7	*	100-39659	BELT COVER PRESS PLATE	A.02/82	ﾍﾞﾙﾄｶﾊﾞｰ ｱﾃｲﾀ ｸﾐ	1
8	*	WP-0501016-SC	WASHER 5X10.5X1	A.02/82	ﾋﾗｻﾞｶﾞﾈ 5X10.5X1	1
9	*	SK-3482500-SC	WOOD SCREW D=4.8 L=25	A.02/82	ﾏﾙﾓｸﾈｼﾞ D=4.8 L=25	1

From the library of: Superior Sewing Machine & Supply LLC

12. THREAD STAND COMPONENTS (1)

糸立装置関係（1）

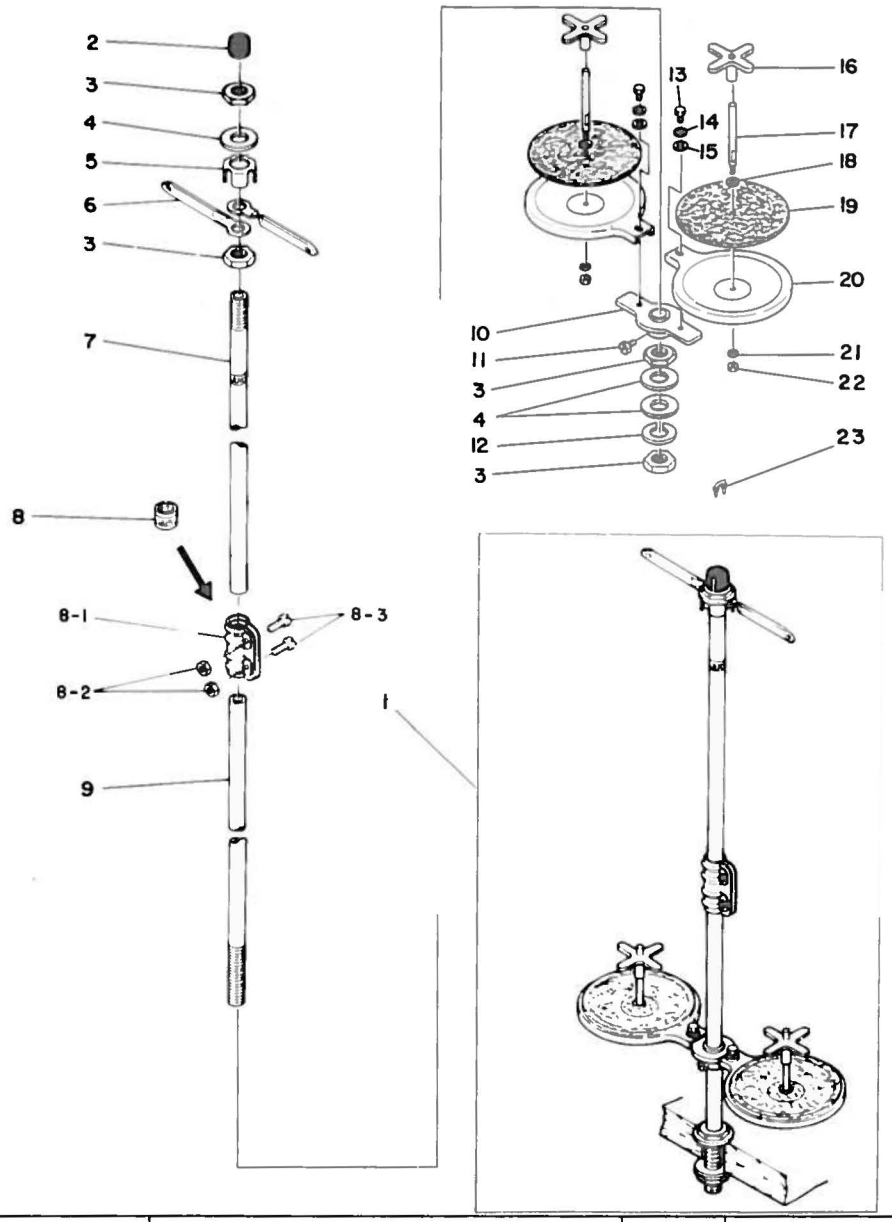

Ref. No.	Note 注記	Part No. 品番	Description	E. C. 変更年月	品名	Amt. Req. 個数
1		D3301-555-BA0	THREAD STAND ASM.		イトタテソーチ クミ	1
2		B3311-704-000	SPOOL REST ROD RUBBER CAP		イトタテボー ホゴゴム	(1)
3		NM-6160511-SE	NUT M16X1.5	D.12/79	6カクナツト M16X1.5 1シユ	-
		B3317-704-000	NUT C15	A.12/79	イトタテボー トメナリト	(4)
4		WP-1702600-S0	WASHER 17X30X2.6		ヒラザガネ 17X30X2.6	(3)
5		D3306-555-B00	THREAD GUIDE STOPPER PLATE		イトタテイトアンナイ トメイタ	(1)
6		B3307-704-000	THREAD GUIDE A		イトタテ イトアンナイ A	(2)
7		B3313-704-000	SPOOL REST ROD, UPPER	D.12/79	イトタテボー ウエ	-
		B3313-704-0A0	SPOOL REST ROD ASM., UPPER	A.12/79	イトタテボー ウエ クミ	(1)
8		B3305-704-0A0	SPOOL REST ROD JOINT ASM.	D.12/79	イトタテボー ツギテ クミ	-
8-1		B3305-704-000-A	SPOOL REST ROD JOINT	A.12/79	イトタテボーツギテ	(1)
8-2		NM-6040000-SN	NUT M4	A.12/79	6カクナツト M 4X0.7	(2)
8-3		SM-6041410-SC	SCREW M4X0.7 L=14	A.12/79	ヒラネジ M4X0.7 L=14	(2)
9		B3301-704-000	SPOOL REST ROD, LOWER	D.12/79	イトタテボー シタ	-
		B3301-704-000-A	SPOOL REST ROD, LOWER	A.12/79	イトタテボー シタ	(1)
10		D3302-555-B00	BRACKET		イトタテ ウケダイ	(1)
11		SM-9061080-SE	SCREW M6 L=10		6カクボルト M6 L=10	(1)
12		WS-1643202-KR	SPRING WASHER 16.4X26.6X3.2		バネザガネ 16.4X26.6X3.2	(1)
13		SM-9050813-SE	SCREW M5X0.8 L=8		6カクボルト M5X0.8 L= 8	(2)
14		WS-0521010-KN	SPRING WASHER 5.2X8.2X1		バネザガネ 5.2X8.2X1	(2)
15		WP-0520656-SA	WASHER 5.2X9.5X0.6		ヒラザガネ 5.2X9.5X0.6	(2)
16		B3312-012-000	SPOOL VIBRATION STOPPER		イトマキ フレドメ	(2)
17		B3305-012-000	SPOOL PIN		イトマキ ウケボー	(2)
18		WP-0560860-SE	WASHER 5.6X12X0.8		ヒラザガネ 5.6X12X0.8	(2)
19		B3311-012-000	SPOOL REST CUSHION		イトマキ ウケザ	(2)
20		B3303-704-000	SPOOL REST		イトタテ ウケイタ	(2)
21		WS-0521010-KN	SPRING WASHER 5.2X8.2X1		バネザガネ 5.2X8.2X1	(2)
22		NS-6123881-SE	NUT 3/16-28		6カクナツト 3/16-28	(2)
23		MA0-11532000	STAPLE		コード ステツプル	(3)

From the library of: Superior Sewing Machine & Supply LLC

13. THREAD STAND COMPONENTS (2)

糸立装置関係（２）

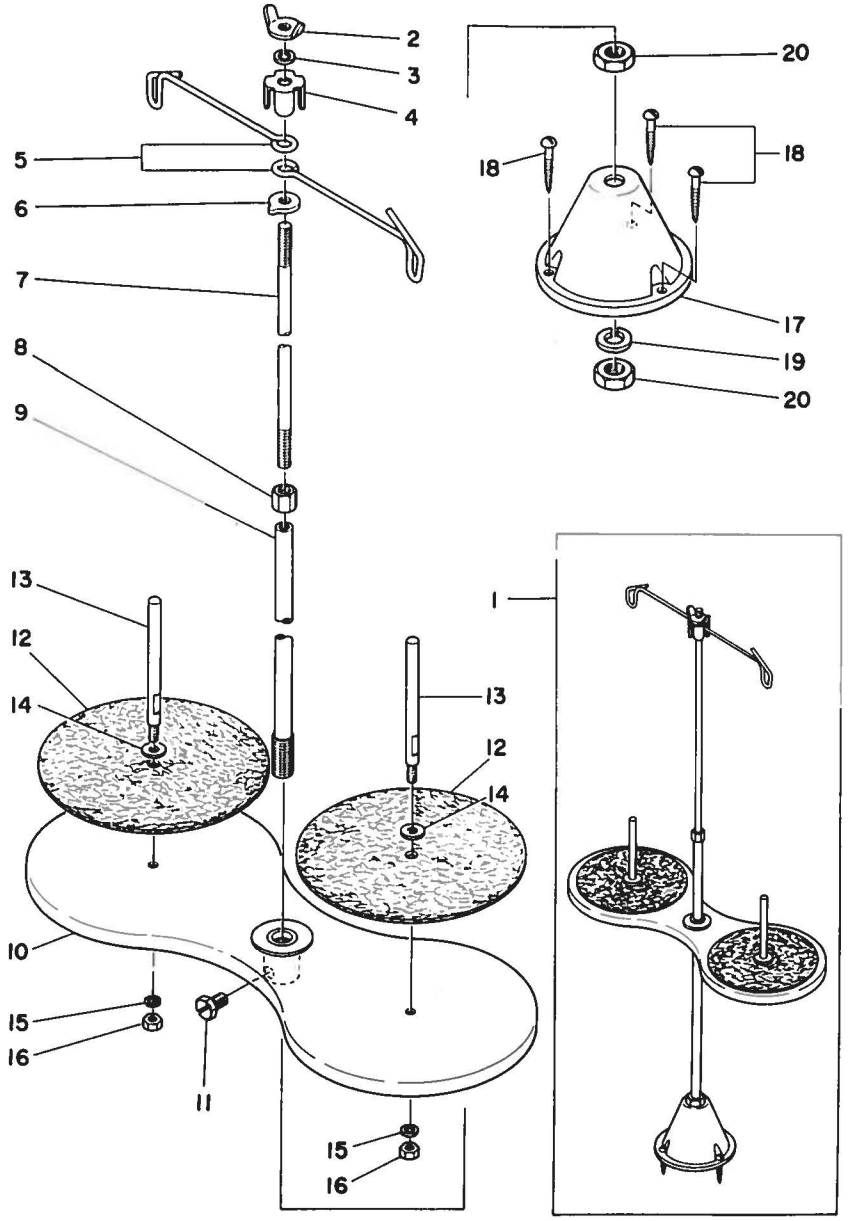

Ref. No.	Note 注記	Part No. 品番	Description	E. C. 変更年月	品名	Amt. Req. 個数
1		B3301-012-0A0	THREAD STAND ASM.		イトタテ ソーチ クミ	1
2		B3310-012-000	POSITION CUP SET SCREW		イトタテ イトアンナイ ジメネジ	(1)
3		WS-0641560-KR	SPRING WASHER 6.4X11.9X1.5		ハネワカ 6.4X11.9X1.5	(1)
4		B3309-012-000	POSITION CUP		イトタテ イトアンナイ マワリトメ	(1)
5		B3307-012-000	THREAD GUIDE		イトタテ イトアンナイ	(2)
6		B3308-012-000	ROD WASHER		イトタテ イトアンナイワク	(1)
7		B3306-012-000	SPOOL ROD		イトタテ ウエカン	(1)
8		NM-6061061-SE	NUT M6		6カクナット M6	(1)
9		B3302-012-000	SPOOL REST ROD		イトタテ シタカン	(1)
10		B3303-012-0A0	SPOOL REST ASM.		イトマキワク クミ	(1)
11		SM-9061080-SE	SCREW M6 L=10		6カクボルト M6 L=10	(1)
12		B3311-012-000	SPOOL REST CUSHION		イトマキ ウケザ	(2)
13		B3305-012-000	SPOOL PIN		イトマキ ウケボー	(2)
14		WP-0560860-SE	WASHER 5.6X12X0.8		ヒラザカ 5.6X12X0.8	(2)
15		WS-0531060-KR	SPRING WASHER 5.3X8.3X1		ハネワカ 5.3X8.3X1	(2)
16		NS-6123881-SE	NUT 3/16-28		6カクナット 3/16-28	(2)
17		B3301-012-000	SPOOL STAND		イトタテダイ	(1)
18		SK-3452000-SE	WOOD SCREW D=4.5 L=20		マルモクネジ D=4.5 L=20	(3)
19		WS-1002560-KR	SPRING WASHER 10X18X2.5		ハネワカ 10X18X2.5	(1)
20		NM-6100663-SE	NUT M10		6カクナット M10	(2)

From the library of: Superior Sewing Machine & Supply LLC

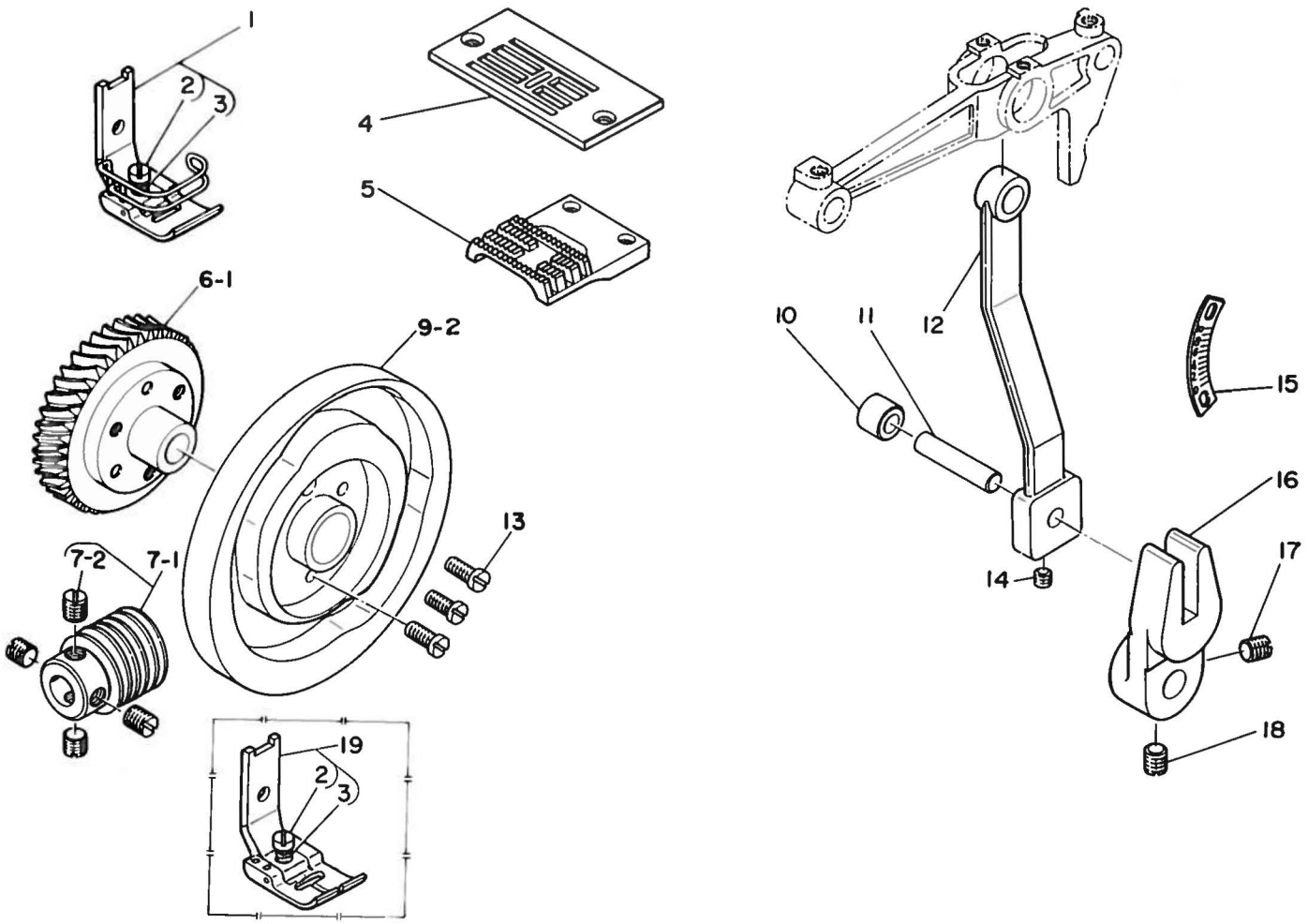

Ref. No.	Note 注記	Part No. 品番	Description	E. C. 変更年月	品名	Amt. Req. 数量
1		100-45052	PRESSER FOOT ASM.		ｵｻｴ A ｸﾐ	1
2		SS-6090810-SP	SCREW 9/64-40 L= 7.5		ﾋﾗﾈｼﾞ 9/64-40 L=7.5	(1)
3		B1525-582-0C0	SPRING		ｵｻｴﾊﾞﾈ	(1)
4		100-41002	THROAT PLATE		ﾊﾘｲﾀ A	1
5		100-47009	FEED DOG		ｵｸﾘ A	1
6-1		100-43461	WORM WHEEL ASM.	A.08/79	ｳｵｰﾑﾎｲﾙ ｸﾐ	1
7-1		100-43065	WORM ASM.	A.08/79	ｳｵｰﾑ A ｸﾐ	1
7-2		SS-8660610-TP	SCREW 1/4-40 L=6	A.08/79	ﾄﾒﾈｼﾞ 1/4-40 L=6	(4)
9-1		10C-43610	NEEDLE VIBRATING CAM	D.05/81	ﾊﾘﾌﾘｶﾑ	-
9-2		10C-43628	NEEDLE VIBRATING CAM	A.05/81	ﾊﾘﾌﾘｶﾑ	1
10		B2502-280-FCA	FEED CAM ROLLER		ﾇﾉｵｸﾘﾀﾑ ｺﾛ (ﾀﾞｲ) A	1
11		100-44204	ROD GUIDE PIN		ﾊﾘﾌﾘﾛｯﾄﾞ ｼﾞｸ	1
12		10C-44006	NEEDLE VIBRATING ROD	D.05/81	ﾊﾘﾌﾘﾛｯﾄﾞ	-
12-1		10C-44014	NEEDLE VIBRATING ROD	A.05/81	ﾊﾘﾌﾘﾛｯﾄﾞ	1
13		SS-7111410-SP	SCREW 11/64-40 L=14		ﾏﾙﾋﾗﾈｼﾞ 11/64-40 L=14	3
14		SS-8110422-TP	SCREW 11/64-40 L=4		ﾄﾒﾈｼﾞ 11/64-40 L=4	1
15		10C-44303	SCALE PLATE		ﾌﾘﾊﾊﾞﾒﾓﾘ	1
16		100-44105	ROD GUIDE		ﾊﾘﾌﾘﾛｯﾄﾞ ｱﾝﾅｲ	1
17		SS-8660810-TP	SCREW 1/4-40 L=8		ﾄﾒﾈｼﾞ 1/4-40 L=8	1
18		SS-8660970-TP	SCREW 1/4-40 L= 8.5		ﾄﾒﾈｼﾞ 1/4-40 L=8.5	1
19	#09	100-45755	PRESSER FOOT ASM.	A.01/85	ｵｻｴ ｸﾐ	1

#09.....Special order part 特別注文部品

All parts other then above are same as those of LZ-1280

上記以外の部品はLZ-1280と共通です。

From the library of: Superior Sewing Machine & Supply LLC

15. EXCLUSIVE PARTS FOR LZ-1287

LZ-1287専用部品

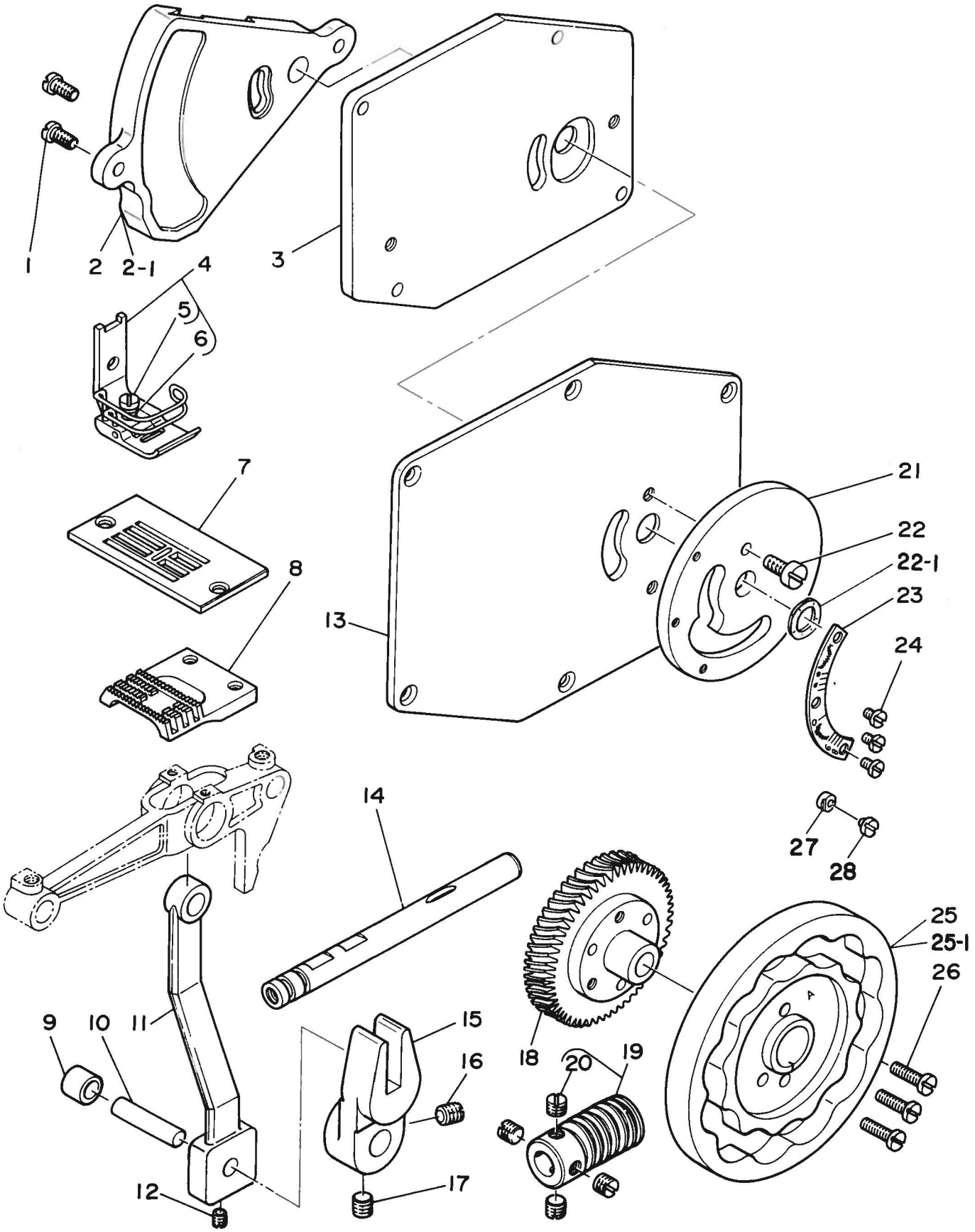

From the library of: Superior Sewing Machine & Supply LLC

Ref. No.	Note 注記	Part No. 品番	Description	E. C. 変更年月	品名	Amt. Req. 数量
1		SS-7110910-TP	SCREW 11/64-40 L= 8,5		ﾏﾙﾋﾗﾈｼﾞ 11/64-40 L= 8,5	2
2		100-54104	ARM SETTING BASE	D,10/80	ﾌﾘﾊﾊﾞ ﾁｮｰｾﾂｳﾃﾞ ｺﾃｲﾀﾞｲ	-
2-1		100-54112	ARM SETTING BASE	A,10/80	ﾌﾘﾊﾊﾞﾁｮｰｾﾂｳﾃﾞ ｺﾃｲﾀﾞｲ	1
3		100-54203	PLATE		ｺﾃｲﾀﾞｲ ﾄﾘﾂｹｲﾀ	1
4		100-55051	PRESSER FOOT ASM,		ｵｻｴ A ｸﾐ	1
5		SS-6090810-SP	SCREW 9/64-40 L= 7,5		ﾋﾗﾈｼﾞ 9/64-40 L= 7,5	(1)
6		B1525-582-000	SPRING		ｵｻｴﾊﾞﾈ	(1)
7		100-51001	THROAT PLATE		ﾊﾘｲﾀ A	1
8		100-57008	FEED DOG		ｵｸﾘ A	1
9		B2502-280-B0A	FEED CAM ROLLER		ﾇﾉｵｸﾘｶﾑ ｺﾛ (ﾀﾞｲ) A	1
10		100-44204	ROD GUIDE PIN		ﾊﾘﾌﾘﾛｯﾄﾞ ｼﾞｸ	1
11		100-54005	NEEDLE VIBRATING ROD		ﾊﾘﾌﾘﾛｯﾄﾞ	1
12		SS-8110422-TP	SCREW 11/64-40 L=4		ﾄﾒﾈｼﾞ 11/64-40 L=4	1
13		100-50300	SIDE COVER PLATE		ｱｰﾑ ｿｸﾒﾝｶﾊﾞｰ A	1
14		100-54500	SHAFT		ｵｸﾘ ﾁｮｰｾﾂｼﾞｸ	1
15		100-44105	ROD GUIDE		ﾊﾘﾌﾘﾛｯﾄﾞ ｱﾝﾅｲ	1
16		SS-8660810-TP	SCREW 1/4-40 L=8		ﾄﾒﾈｼﾞ 1/4-40 L=8	1
17		SS-8660970-TP	SCREW 1/4-40 L= 8,5		ﾄﾒﾈｼﾞ 1/4-40 L=8,5	1
18		100-53452	WORM WHEEL ASM,		ｳｵｰﾑﾎｲｰﾙ ｸﾐ	1
19		100-53056	WORM ASM,		ｳｵｰﾑ A ｸﾐ	1
20		SS-8660610-TP	SCREW 1/4-40 L=6		ﾄﾒﾈｼﾞ 1/4-40 L=6	(4)
21		100-54401	SCALE MOUNTING BASE		ﾌﾘﾊﾊﾞﾒﾓﾘ ﾄﾘﾂｹｲﾀ	1
22		SS-6111010-SP	SCREW 11/64-40 L= 9,5		ﾋﾗﾈｼﾞ 11/64-40 L= 9,5	1
22-1		WZ-1052010-KP	WAVED WASHER 10,5X14,5X0,3	A,08/79	ﾅﾐｶﾞﾀﾜﾘｶﾞﾈ10,5X14,5X0,3	1
23		100-54302	SCALE PLATE		ﾌﾘﾊﾊﾞﾒﾓﾘ	1
24		SS-7080510-SP	SCREW 1/8-44 L= 4,5		ﾏﾙﾋﾗﾈｼﾞ 1/8-44 L= 4,5	3
25	◇07	100-53502	NEEDLE VIBRATING CAM A		ﾊﾘﾌﾘｶﾑ A	1
25-1	◇08	100-53601	NEEDLE VIBRATING CAM B	A,08/79	ﾊﾘﾌﾘｶﾑ B	1
26		SS-7111410-SP	SCREW 11/64-40 L=14		ﾏﾙﾋﾗﾈｼﾞ 11/64-40 L=14	3
27		100-15907	LEVER STOPPER	A,06/81	ﾚﾊﾞｰ ｽﾄｯﾊﾟｰ	1
28		SS-7090410-SP	SCREW 9/64-40 L= 3,5	A,06/81	ﾏﾙﾋﾗﾈｼﾞ 9/64-40 L=3,5	1

Note(注記) ◇07.....For egual throw 等振り型用

◇08.....For unegual throw 三日月型用

☆All parts other ther above are same as those of LZ-1280. 上記以外の部品はLZ-1280と共通です。

From the library of: Superior Sewing Machine & Supply LLC

16. EXCLUSIVE PARTS FOR LZ-1285

LZ-1285専用部品

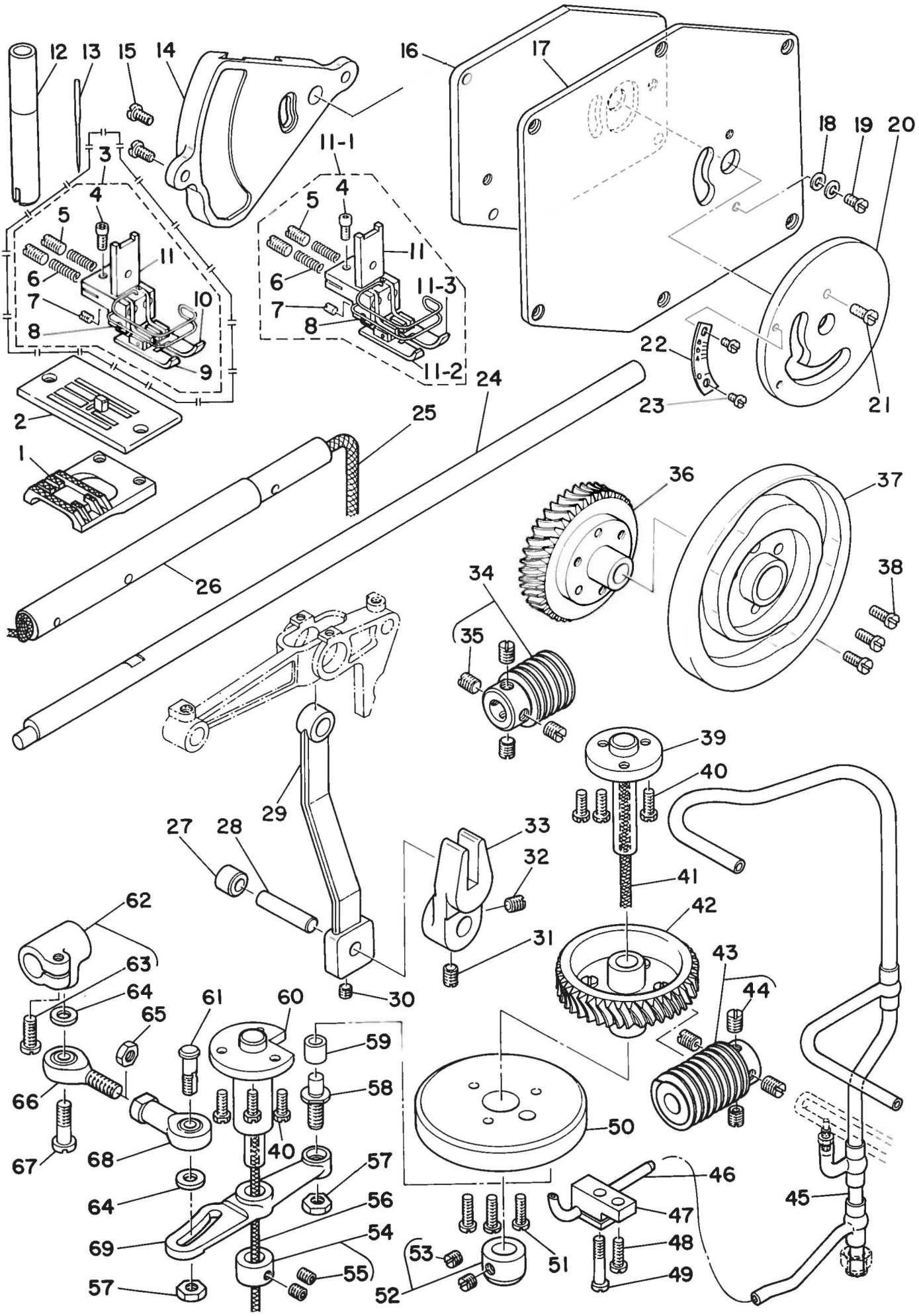

From the library of: Superior Sewing Machine & Supply LLC

Ref. No.	Note 注記	Part No. 品番	Description	E.C. 変更年月	品名	Amt. Req. 数量
1		10C-64C04	FEED DOG		ｵｸﾘﾊﾞ	1
2		10C-61554	THROAT PLATE ASM.		ﾊﾘｲﾀ ｸﾐ	1
3	#09	10C-63451	PRESSER FOOT ASM.		ｵｻｴ ｸﾐ	1
4		SS-6580752-TP	SCREW 1/8-40 L=7		ﾛｯｶｸｱﾅﾎﾞﾙﾄ 1/8-40 L=6.3	(1)
5		SS-8111010-TP	SCREW 11/64-4C L=9.5		ﾄﾒﾈｼﾞ 11/64-4C L=9.5	(2)
6		10C-63600	SPRING		ｵｻｴｳﾃﾞﾊﾞﾈ	(2)
7		SS-808C410-TP	SCREW 1/8-44 L=3.5		ﾄﾒﾈｼﾞ 1/8-44 L=3.5	(1)
8		10C-63501	PIN		ｵｻｴｳﾃﾞｼﾞｸ	(1)
9	#09	10C-63006	PRESSER FOOT, LEFT		ｵｻｴｼﾀ ﾋﾀﾞﾘ	(1)
10	#09	10C-63105	PRESSER FOOT, RIGHT		ｵｻｴｼﾀ ﾐｷﾞ	(1)
11		10C-63402	PRESSER FOOT, UPPER		ｵｻｴｳﾃﾞ	(1)
11-1	*	10C-62750	PRESSER FOOT ASM.	A.08/81	ｵｻｴ ｸﾐ	1
11-2	*	10C-62701	PRESSER FOOT, LEFT	A.08/81	ｵｻｴ ｼﾀ ﾋﾀﾞﾘ	(1)
11-3	*	10C-62800	PRESSER FOOT, RIGHT	A.08/81	ｵｻｴ ｼﾀ ﾐｷﾞ	(1)
12		10C-63709	PRESSER BAR BUSHING		ｵｻｴﾎﾞｰﾒﾀﾙ	1
13		MC-1923F08-C0	NEEDLE 438SUK 80		ﾊﾘ 438SUK 80	1
14		10C-54104	ARM SETTING BASE		ﾌﾘﾊﾊﾞ ﾁｮｰｾﾂｳﾃﾞ ｺﾃｲﾀﾞｲ	1
15		SS-711C910-TP	SCREW 11/64-4C L= 8.5		ﾏﾙﾋﾗﾈｼﾞ 11/64-40 L=8.5	2
16		10C-54203	PLATE		ｺﾃｲﾀﾞｲ ﾄﾘｼﾝｹｲﾀ	1
17		10C-50300	SIDE COVER PLATE		ｱｰﾑ ｿｸﾒﾝｶﾊﾞｰ A	1
18		WP-048C856-SP	WASHER 4.8X8.4X0.8		ﾋﾗｻﾞｶﾞﾈ 4.8X8.4X0.8	2
19		SS-6110510-SP	SCREW 11/64-4C L=5		ﾋﾗﾈｼﾞ 11/64-4C L=5	1
20		10C-62206	SCALE MOUNTING BASE		ﾌﾘﾊﾊﾞﾒﾓﾘ ﾄﾘﾂｹｲﾀ	1
21		SS-6111010-SP	SCREW 11/64-4C L= 9.5		ﾋﾗﾈｼﾞ 11/64-40 L=9.5	1
22		10C-62107	SCALE PLATE		ﾌﾘﾊﾊﾞﾒﾓﾘ	1
23		SS-708C510-SP	SCREW 1/8-44 L= 4.5		ﾏﾙﾋﾗﾈｼﾞ 1/8-44 L=4.5	2
24		10C-65100	HOOK DRIVING SHAFT		ｼﾀｼﾞｸ	1
25		CQ-5050000-C0	OIL WICK		ﾕｼﾝ	0.3
26		10C-64103	FEED ROCKER SHAFT		ｽｲﾍｲｵｸﾘｼﾞｸ	1
27	#03	B2502-280-ECA	FEED CAM ROLLER		ﾇﾉｵｸﾘﾑ ｺﾛ (ﾀﾞｲ) A	1
28		10C-44204	ROD GUIDE PIN		ﾊﾘﾌﾘﾛｯﾄﾞ ｼﾞｸ	1
29		10C-44006	NEEDLE VIBRATING ROD	D.05/81	ﾊﾘﾌﾘﾛｯﾄﾞ	-
29-1		10C-44014	NEEDLE VIBRATING ROD	A.05/81	ﾊﾘﾌﾘﾛｯﾄﾞ	1
30		SS-8110422-TP	SCREW 11/64-40 L=4		ﾄﾒﾈｼﾞ 11/64-4C L=4	1
31		SS-8660970-TP	SCREW 1/4-40 L= 8.5		ﾄﾒﾈｼﾞ 1/4-40 L=8.5	1
32		SS-8660810-TP	SCREW 1/4-40 L=8		ﾄﾒﾈｼﾞ 1/4-40 L=8	1
33		10C-44105	ROD GUIDE		ﾊﾘﾌﾘﾛｯﾄﾞ ｱﾝﾅｲ	1
34	#03	10C-43065	WORM ASM.		ｳｵｰﾑ A ｸﾐ	1
35		SS-8660610-TP	SCREW 1/4-40 L=6		ﾄﾒﾈｼﾞ 1/4-40 L=6	(4)
36		10C-43461	WORM WHEEL ASM.		ｳｵｰﾑﾎｲﾙ ｸﾐ	1
37		10C-43610	NEEDLE VIBRATING CAM	D.05/81	ﾊﾘﾌﾘｶﾑ	-
37-1		10C-43628	NEEDLE VIBRATING CAM	A.05/81	ﾊﾘﾌﾘｶﾑ	1
38		SS-7111410-SP	SCREW 11/64-40 L=14		ﾏﾙﾋﾗﾈｼﾞ 11/64-40 L=14	3
39		10C-64905	FEED CAM SHAFT		ｵｸﾘﾑｼﾞｸ	1
40		SS-9661120-CP	SCREW 1/4-40 L=10.5		ﾛｯｶｸﾎﾞﾙﾄ 1/4-40 L=10.5	6
41		CQ-5050C00-00	OIL WICK		ﾕｼﾝ	0.6
42		10C-43461	WORM WHEEL ASM.		ｳｵｰﾑﾎｲﾙ ｸﾐ	1
43		10C-63857	WORM ASM.		ｵｸﾘﾑ ｸﾛｰｳｵｰﾑ ｸﾐ	1
44		SS-866C610-TP	SCREW 1/4-40 L=6		ﾄﾒﾈｼﾞ 1/4-40 L=6	(4)
45		10C-65407	OIL SUPPLY PIPE		ｳﾜｼﾞｸ ｷｭｰﾕﾊﾟｲﾌﾟ	1
46		10C-65209	CAM OIL PIPE		ｶﾑｷｭｰﾕﾊﾟｲﾌﾟ	1
47		10C-65308	OIL PIPE HOLDER		ｶﾑｷｭｰﾕﾊﾟｲﾌﾟ ﾎﾙﾀﾞ	1
48		SS-7111410-SP	SCREW 11/64-40 L=14		ﾏﾙﾋﾗﾈｼﾞ 11/64-40 L=14	1
49		SS-7112420-SP	SCREW 11/64-40 L=24		ﾏﾙﾋﾗﾈｼﾞ 11/64-40 L=24	1
50		10C-64707	FEED CAM		ｵｸﾘﾑ	1
51		SS-7111410-SP	SCREW 11/64-40 L=14		ﾏﾙﾋﾗﾈｼﾞ 11/64-40 L=14	3
52		CS-1031210-SH	THRUST COLLAR ASM. D=10.32 W=12		ｽﾗｽﾄｶｳﾗ D=10.32 W=12 ｸﾐ	1
53		SS-8660610-TP	SCREW 1/4-40 L=6		ﾄﾒﾈｼﾞ 1/4-40 L=6	(2)
54		CS-079101F-SH	THRUST COLLAR ASM.		ｽﾗｽﾄｶｳﾗ D=7.94 W=10	1
55		SS-8110422-TP	SCREW 11/64-40 L=4		ﾄﾒﾈｼﾞ 11/64-4C L=4	(2)
56		CQ-303C000-C0	OIL WICK		ﾕｼﾝ	0.4
57		NS-6150430-SP	NUT 15/64-28		ﾛｯｶｸﾅｯﾄ 15/64-28	2
58		10C-65001	FEED CAM ROLLER SHAFT		ｵｸﾘﾑ ﾛｰﾗｰｼﾞｸ	1
59	#03	B2502-280-CCA	FEED CAM ROLLER		ﾇﾉｵｸﾘﾑ ｺﾛ A	1
60		10C-648C6	FEED CAM LEVER SHAFT		ｵｸﾘﾑﾚﾊﾞｰｼﾞｸ	1
61		10C-64608	FEED REGULATOR		ｵｸﾘﾁｮｰｾﾂﾈｼﾞ	1
62		10C-64251	FEED ROCKER SHAFT CRANK ASM.		ｽｲﾍｲｵｸﾘｳﾃﾞ	1
63		SS-6121210-SP	SCREW 3/16-28 L=12		ﾋﾗﾈｼﾞ 3/16-28 L=9	(1)
64		WP-0612066-SP	WASHER 6.1X11X2		ﾋﾗｻﾞｶﾞﾈ 6.1X11X2	2
65		NM-606C001-SE	NUT M6		ﾛｯｶｸﾅｯﾄ M6 1ｼｭ	1
66		10C-64301	BALL JOINT A		ﾎﾞｰﾙｼﾞｮｲﾝﾄ A	1
67		SD-0601051-SP	HIGE SCREW D=6 H=13		ﾀﾞﾝﾈｼﾞ D=6 H=10.5	1
68		10C-64400	BALL JOINT B		ﾎﾞｰﾙｼﾞｮｲﾝﾄ B	1
69		10C-645C9	FEED CAM LEVER		ｵｸﾘﾑﾚﾊﾞｰ	1

#03.....For Selective part　　選択部品

#09.....Special order part　　特別注文部品

All parts other then above are same as those of LZ-1280

上記以外の部品はLZ-1280と共通です。

From the library of: Superior Sewing Machine & Supply LLC

17. LZ-1280, 1286/RF-1 (SPECIAL ORDER PARTS) (特別注文部品)

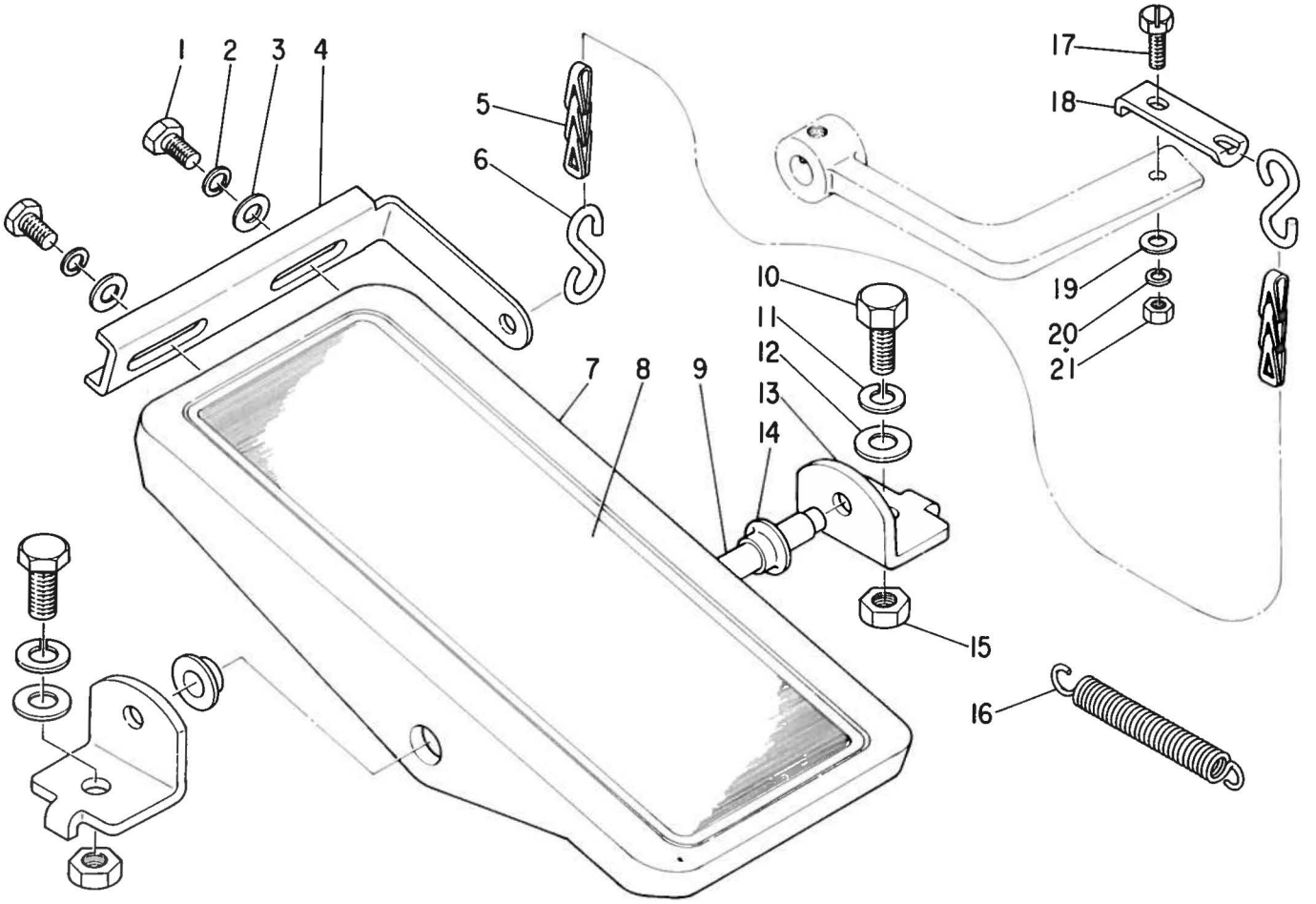

Ref. No.	Note 注記	Part No. 品番	Description	E. C. 変更年月	品名	Amt. Req. 数量
1		SM-9061203-SE	SCREW M6 L=12		6カクボルト M6 L=12	2
2		WS-0621210-KR	SPRING WASHER 6.2X11.4X1.2		ハネサカネ 6.2X11.4X1.2	2
3		WP-0671016-SE	WASHER 6.7X13X1		ヒラサカネ 6.7X13.0X1.0	2
4		B8125-280-00E	PEDAL ADJUSTING PLATE		フミイタ チヨウセツイタ	1
5		B8131-019-000	CHAIN		クサリ	1.0
6		B8133-019-000	S SHAPED HOOK		Sカタ カナク	2
7		B8151-771-000	PEDAL		Zキヤクヨーヘタル	1
8		B8152-771-000	PEDAL MAT		ヘタルマツト	1
9		B8153-771-000	PEDAL CONNECTING ROD		ヘタルシク	1
10		SM-9082023-SE	SCREW M8 L=20		6カクボルト M8 L=20	2
11		WS-0861410-KR	SPRING WASHER 8.6X15X1.4		ハネサカネ 8.6X15.0X1.4	2
12		WP-0871602-SE	WASHER 8.7X18X1.6		ヒラサカネ 8.7X18.0X1.6	2
13		B8114-555-B0E	PEDAL SHAFT BRACKET		フミイタシク ウケイタ	2
14		B8113-555-B00	PEDAL BUSHING		フミイタ フツシユ	2
15		NM-6080721-SE	NUT M8		6カクナツト M8	2
16		MAT-80117S00	SPRING		ヒタトリ ハネ	1
17		SS-9111510-SP	SCREW 11/64-40 L=15		6カクボルト 11/64-40 L=15	1
18		GRF-01001000	PLATE		クサリ トリツケイタ	1
19		WP-0501016-SD	WASHER 5X10.5X1		ヒラサカネ 5.0X10.5X1	1
20		WS-0441040-KP	SPRING WASHER 4.4X7.4X1		ハネサカネ 4.4X7.4X1	1
21		NS-6110420-SP	NUT 11/64-40		6カクナツト 11/64-40	1

From the library of: Superior Sewing Machine & Supply LLC

Part No. 品番	Page 頁	Ref. No.
BP-3000000-00	16	19
B1111-012-000	4	4
B1114-012-000	2	23
B1147-555-000	10	65
B1148-555-000	10	64
B1158-581-000	2	22
B1203-227-000-A	6	17
B1214-038-000	16	3
B13C7-155-CA0	14	21
B13C8-155-0A0	14	19
B1505-227-C00-A	1C	4
B1509-227-000	10	1
B1510-227-000	1C	3
B1516-552-000	10	24
B1517-552-000	10	22
B1518-481-0A0	10	20
B1520-552-000	1C	19
B1523-226-000	1C	27
B1525-582-000	10	14
B1525-582-C00	1C	17
B1525-582-C00	22	3
B1525-582-C00	24	6
B1604-155-000	12	25
B16C9-804-A00	12	35
B1636-581-A00	8	62
B1646-555-000	12	58
B1653-470-00C	12	36
B1702-155-C00	12	4
B18C8-552-0B0	14	14
B18C9-761-C00	14	9
B1810-552-C00	6	10
B1810-552-000	14	16
B1810-761-F00	14	3
B1810-761-G00-A	14	7
B1810-761-H00	14	6
B1810-761-J00	14	5
B19C5-541-A0C	6	29
B25C2-280-B0A	22	1C
B25C2-280-E0A	24	9
B2502-280-B0A	26	27
B25C2-280-C0A	26	59
B26C8-761-C00	8	16
B2616-372-000	16	13
B3116-125-CC0	2	43
B3120-125-000	2	42
B3129-012-A00	2	41
B32C1-470-C00	18	23
B32C2-470-C00	18	36
B32C3-470-C00	18	25
B32C4-470-C0C	18	17
B32C5-470-C00	18	19
B32C7-470-000	18	37
B32C8-470-000	18	15
B32C9-470-C00	18	35
B3210-470-CA0	18	26
B3211-470-00C	18	29
B3212-470-A0C	18	11-1
B3212-470-0A0	18	11
B3213-470-C00	18	28
B3214-470-000	18	10
B3216-470-00C	18	24
B3217-470-C00	18	3C
B3218-470-C00	18	33
B3219-470-000	18	34
B3220-470-C0C	18	21
B3221-470-C00	18	22
B3301-012-CA0	21	1
B3301-012-C00	21	17
B3301-704-C00-A	2C	9
B3302-012-C00	21	9
B33C3-012-CA0	21	10
B33C3-704-00C	2C	20
B33C5-012-C00	20	17
B33C5-012-C00	21	13
B33C5-704-C00-A	20	8-1
B3306-012-000	21	7
B33C7-012-C00	21	5
B33C7-704-000	20	6
B3308-012-000	21	6
B3309-012-000	21	4
B3310-012-000	21	2
B3311-012-000	20	19
B3311-012-000	21	12
B3311-704-C00	20	2
B3312-012-000	20	16
B3313-704-0A0	2C	7
B3317-704-000	2C	3
B3414-555-000	10	35
B3416-552-000	1C	28
B3416-555-000	10	36
B3418-555-000	1C	33
B3419-122-000	17	5
B3419-552-0A0-A	17	1
B3420-552-0A0-A	17	16
B3420-552-000	17	19
B3420-555-0A0	17	16-1
B3420-555-C00	17	19-1
B3421-555-000	17	6
B3424-552-000	17	26
B3425-552-000	17	21
B3425-555-C00	17	21-1
B3426-552-C00	17	28
B3427-122-C00	17	18
B3429-552-000-A	17	27
B3429-555-000	17	27-1
B3430-552-0AC	17	2
B3431-552-C00-A	17	3
B3431-581-000	10	23
B3501-552-CA0	16	38
B35C2-122-C00	16	44
B35C3-122-00C	16	46
B35C4-155-C00	16	45
B35C7-155-C0C	16	41
B3511-122-C0C	16	36
B3512-122-C00	16	35
B3513-352-000	16	27
B3514-552-C0C	16	28
B3516-552-C0C	16	25
B3524-552-C00	16	2
B3531-552-0A0	16	26
B3534-155-C0C	16	4
B3536-122-C0C	16	5
B3538-112-C0C	16	21
B3552-481-C00	16	48
B8125-280-00E	27	4
B8131-019-C00	27	5
B8133-019-C00	27	6
B8151-771-C00	27	7
B8152-771-C00	27	8
B8153-771-C00	27	9
B8219-125-C00	17	15
B8226-125-C00	17	11
B8227-125-C00	17	10
B8228-125-C0C	17	7
C0-2020000-00	6	49-2
C0-2020000-0C	12	18
C0-2020CC0-00	16	8
C0-3030000-0C	28	56
C0-5050000-00	12	1
C0-5050000-00	26	25
C0-5050000-00	26	41
CS-C791C1F-SH	26	54
CS-1031218-SH	8	65
CS-1031210-SH	8	55
CS-1031210-SH	1C	45
CS-1031210-SH	26	52
CS-111101D-SH	12	26
CS-147121A-SH	6	14
D33C1-555-BAC	20	1
D33C2-555-B00	20	10
D3306-555-B0C	20	5
D8113-555-B00	27	14
D8114-555-B0E	27	13
GRF-01001000	27	18
G51C6-151-C00	2	48
G51C6-151-C00	18	2
G51C7-151-C00	2	50
G51C7-151-000	18	4
G51C8-151-C00	2	51
G51C8-151-C00	18	5
G51C9-151-000	2	49
G51C9-151-C00	18	3
MA0-115320C0	2C	23
MAT-80117SC0	27	16
MC-1918F07-50	6	42
MC-1923F08-0C	26	13
MSG-196511C0	6	41-1
NM-6040000-SN	20	8-2
NM-6060001-SE	26	65
NM-6061061-SE	21	8
NM-6080721-SE	27	15
NM-6100663-SE	21	20
NS-6110310-SP	18	9
NS-6110310-SP	18	12-1
NS-6110420-SP	27	21
NS-6120310-SP	10	47
NS-6120310-SP	12	52
NS-6123881-SE	20	22
NS-6123881-SE	21	16
NS-6150310-SP	8	6
NS-6150310-SP	8	18
NS-6150310-SP	16	18
NS-6150430-SP	26	57
NS-6150430-SR	17	20
NS-6620310-SP	8	5
NS-6620310-SP	10	37
NS-6660430-SP	8	44
NS-6680410-SP	12	21
RE-C200000-K0	8	12
RE-C300000-K0	12	16
RE-C320000-KC	18	20
RE-C400000-K0	8	13
RE-C500000-K0	10	29
RE-C600000-K0	10	26
RE-C800000-K0	8	21
RO-C291801-00	6	9
RO-C291801-00	16	12
RO-C360802-00	14	15
RO-C371801-00	10	21
RO-C442401-0C	6	4
RO-C691801-00	8	70
RO-C691801-00	1C	43
RO-C742401-00	1C	61
RO-1372301-00	10	60
RO-4372002-00	6	23
SB-1095301-00	14	41
SB-1200001-00	6	20
SD-C380551-SL	2	15-4
SD-C600321-SP	1C	51
SD-C60C321-SP	12	51
SD-C601051-SP	26	67
SD-C630275-SP	1C	32
SD-C630301-SP	1C	30
SD-C640323-TP	8	8
SD-C640751-SP	2	1
SD-C720331-SP	10	34
SD-C800402-TP	8	9
SD-C900701-TP	12	29
SK-3452000-SE	21	18
SK-3482500-SC	19	9
SM-6041410-SC	20	8-3
SM-9050813-SE	20	13
SM-9061080-SE	20	11
SM-9061080-SE	21	11
SM-9061203-SE	27	1
SM-9082023-SE	27	10
SQ-1110402-MZ	16	14
SS-1080620-SP	14	27
SS-1090930-SP	6	26
SS-1110840-SP	2	6
SS-1110840-SP	2	28
SS-2090620-SP	18	32
SS-2090710-SP	2	14
SS-2090820-TP	4	6
SS-2090820-TP	4	10
SS-2091520-SP	16	29
SS-3120540-SP	12	20
SS-4110715-SP	16	1
SS-5110710-SP	12	45
SS-5110740-TP	4	19
SS-5110740-TP	19	3
SS-6060210-SP	4	5
SS-6080320-SP	8	35
SS-6080610-TP	6	46
SS-6080710-SP	12	32
SS-6081010-TP	16	43
SS-6081210-SP	16	47
SS-6090520-SP	8	5-3
SS-6090540-SP	8	5-3
SS-6090620-SP	8	1
SS-6090810-SP	2	5
SS-6090810-SP	10	13
SS-6090810-SP	10	16
SS-6090810-SP	22	2
SS-6090810-SP	24	5
SS-6090910-TP	10	11
SS-6110510-SP	26	19
SS-6111010-SP	12	38
SS-6111010-SP	14	13
SS-6111010-SP	24	22
SS-6111010-SP	26	21
SS-6111140-SP	12	50
SS-6111140-SP	12	57
SS-6111140-SP	16	40
SS-6111210-SP	4	22
SS-6121030-SP	10	66
SS-6121210-SP	26	63
SS-6121610-TP	10	50
SS-6121610-TP	10	54
SS-6121610-TP	12	23
SS-6580752-TP	12	8
SS-6580752-TP	26	4
SS-6660710-TP	14	43
SS-6741010-SP	17	14
SS-7080410-SP	2	7
SS-7080510-SP	24	24
SS-7080510-SP	26	23
SS-7080520-SP	6	39
SS-7090410-SP	8	31
SS-7090410-SP	24	28
SS-7090510-SP	8	37-1
SS-7090540-TP	8	37
SS-7090910-TP	6	37-1
SS-7090910-TP	8	39
SS-7110510-SP	16	20
SS-7110710-SP	6	34
SS-7110710-SP	16	6
SS-7110910-SP	2	16
SS-7110910-SP	2	55
SS-7110910-SP	4	13
SS-7110910-SP	4	14
SS-7110910-SP	16	1
SS-7110910-TP	8	46
SS-7110910-TP	8	52
SS-7110910-TP	24	1
SS-7110910-TP	26	15
SS-7111110-TP	10	9-2
SS-7111110-TP	1C	57
SS-7111120-SP	2	12
SS-7111120-SP	4	17
SS-7111120-SP	6	31
SS-7111120-SP	8	23

From the library of: Superior Sewing Machine & Supply LLC

Part No. 品番	Page 頁	Ref. No.
SS-7111120-SP	8	64
SS-7111120-SP	18	13
SS-7111410-SP	22	13
SS-7111410-SP	24	26
SS-7111410-SP	26	38
SS-7111410-SP	26	48
SS-7111410-SP	26	51
SS-7111810-SP	12	12
SS-7112420-SP	26	49
SS-7113110-SP	16	50
SS-7120910-SP	10	18
SS-7121410-SP	10	9
SS-7121410-SP	12	7
SS-7121410-SP	12	14
SS-7121410-SP	12	55
SS-7151120-SP	6	16
SS-7620750-SP	8	42
SS-7620750-SP	10	39
SS-7681650-TP	6	5
SS-8080410-TP	26	7
SS-8090410-SP	2	46
SS-8090540-SP	18	27
SS-8090670-SP	2	35
SS-8110422-TP	14	11
SS-8110422-TP	22	14
SS-8110422-TP	24	12
SS-8110422-TP	26	30
SS-8110422-TP	26	55
SS-8110510-SP	18	7
SS-8110510-SP	18	18
SS-8110750-SP	2	31
SS-8110750-SP	2	44
SS-8111010-TP	26	5
SS-8120740-SP	6	47
SS-8120740-SP	10	48
SS-8120740-SP	12	17
SS-8150410-SP	8	26
SS-8150510-TP	12	47
SS-8150710-SP	10	6
SS-8150710-SP	12	5
SS-8150710-SP	12	24
SS-8150710-SP	12	47
SS-8150710-SP	14	18
SS-8150710-SP	14	30
SS-8150710-SP	16	30
SS-8150710-TP	8	27
SS-8150750-SP	14	30
SS-8151150-SP	6	13
SS-8151150-SP	14	30-1
SS-8151150-TP	6	21
SS-8152080-SP	17	22
SS-8153010-SP	17	23
SS-8660530-TP	12	27
SS-8660530-TP	16	24
SS-8660530-TP	16	34
SS-8660610-TP	6	3
SS-8660610-TP	6	15
SS-8660610-TP	6	19
SS-8660610-TP	6	44
SS-8660610-TP	8	56
SS-8660610-TP	8	66
SS-8660610-TP	10	46
SS-8660610-TP	12	34
SS-8660610-TP	14	40
SS-8660610-TP	14	43
SS-8660610-TP	22	7-2
SS-8660610-TP	24	20
SS-8660610-TP	26	35
SS-8660610-TP	26	44
SS-8660610-TP	26	53
SS-8660810-TP	10	40
SS-8660810-TP	14	20
SS-8660810-TP	14	22
SS-8660810-TP	14	34
SS-8660810-TP	14	36
SS-8660810-TP	22	17
SS-8660810-TP	24	16
SS-8660810-TP	26	32
SS-8660970-TP	8	67
SS-8660970-TP	8	68
SS-8660970-TP	10	41
SS-8660970-TP	10	58
SS-8660970-TP	22	18
SS-8660970-TP	24	17
SS-8660970-TP	26	31
SS-8661030-SP	18	11-2
SS-8680730-SP	6	2
SS-9090610-TP	8	48
SS-9111020-TP	12	42
SS-9111510-SP	27	17
SS-9121410-TP	8	50
SS-9150860-SP	19	4
SS-9151220-SR	17	25
SS-9151540-SR	17	24
SS-9151610-SR	17	25-1
SS-9182010-SN	17	17
SS-9661120-CP	17	4
SS-9661120-CP	26	40
SS-9661230-CP	6	7
TA-C850604-RO	4	1-1
TA-C900707-RO	2	26
TA-C900707-RO	2	27
TA-1050504-RO	2	20
TA-1250705-RO	2	21
TA-2101002-RO	2	24
WP-C371016-SD	8	30-1
WP-C450000-SD	2	4
WP-C450000-SD	16	49
WP-C480856-SP	26	18
WP-C500916-SD	8	51
WP-C500916-SD	10	2
WP-C501016-SC	19	8
WP-C501016-SD	27	19
WP-C520656-SA	20	15
WP-C550800-SF	16	42
WP-C560860-SE	20	18
WP-C560860-SE	21	14
WP-C612066-SP	26	64
WP-C621016-SD	19	5
WP-D650876-SD	8	45
WP-C651056-SD	2	3
WP-C671016-SE	27	3
WP-C740516-SP	10	22-1
WP-C871602-SE	27	12
WP-1021016-SD	8	28-1
WP-1051416-SD	8	19
WP-1702600-SD	20	4
WS-C441040-KP	18	12-2
WS-C441040-KP	27	20
WS-C521010-KN	20	14
WS-C521010-KN	20	21
WS-C531060-KR	21	15
WS-C621210-KR	27	2
WS-C641560-KR	21	3
WS-C861410-KR	27	11
WS-1002560-KR	21	19
WS-1643202-KR	20	12
WZ-C641510-KP	2	2
WZ-C850302-KO	8	10
WZ-1052010-KP	8	20
WZ-1052010-KP	8	33
WZ-1052010-KP	10	42
WZ-1052010-KP	24	22-1
100-00206	2	25
100-00859	2	54
100-01006	2	53
100-01105	2	17
100-01204	2	18
100-01303	4	21
100-01451	2	9
100-01600	2	19
100-01709	2	8
100-01808	2	13
100-01907	2	10
100-02004	2	11
100-02103	4	7
100-02202	4	8
100-02400	4	23
100-04208	4	9
100-04307	4	3
100-04356	4	2
100-04802	2	15-1
100-04901	2	15-2
100-05056	2	47
100-05304	2	52
100-05353	2	45
100-05452	2	39
100-05460	2	32
100-05650	2	37
100-05809	2	34
100-05908	2	38
100-05916	2	38
100-06005	2	40
100-06104	2	36
100-06252	2	33
100-06302	2	29
100-06401	2	30
100-06500	2	15
100-06807	2	15-3
100-06856	2	15
100-07003	18	8
100-07151	19	6
100-07169	18	1
100-07359	19	14
100-07409	18	16
100-07508	19	31
100-07854	2	33
100-08001	6	11
100-08100	6	12
100-08209	6	22
100-08308	6	18
100-08464	6	6
100-08506	6	1
100-08605	6	28
100-08753	6	27
100-08902	6	25
100-09009	6	24
100-10015	6	35-1
100-10114	6	40-1
100-10262	6	36-1
100-10304	6	32
100-10403	6	30
100-10502	6	33
100-11054	14	39
100-11401	8	57
100-11500	8	69
100-11609	8	63
100-11708	8	58
100-11807	8	47
100-12201	8	59
100-12300	8	53
100-12409	8	25
100-12508	8	24
100-12607	8	54
100-13019	6	48-1
100-13118	6	49-1
100-13266	6	46-1
100-13274	6	51
100-13407	6	50
100-13506	6	45
100-13605	6	43
100-13704	6	52
100-13803	6	53
100-13951	8	49
100-15006	8	41
100-15105	8	43
100-15253	8	38
100-15352	8	11
100-15360	8	11-1
100-15501	8	34
100-15659	8	32
100-15808	8	28
100-15907	8	29
100-15907	8	36
100-15907	24	27
100-16004	8	3
100-16012	8	3-1
100-16103	8	2
100-16202	8	4
100-16210	8	4-1
100-16608	8	60
100-16707	8	61
100-17150	8	7
100-17168	8	7-1
100-17309	8	14
100-17317	8	14-1
100-17408	8	15
100-17507	8	17
100-17606	8	22
100-17705	8	40
100-17804	8	36-1
100-18000	8	5-1
100-18109	8	5-2
100-19057	10	12
100-19156	10	15
100-19354	10	67
100-22010	10	10-1
100-22200	10	5
100-22358	10	7
100-22366	10	9-1
100-22408	10	31
100-22507	10	25
100-22606	10	38
100-24008	12	9
100-24107	12	10
100-24305	12	10-2
100-24701	12	10-3
100-25906	12	10-1
100-26060	12	13
100-26102	12	3
100-26201	12	11
100-26359	12	6
100-26409	12	15
100-26508	12	12
100-26607	12	2
100-26706	12	33
100-26805	12	30
100-26904	12	31
100-27001	12	28
100-27159	12	22
100-27209	12	43
100-27308	12	40
100-27407	12	39
100-27506	12	44
100-27654	12	41
100-28009	10	44
100-28108	10	55
100-28116	10	55-1
100-28207	10	59
100-28363	10	56
100-28405	10	62
100-28561	10	49
100-28603	10	52
100-28702	12	48
100-28801	12	46
100-28959	10	53
100-29064	12	54
100-29106	12	53
100-29205	12	56
100-29304	12	49
100-29452	10	63
100-29601	12	37
100-30005	14	28
100-30104	14	29
100-30203	14	37
100-30302	14	38
100-30401	14	42
100-30500	4	16
100-30658	14	35
100-31052	14	33

From the library of: Superior Sewing Machine & Supply LLC

Part No. 品番	Page 頁	Ref. No.
100-31102	14	32
100-31201	14	31
100-31300	14	23
100-31409	14	17
100-31508	14	24
100-31607	14	26
100-31706	14	25
100-31805	4	12
100-31904	4	11
100-32001	4	1
100-32555	14	10
100-33207	14	12
100-34007	14	8
100-34056	14	1
100-34106	14	4
100-34254	14	2
100-35053	16	23
100-35160	16	33-1
100-35202	16	32
100-35301	16	31
100-35459	16	15
100-35657	6	8
100-35707	16	11
100-35863	16	7
100-35905	16	10
100-36002	16	9
100-37059	16	22
100-37109	16	17
100-37208	12	19
100-37307	4	20
100-37406	4	18
100-38008	17	12
100-38057	17	8
100-38065	17	9
100-38107	17	13
100-38404	19	22
100-39006	19	1
100-39105	19	2
100-39204	19	6
100-39451	4	15
100-39659	19	7
100-41002	22	4
100-43065	22	7-1
100-43065	26	34
100-43461	22	6-1
100-43461	26	36
100-43461	26	42
100-43610	22	9-1
100-43610	26	37
100-43628	22	9-2
100-43628	26	37-1
100-44006	22	12
100-44006	26	29
100-44014	22	12-1
100-44014	26	29-1
100-44105	22	16
100-44105	24	15
100-44105	26	33
100-44204	22	11
100-44204	24	10
100-44204	26	28
100-44303	22	15
100-45052	22	1
100-45755	10	68
100-47009	22	5
100-50300	24	13
100-50300	26	17
100-51001	24	7
100-53056	24	19
100-53452	24	18
100-53502	24	25
100-53601	24	25-1
100-54005	24	11
100-54104	24	2
100-54104	26	14
100-54112	24	2-1
100-54203	24	3
100-54203	26	16
100-54302	24	23
100-54401	24	21
100-54500	24	14
100-55051	24	4
100-57008	24	8
100-61554	26	2
100-62107	26	22
100-62206	26	20
100-62701	26	11-2
100-62750	26	11-1
100-62800	26	11-3
100-63006	26	9
100-63105	26	10
100-63402	26	11
100-63451	26	3
100-63501	26	8
100-63600	26	6
100-63709	26	12
100-63857	26	43
100-64004	26	1
100-64103	26	26
100-64251	26	62
100-64301	26	66
100-64400	26	68
100-64509	26	69
100-64608	26	61
100-64707	26	50
100-64806	26	60
100-64905	26	39
100-65001	26	58
100-65100	26	24
100-65209	26	46
100-65308	26	47
100-65407	26	45

From the library of: Superior Sewing Machine & Supply LLC

From the library of: Superior Sewing Machine & Supply LLC

From the library of: Superior Sewing Machine & Supply LLC

JUKI

JUKI CORPORATION
HEAD OFFICE
8-2-1 KOKURYO-CHO,
CHOFU-CITY, TOKYO 182, JAPAN
BUSINESS OFFICE
1-23-3 KABUKI-CHO
SHINJUKU-KU, TOKYO 160, JAPAN
PHONE 03(3205)1188, 1189, 1190
FAX 03(3203)8260, (3205)9131
TELEX J22967, 232-2301

JUKI 株式会社
〒182 東京都調布市国領町8-2-1
TEL. 03-3480-1111(代表)
工業製品販売本部
TEL. 03-3480-1113(ダイヤルイン)

お買い求め、ご相談は
To order or for further information, please contact :

※このパーツリストは商品改良のため予告なく変更する事があります。
＊The description covered in this parts list is subject to change for improvement of the commodity without notice.
※このパーツリストは、1992年12月現在の商品仕様で編集・印刷したものです。
＊This parts list is edited and printed in accordance with the product specifications as of December 1992.

From the library of: Superior Sewing Machine & Supply LLC

Printed in Japan