Form 19393
(240)
Printed in U. S. A.

LIST
OF
PARTS

MACHINES
Nos. 114-28 and 114-29

THE SINGER MANUFACTURING COMPANY

From the library of: Superior Sewing Machine & Supply LLC

INSTRUCTIONS FOR OILING

To insure easy running and prevent unnecessary wear of the parts which are in movable contact, the machine requires oiling, and when in continuous use it must be oiled at least once each day with Singer "Oil for High Speed Sewing Machines (Cloth and Leather)" for general use, or "Stainless Oil for High Speed Sewing Machines" where a stainless oil is desired.

To reach the oiling points under the machine bed, remove the two front screws in the machine base; turn the machine back on its hinges and pull out the cover on the underside of the machine bed.

Copyright, U. S. A., 1926 and 1940
by The Singer Manufacturing Co.
All Rights Reserved for all Countries

From the library of: Superior Sewing Machine & Supply LLC

INDEX

	Page
Attachments and Accessories	19
Eye and Finger Guard	20
Foot Lifter Parts	21
Machine No. 114-28	5
Machine No. 114-29	18
Numerical List of Parts	23
Starting Lever	21
Table Belt Guide	22
Thread Unwinder	22

From the library of: Superior Sewing Machine & Supply LLC

INSTRUCTIONS FOR ORDERING

In ordering from this list, use ONLY the part NUMBER in the FIRST column.

The number stamped on a Sewing Machine Part is in every case the number of the single part only.

Every combination of parts sent out as such has its specific number, which, although not stamped on the parts, must be used when ordering the combination.

Each number always indicates the SAME PART in whatever list it appears, or for whatever machine.

The letters after some of the numbers indicate the style of finish only, as follows:

A-Hardened, Polished, Nickel Plated and Buffed
A.A-Buffed and Chromium Plated
A.B-Hardened, Polished, Buffed and Chromium Plated
A.C-Brown Baking Enamel Finish
A.D-Gray Baking Enamel Finish
A.E-Hardened, Bright Rumbled and Nickel Plated
A.F-Hardened, Bright Rumbled, Nickel Plated, Bright Rumbled and Chromium Plated
B-Polished, Nickel Plated and Buffed
C-Hardened Only
C.R-Hardened and Merlized
D-Polished Only
E-Soft, Not Polished
F-Hardened and Polished
F.J-Hardened, Polished and Nickel Plated
G-Bright Rumbled and Nickel Plated
H-Blued
J-Nickel Plated Only
K-Hardened and Nickel Plated
L-Brass Plated
M-Oxidized
N-Japanned, Dull
P-Japanned, Bright
P.P-Wrinkle Finish
R-Merlized
S-Cadmium Plated
T-Copper Plated
T.A-Hardened, Polished, Copper and Nickel Plated and Buffed
T.B-Copper and Nickel Plated and Polished
T.J-Copper and Nickel Plated Only
T.K-Hardened, Copper and Nickel Plated
T.L-Copper and Brass Plated
T.M-Copper Plated and Oxidized
U-Zinc Plated
V-Silver Plated
W-Polished and Nickel Plated
X-Black Oxide, for Iron and Steel
X.C-Hardened and Black Oxide, for Iron or Steel
Y-Black Nickel Plated Only
Z-Chromium Plated
Z.A-Hardened,Polished,Nickel Plated,Buffed and Chromium Plated
Z.B-Polished, Nickel Plated, Buffed and Chromium Plated
Z.C-Hardened and Chromium Plated
Z.D-Polished and Chromium Plated
Z.G-Bright Rumbled, Nickel Plated, Bright Rumbled and Chromium Plated
Z.J-Nickel and Chromium Plated
Z.T-Copper and Chromium Plated

These letters MUST BE USED when they appear in the list; and AFTER the number as in the list.

In this series:

1 to 1500, 50001 to 51500 and 140001 to 142000 are Screw Numbers
1501 to 1800 and 51501 to 51800 are Nut Numbers
1801 to 2000 and 51801 to 52000 are Roller Numbers
2001 to 50000 and 52001 to 140000 and 142001 to 190000 are Sewing Machine Parts, 190001 and upward are numbers of Electrical Parts.

The figures in the second column refer only to the plates, illustrating the parts, and are NOT TO BE USED in ordering.

Parts marked with an asterisk (*) are furnished only when repairs are made at factory.

From the library of: Superior Sewing Machine & Supply LLC

LIST OF PARTS COMPLETE

FOR

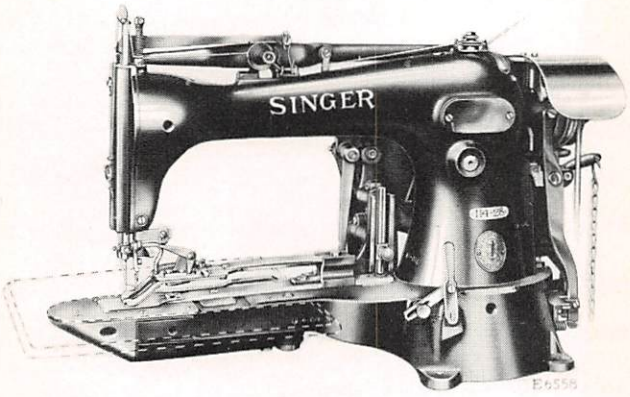

MACHINE No. 114-28

For Sewing Two or Four Hole Buttons, from 10 to 50 ligne. Makes cross stitches in four hole buttons and can be adjusted for two hole and bar buttons. Makes 14 stitches, including the fastening stitch. Thread cutter. Clamp vibrates Across the cylinder. Speed 1500 R. P. M.

No.	Plate	Name
*124845	-----	Arm
*62295	-----	" 124845 with 4449, 15404, 124793 and two each 164E and 15405.....
16532	23167	Arm Dowel Pin.....
4448	23167	" Oil Tube. for intermediate bearing..
136594	-----	Arm Oil Tube, for oiling Needle Bar Con-706
880E	23167	" necting Link (upper) Bearing.....
59702	23167	" Shaft (horizontal).....
*136540	-----	Arm Shaft (horizontal) 59702 with 59757,74, 59774 and 68717 ...
17703	23167	Arm Shaft (horizontal) Bushing (back)...
50333C	23167	" " " " " Adjusting Screw.....
1520J	23167	Arm Shaft (horizontal) Bushing (back) Adjusting Screw Nut.....

From the library of: Superior Sewing Machine & Supply LLC

No.	Plate	Name
*4449	-----	Arm Shaft (horizontal) Bushing (front)..
59703	23167	" " " Gear with two 1036C
1036C	23167	" " " " Set Screw.....
59704	23167	" " (upright).....
59705	23167	" " " Bushing (lower).....
446C	23167	" " " " " Set Screw.....
59706	23167	Arm Shaft (upright) Bushing (upper).....
446C	23167	" " " " " Set Screw.....
59707	23167	Arm Shaft (upright) Gear (lower) with two 1253C.....
1253C	23167	Arm Shaft (upright) Gear (lower) Set Screw.....
59708	23167	Arm Shaft (upright) Gear (upper) with two 1253C.....
1253C	23167	Arm Shaft (upright) Gear (upper) Set Screw.....
124674	23167	Arm Side Cover.....
190J	23167	" " " Screw.....
18498	23167	Belt Cover.....
59795	23167	" " Bracket with 184E and 59796..
184E	23167	" " " Screw Stud.....
59796	23167	" " " Stud.....
217J	23167	" " Screw.....
39222	23153	" Shifter.....
63976	23153	" " Clamp.....
1255D	23153	" " " Screw.....
124712	9596	Brake.....
124713	-----	" 124712 with four 56493.....
124714	9596	" Adjusting Plate.....
124715	9596	" " " Handle.....
124716	-----	" " " " 124715 with 124717.....
50435J	9596	Brake Adjusting Plate Handle Hinge Screw
124717	9596	" " " " Shaft.....
124718	9596	" " " " " Crank with 1253C.....
1253C	9596	Brake Adjusting Plate Handle Shaft Crank Set Screw.....
51224W	9596	Brake Adjusting Plate Thumb Screw.....
124719	9596	" " " " " Bushing
124720	9596	" Arm.....
1403D	9596	" " Hinge Screw.....
124902	23153	" " Releasing Lever.....
124901	-----	" " " " 124902 with 124903 and two 792C.....
124903	23153	Brake Arm Releasing Lever Bracket.....
792C	23153	" " " " " Screw.
176J	23153	" " " " Screw.....

From the library of: Superior Sewing Machine & Supply LLC

No.	Plate	Name
50446D	9596	Brake Hinge Screw.....
56493	9596	" Pad (leather).....
124846	9596	" Spring.....
39238	23168	Button Clamp (left) with 9311 and 17723.
39239	23168	" " (right) with 9311 and 17723
124732	23168	" " Arm with 17714 and 124780..
17710	23168	" " " Hinge Plate.....
1176J	23168	" " " " " Screw.....
124780	23168	" " " Hook.....
1175E	23168	" " Hinge Screw.....
124906	23172	" " Lifter.....
190J	23172	" " " Screw.....
124711	23166	" " Locking Device Latch with two 1057J.....
1057J	23166	Button Clamp Locking Device Latch Clamping Screw.....
124678	23166	Button Clamp Locking Device Latch Shaft.
124679	23166	" " " " " " Crank.....
124680	23166	Button Clamp Locking Device Latch Shaft Crank Connection.....
1282C	23166	Button Clamp Locking Device Latch Shaft Crank Connection Hinge Screw (lower)
1282C	23166	Button Clamp Locking Device Latch Shaft Crank Connection Hinge Screw (upper)
124823	23166	Button Clamp Locking Device Latch Shaft Crank Pin.....
124733	23168	Button Clamp Opening Lever.....
124734	23168	" " " " Bracket.....
1182J	23168	" " " " " Screw
124735	23172	" " " " Contact Piece
124736	23172	" " " " " " Arm.....
50117J	23172	Button Clamp Opening Lever Contact Piece Arm Screw.....
1484J	23172	Button Clamp Opening Lever Contact Piece Screw.....
17718	23172	Button Clamp Opening Lever Contact Piece Screw Washer.....
99R	23168	Button Clamp Opening Lever Hinge Screw..
39241	23168	" " Pressure Spring.....
17713	23168	" " " " Bracket....
1177D	23168	" " " " " Screw
17714	23168	" " " " Guide Block
1178D	23168	" " " " Screw.....
20437	23168	" " " " " Washer
39242	23168	" " Spreader.....
124737	23168	" " " Lever.....
124738	23168	" " " " Adjusting Plate.....

From the library of: Superior Sewing Machine & Supply LLC

No.	Plate	Name
1182J	23168	Button Clamp Spreader Lever Adjusting Plate Screw.....
17718	23168	Button Clamp Spreader Lever Adjusting Plate Screw Washer.....
124739	23168	Button Clamp Spreader Lever Stop.....
50237F	23168	" " " " " Position Screw.....
1182J	23168	Button Clamp Spreader Lever Stop Screw..
17718	23168	" " " " " " Washer.....
1182J	23168	Button Clamp Spreader Screw.....
17719	23168	" " " Spring.....
1181J	23168	" " " " Screw Stud
17720	23168	" " " Steady Pin.....
39244	23168	" " Spring (left).....
39245	23168	" " " (right).....
226J	23168	" " " Screw.....
9311	23168	" " " Steady Pin.....
39248	23168	" " Stop with two 17720.....
1183J	23168	" " " Screw.....
17723	23168	" " Stud.....
124740	-----	Button Clamp complete, Nos. 99R, 1181J, 1183J, 17719, 39238, 39239, 39242, 39244, 39245, 39248, 50237F, 124732 to 124734,124737 to 124739, two each 226J, 1175E, 17718 and five 1182J...
*62180	-----	Cloth Plate with 62181.....
*62181	-----	" " Button Tray.....
62102	23169	" " Guide Block (left).....
742F	23169	" " " " " Screw....
1547J	23169	" " " " " " Nut
62103	23169	" " " " (right).....
3021	23169	" " " " " Rivet...
190J	23169	" " Screw.....
62104	23169	" " Stop.....
26770	23169	" " " Rivet.....
62182	23169	Cloth Plate complete, Nos. 742F, 1547J, 26770, 62102 to 62104, 62180 and two 3021.....
*124741	-----	Cylinder with 124719.....
62189	23169	" Bottom Cover.....
124742	23169	" End Cover.....
124743	23169	" " " 124742 with 1034D, 62111,62113,62185,62189,124744 and four 1477D.....
62185	23169	Cylinder End Cover Bracket.....
62111	23169	" " " " Hinge Pin....
1477D	23169	" " " " Screw.....
124744	23169	" " " Hinge.....
1477D	23169	" " " " Screw.....

From the library of: Superior Sewing Machine & Supply LLC

No.	Plate	Name
62113	23169	Cylinder End Cover Spring.....
1034D	23169	" " " " Screw.....
124745	23167	" Oil Well Cover.....
236D	23167	" " " " Screw.....
59711	23172	Face Plate.....
59712	23172	Face Plate complete, Nos . 208D, 9544, 9545, 59711 and two each 229D, 2107 and 9543.....
164J	23172	Face Plate Screw.....
2107	23172	" " Thread Guard.....
229D	23172	" " " " Screw.....
9543	23172	" " " Nipper Disc.....
9544	23172	" " " " " Cover.....
208D	23172	" " " " " " Screw
9545	23172	" " " " " Spring....
63940	23171	Feed Across Connection (lever end) with two 896E.....
63941	-----	Feed Across Connection (lever end) 63940 with 55381.....
55381	23171	Feed Across Connection (lever end) Ball Stud.....
641C	23171	Feed Across Connection (lever end) Ball Stud Set Screw.....
63942	23171	Feed Across Connection (regulator end) with two 896E.....
63943	-----	Feed Across Connection (regulator end) 63942 with 63944.....
63944	23171	Feed Across Connection (regulator end) Ball Stud.....
62115	23171	Feed Across Connection Adjusting Stud...
1649C	23171	" " " " " Nut (left).....
1650C	23171	Feed Across Connection Adjusting Stud Nut (right).....
896E	23171	Feed Across Connection Cap Screw.....
62147	23171	" " Lever with 641C and 1952....
124676	-----	" " " 62147 with 17737.....
17737	23171	" " " Hinge Stud.....
160J	23171	" " " " " Clamping Screw.....
62118	23168	Feed Across Lever Plate with 17741.....
62119	23168	" " " " Cover.....
1094E	23168	" " " " Screw.....
55300	23168	" " " " Steady Pin.....
1952	23171	" " " Roller and Stud.....
124865	23171	" " Regulator.....
124866	-----	" " " 124865 with 1188D, 1655E, 14017 and 50324C.....
50599D	23171	Feed Across Regulator Adjusting Screw Stud.....

From the library of: Superior Sewing Machine & Supply LLC

No.	Plate	Name
1676C	23171	Feed Across Regulator Adjusting Screw Stud Nut.....
46244	23171	Feed Across Regulator Adjusting Screw Stud Nut Washer (fibre).....
17738	23171	Feed Across Regulator Adjusting Screw Stud Nut Washer (steel).....
1188D	23171	Feed Across Regulator Hinge Screw.....
62121	23171	" " " Link.....
50324C	23171	" " " " Screw Stud...
1655E	23171	" " " " " " Nut
14017	23171	" " " " " " " Washer.....
17741	23168	Feed Across Regulator Link Stud.....
124690	23169	" Cam with two 1192C, three each 190J, 17874, 124616, 124622 and twelve 335J.
18415	23167	Feed Cam Driving Worm with 1441C and 1442C.....
1442C	23167	Feed Cam Driving Worm Position Screw....
1441C	23167	" " " " Set Screw.....
17797	23169	" " " " Wheel with 453C...
18384	23169	" " " " " Pin.....
453C	23169	" " " " " Set Screw...
18384	23169	" " Pin.....
1192C	23169	" " Set Screw.....
62155	23169	" " Shaft.....
62264	-----	" " " 62155 with 1653C and 17797
1653C	23169	" " " Nut.....
62297	23168	" Plate for four hole buttons.....
124747	-----	" " " two hole buttons.....
*18445	-----	" " Carrier Bar.....
62123	23168	" " " " 18445 with 934J, 1094F, 1195E, 8505, 17743, 18368, 62118, 62119, two 55300 and four 17806....
59730	23168	Feed Plate Carrier Bar Pivot Block.....
50306D	23168	" " " " " " Screw
18368	23168	" " " " Plate.....
934J	23168	" " " " " Screw.....
1654C	23168	" " Nut.....
17806	23168	" " Position Stud.....
1195E	23168	" " Screw Stud.....
8505	23168	" " " " Rivet.....
17742	23171	" Regulator with 1953.....
62117	23171	" " Bracket with three 160J..
160J	23171	" " " Cap Screw.....
8589	23171	" " " Dowel Pin.....
1177D	23171	" " " Screw.....
17744	23168	" " Hinge Stud.....
17743	23168	" " Post.....
1953	23171	" " Roller and Screw Stud with 1655C and 14017.....

From the library of: Superior Sewing Machine & Supply LLC

No.	Plate	Name
1655C	23171	Feed Regulator Roller and Screw Stud Nut
14017	23171	" " " " " " " Washer
1190C	23168	Feed Regulator Stop Screw
17745	23168	" " Swivel
1191D	23168	" " Thumb Screw
124907	23173	Knife
665J	23173	" Screw
136545	23173	Loop Finger
136546	23167	" " Cam with 50274C
124824	23173	" " Carrier
124797	-----	" " " 124824 with 124753
124752	23173	" " " Crank with 208J and 124755
208J	23173	Loop Finger Carrier Crank Clamping Screw
124753	23173	" " " Holder
208J	23173	" " " " Screw
124754	23173	" " " Pitman with four 218J
124791	-----	" " " " 124754 with 124752 and 124757
124755	23173	Loop Finger Carrier Pitman Ball Stud
218J	23173	" " " " Cap Screw
124757	23173	" " Driver with 51868 and 124755
124978	23167	" " " Cam with two 50150C
50150C	23167	" " " " Set Screw
50183D	23173	" " " Hinge Screw
51868	23173	" " " Roller and Stud
124759	23167	" " Rocking Frame
229J	23173	" " Screw
62298	23167	Looper with 34418
124761	23167	" Driving Shaft
124762	23167	" " " Bushing
52045	23167	" " " " Packing (cotton)
1143C	23167	Looper Driving Shaft Bushing Set Screw
59707	23167	" " " Gear with two 1253C
59747	23167	" " " " Cover
190J	23167	" " " " " Screw
1253C	23167	" " " " Set Screw
50274C	23167	" Set Screw
124763	23167	" Shaft
124764	23167	" " Bushing
50189C	23167	" " " Set Screw
124765	23167	" " Coupling with four 50150C
50150C	23167	" " " Set Screw
34418	23167	" Washer
62299	23172	Needle Bar with 1072F
*39203	-----	" " Connecting Link
136593	-----	Needle Bar Connecting Link 39203 with 1th 377C, 1518J and 136592

From the library of: Superior Sewing Machine & Supply LLC

No.	Plate	Name
377C	23172	Needle Bar Connecting Link Hinge Screw..
1518J	23172	" " " " " " Nut
136592	-----	Needle Bar Connecting Stud with 202E LE....
202 ~~301E~~	~~23172~~	" " " " Set Screw....
59757 ~~22235~~	~~23167~~	" " Crank Wheel with 446C and 1293C.....
1293C	23167	Needle Bar Crank Wheel Position Screw...
446C	23167	" " " " Set Screw.....
124794	23172	" " Thread Retainer.....
124795	-----	Needle Bar Thread Retainer complete,Nos. 1449H,124794,124796 and 124821.....
124796	23172	Needle Bar Thread Retainer Bracket with 853C and two 42639.....
853C	23172	Needle Bar Thread Retainer Bracket Set Screw.....
42639	23172	Needle Bar Thread Retainer Position Pin.
1449H	23172	" " " " Screw.....
124821	23172	" " " " Spring.....
124979	23167	" Guard.....
124980	23167	" " Cam with two 465C.....
465C	23167	" " " Set Screw.....
2273	23167	" " Pin.....
124767	23167	" " Shaft.....
124983	-----	" " " 124767 with 2273 and 124979.....
59761	23167	Needle Guard Shaft Collar with two 465C.
465C	23167	" " " " Set Screw.....
124602	23167	" " " Crank with 124974 and two 1253C.....
51857	23167	Needle Guard Shaft Crank Roller.....
124974	-----	Needle Guard Shaft Crank Roller complete, Nos. 51857, 124698 and 124699.....
124698	23167	Needle Guard Shaft Crank Roller Bushing.
124699	23167	" " " " " " Stud.....
1253C	23167	Needle Guard Shaft Crank Set Screw.....
59765	23167	" " " Spring.....
59766	23167	" " " " Collar with 624C
624C	23167	" " " " " Set Screw
233J	23167	" " " " Screw.....
124768	23167	" " Spreader.....
233J	23167	" " " Screw.....
1072F	23172	" Set Screw.....
2058	23172	Presser Bar.....
124769	23166	" " Collar and Thread Pull-off Bracket with two 196C.....
196C	23166	Presser Bar Collar Set Screw.....
17842	23172	" " Guide Bracket with 453C.....
453C	23172	" " " " Set Screw.....
124790	23166	" " Lifting Lever.....

From the library of: Superior Sewing Machine & Supply LLC

No.	Plate	Name
124793	23166	Presser Bar Lifting Lever Bracket.....
164E	23166	" " " " " Screw.
1201D	23166	" " " " Hinge Screw...
17845	23166	" " " " Rod.....
17846	23166	" " " " " Chain.....
32675	23172	" " Spring.....
68712	23167	Pulley (loose) 2 3/4 in. diam., with 200584D.....
68713	-----	Pulley (loose) 68712 with 68714.....
68714	23167	" " Ball Bearing.....
68715	23167	" " Bushing.....
51387R	23167	" " Cap Screw.....
200584D	23167	" " Oil Hole Plug Screw.....
68716	23167	" (tight) 2 7/8 in. diam.....
68720	-----	" " 68716 with 1206C and 17854
68717	-----	Pulleys (ball bearing) complete, Nos. 51387R, 68713, 68715 and 68720.....
17853	23153	Starting Lever.....
1262C	23153	" " Hinge Screw.....
1662C	23153	" " " " Nut.....
17854	23167	Stop Cam.....
17855	23153	" " Interlocking Rod.....
124784	23153	" " " " Case.....
124770	-----	" " " " " 124784 with 124774,124901 and two 176J.....
124904	-----	Stop Cam Interlocking Rod Case 124770 with 63976 and two 1255D.....
124771	-----	Stop Cam Interlocking Rod Case 124904 with 1318D,17855,17863,17864,39222 and 68739.....
124772	23153	Stop Cam Interlocking Rod Case Bracket..
124773	-----	Stop Cam Interlocking Rod Case Bracket complete, Nos. 1182E, 1196C, 1204E, 1254C,1262C,1508J,1662C,17853,17859, 17861, 17862, 17872, 17873, 124771, 124772 and two 898D.....
21828	23153	Stop Cam Interlocking Rod Case Bracket Dowel Pin.....
50372D	23153	Stop Cam Interlocking Rod Case Bracket Screw.....
1204E	23153	Stop Cam Interlocking Rod Case Hinge Screw.....
17859	23153	Stop Cam Interlocking Rod Case Socket Joint.....
898D	23153	Stop Cam Interlocking Rod Case Socket Joint Cap Screw.....
11622	9596	Stop Cam Interlocking Rod Case Spring...
19694	9596	" " " " " " Hook.....
1695C	9596	Stop Cam Interlocking Rod Case Spring Hook Lock Nut.....

From the library of: Superior Sewing Machine & Supply LLC

No.	Plate	Name
17861	23153	Stop Cam Interlocking Rod Case Stop Stud
1254C	23153	" " " " " " " Screw Bushing
1508J	23153	Stop Cam Interlocking Rod Case Stop Stud Screw Bushing Lock Nut
17862	23153	Stop Cam Interlocking Rod Case Stop Stud Spring
124774	23153	Stop Cam Interlocking Rod Case Wearing Block
17863	23153	Stop Cam Interlocking Rod Spring
17864	23153	" " " " Stop
1318D	23153	" " " " " Screw
68739	23153	" " " " " " Washer
3012	23167	Stop Cam Pin
1206C	23167	" " Screw
2102	23166	Tension Disc
1560C	23166	" Regulating Thumb Nut
50148C	23166	" Screw Stud
124687	-----	" " " 50148C with 1560C
42336	23166	" Spring
13915	23166	" " Bushing
124775	23166	" Thread Guide
50370J	23166	" " " Set Screw
124850	23173	Thread Breaker
62124	23167	" " Bar with 62130 and two 3021
124933	9596	Thread Breaker Bar Check
124934	9596	" " " " Plunger
124935	9596	" " " " " Case
1186D	9596	" " " " " " Screw
1722D	9596	Thread Breaker Bar Check Plunger Lock Nut
1722D	9596	Thread Breaker Bar Check Plunger Nut
124938	9596	" " " " " Spring
51120J	9596	" " " " Regulating Screw
51591J	9596	" " " " " " Lock Nut
50152D	9596	Thread Breaker Bar Check Screw
124936	-----	Thread Breaker Bar Check complete, Nos. 51120J, 51591J, 124933 to 124935, 124938 and two 1722D
62126	9596	Thread Breaker Bar Connection with 17917
17915	9596	" " " " Slide Block
17917	-----	" " " " " " 17915 with 17916
17916	9596	Thread Breaker Bar Connection Slide Block Stud
59734	9596	Thread Breaker Bar Driving Lever with 223F and 59735

From the library of: Superior Sewing Machine & Supply LLC

No.	Plate	Name
1382F	9596	Thread Breaker Bar Driving Lever Hinge Screw
1681C	9596	Thread Breaker Bar Driving Lever Hinge Screw Nut
59735	9596	Thread Breaker Bar Driving Lever Lock Stud
223F	9596	Thread Breaker Bar Driving Lever Lock Stud Screw
124787	23173	Thread Breaker Bar Guide
1235F	23173	" " " " Screw
124908	23173	" " Holder with 59739
62129	23173	" " " Cap with 59739
50018F	23173	" " " " Screw
1547J	23173	" " " " " Nut
59739	23173	" " " " Stud
62130	23167	" " " Connection
3021	23167	" " " " Rivet
59739	23173	" " " Stud
236F	23173	" " Screw
124609	23172	" Controller Sleeve
124607	23172	" " Spring
124608	23172	" " " Collar with 1477F
1477F	23172	Thread Controller Spring Collar Set Screw
124610	23172	Thread Controller Stud
457C	23172	" " " Set Screw
124611	-----	Thread Controller complete, Nos. 124607 to 124610
*124612	-----	Thread Nipper (lower) Blade
*124613	-----	" " " " Carrier with 124619
124614	23166	Thread Nipper (lower) Blade Carrier 124613 with 124612 and two 6037
665J	23166	Thread Nipper (lower) Blade Carrier Cap Screw
124615	23173	Thread Nipper (lower) Blade Carrier Hinge Stud
6037	23166	Thread Nipper (lower) Blade Rivet
124616	23169	" " " Cam
335J	23169	" " " " Screw
124653	23166	" " " Connection
124618	23166	" " " " Extension
99K	23166	" " " " " Hinge Screw
206J	23166	Thread Nipper (lower) Connection Extension Screw
124619	23166	Thread Nipper (lower) Connection Hinge Stud
124620	23166	Thread Nipper (lower) Driving Arm

From the library of: Superior Sewing Machine & Supply LLC

No.	Plate	Name
8554	23166	Thread Nipper (lower) Driving Arm Pin...
124621	23166	" " " Lever with 237K...
124622	23169	" " " " Guide.....
335J	23169	" " " " " Screw
8554	23166	" " " " Pin.....
237K	23166	" " " " Set Screw...
124623	23166	" " " " Shaft.....
124957	23166	" " " " " Bracket
51188J	23166	" " " " " " Screw.....
17738	23166	Thread Nipper (lower) Lever Shaft Bracket Screw Washer.....
1743D	23166	Thread Nipper (upper) Adjusting Thumb Nut.....
59773	23166	Thread Nipper (upper) Body.....
447C	23166	" " " " Set Screw....
59774	23167	" " " Cam with two 50150C
50150C	23167	" " " " Set Screw.....
2921	23166	" " " Disc.....
12162	23166	" " " " Guide Pin.....
62169	23166	" " " " Spring.....
59775	23166	" " " Eyelet.....
1527D	23166	" " " Lock Nut.....
59776	23166	" " " Stud with 13538....
13538	23166	" " " " Position Pin..
13539	23166	" " " " Roller.....
13540	23166	" " " " " Pin....
2026	23166	" " " " Spring.....
59777	-----	Thread Nipper (upper) Stud complete,Nos. 13539, 13540 and 59776.....
59778	23166	Thread Nipper (upper) complete, Nos. 1527D,1743D,2026,59773,59775,59777, 62169 and two 2921.....
124776	23166	Thread Pull-off.....
202J	23166	" " Screw.....
7071	23166	" " " Washer.....
124625	23172	" Take-up Body with 62172.....
42808	23172	" " Roller.....
62171	23172	" " " Cap.....
337J	23172	" " " " Screw.....
62172	23172	" " " Pin.....
124626	-----	Thread Take-up complete, Nos. 337J,42808, 62171 and 124625.....
691F	23172	Thread Take-up Screw.....
39452	23172	" Wiper Body.....
124806	23172	" " " Finger.....
330J	23172	" " " " Screw.....
1207D	23172	" " " Hinge Screw.....
124777	23172	" " " Support.....
641C	23172	" " " " Set Screw....

From the library of: Superior Sewing Machine & Supply LLC

No.	Plate	Name
39455	23172	Thread Wiper Body Wire.....
39456	23172	" " " " Clamp.....
1302D	23172	" " " " " Screw.....
124909	23173	Throat Plate with 124615.....
124981	23173	" " Needle Guard.....
206J	23173	" " " " Screw.....
124982	23173	Throat Plate complete, Nos. 665J, 1547J, 50018F,62129,124850,124907 to 124909, 124981 and two each 206J and 236F...
691F	23173	Throat Plate Screw.....
17872	23153	Trip Lever.....
1196C	23153	" " Hinge Screw.....
17873	23153	" " Spring.....
1182E	23153	" " " Screw.....
17874	23169	Tripping Point.....
190J	23169	" " Screw.....
*15404	-----	Trade Mark.....
15405	-----	" " Rivet.....

From the library of: Superior Sewing Machine & Supply LLC

MACHINE No. 114-29

For Sewing Two or Four Hole Buttons, from 10 to 50 ligne. Makes cross stitches in four hole buttons and can be adjusted for two hole and bar buttons. Makes 21 stitches, including the fastening stitch. Thread cutter. Clamp vibrates Across the cylinder. Speed 1500 R. P. M.

NOTE: THIS MACHINE IS THE SAME AS THE NO. 114-28 MACHINE, WITH THE FOLLOWING EXCEPTIONS:

No.	Plate	Name
124688	23170	Feed Cam with two each 190J,1192C,17874, 124616,124630 and ten 335J,in place of 124690.....
124630	23170	Thread Nipper (lower) Lever Guide, in place of 124622.....

From the library of: Superior Sewing Machine & Supply LLC

ATTACHMENTS AND ACCESSORIES

No.	Plate	Name
59797	23174	Button Tray with two wood screws 1 1/4 in. No.14.....
124958	23157	Cylinder Base Plate with two 453C.....
18420	23157	" " " Hinge Connection....
18423	23157	" " " " " Hinge Pin.....
453C	23157	Cylinder Base Plate Hinge Connection Hinge Pin Set Screw.....
134E	23157	Cylinder Base Plate Screw.....
124959	23157	Cylinder Base Plate (hinged) complete, Nos. 124958, two each 18420, 18423, three wood screws 1 1/4 in. No. 12 and four 134E.....
124975	-----	Cylinder Base Plate 124959 with 124966..
124960	23157	Machine Supporting Bracket (lower).....
178J	23157	" " " " Screw
124961	23157	" " " (upper).....
1396J	23157	" " " " Screw
124962	23157	" " Link (lower).....
124963	23157	" " " (upper).....
124964	23157	" " " Hinge Rivet.....
124965	23157	" " " Lock Plate.....
190333	23157	" " " " " Lock Stud.....
124964	23157	Machine Supporting Link Lock Plate Rivet
124966	23157	Machine Support complete, Nos. 178J, 1396J,124960 to 124963,124965,190333 and four 124964.....
120346	23157	Oiler (copper plated) with 120347.....
120347	23157	" Spout, 8 1/2 in. long.....
11831	23157	Screw Driver (large).....
26026	23157	" " (small).....
4822	23157	Wrench for 1547.....
10875	23157	" " 1518,1520,1649,1650 and 1662.
17905	23157	" " 1176,1178,1654,1655 and 1676.
25200	23157	" " 1527.....
27662	23157	" " 1254 and 1508.....

From the library of: Superior Sewing Machine & Supply LLC

EYE AND FINGER GUARD

No.	Plate	Name
121603	23158	Eye and Finger Guard (glass).....
121604	23158	Carrying Arm.....
1004K	23158	" " Hinge Screw (back).....
1698J	23158	" " " " " Nut.....
50222K	23158	" " " " (front).....
1735J	23158	" " " " " Nut....
121605	23158	" " Spring.....
50435K	23158	Depressing Screw.....
121606	23158	" " Holder.....
140061J	23158	" " " Screw.....
121607	23158	Frame.....
121608	-----	" 121607 with 121603.....
50165J	23158	" Screw.....
121609	23158	Guiding Rod.....
50435K	23158	" " Hinge Screw.....
121611	23158	Holder.....
121612	23158	Supporting Bracket.....
191J	23158	" " Screw.....
121613	-----	Eye and Finger Guard complete, Nos.1004K, 1698J,1735J,50222K,50435K,121604, 121605,121608,121609,121611,121612 and two 50165J.....
136586	23158	Face Plate.....
2107	23158	" " Thread Guard.....
229J	23158	" " " " Screw.....
9543	23158	" " " Nipper Disc.....
9544	23158	" " " " " Cover.....
208J	23158	" " " " " " Screw
9545	23158	" " " " " Spring....
136587	-----	Face Plate complete, Nos.208J,9544,9545, 136586 and two each 229J, 2107 and 9543.....
121627	23158	Eye and Finger Guard with Face Plate complete, Nos. 50435K,121606,121613, 136587, 140061J and two 191J.....

From the library of: Superior Sewing Machine & Supply LLC

FOOT LIFTER PARTS

No.	Plate	Name
17876	23159	Treadle with 443C.....
17877	23159	" Pitman Rod (lower).....
17878	23159	" " " (upper).....
17879	23159	" " " Clamp with two 161E..
161E	23159	" " " " Screw.....
17880	-----	Treadle Pitman complete, Nos. 17877 to 17879.....
17881	23159	Treadle Shaft.....
443C	23159	" " Set Screw.....
17882	23159	" Spring.....
17883	23159	" Stand.....
17884	23159	Treadle complete, Nos. 17876, 17881 to 17883 and two wood screws 1 in. No. 10.....
17885	-----	Treadle and Pitman complete, Nos. 17880 and 17884.....

STARTING LEVER

No.	Plate	Name
13351	23159	Chain, 46 in. to 55 in. long, with 56864 and 56865.....
		Note: When ordering 13351, give length required.
56864	23159	Chain Hook (large).....
56865	23159	" " (small).....
17876	23159	Treadle with 443C.....
17881	23159	" Shaft.....
443C	23159	" " Set Screw.....
17882	23159	" Spring.....
17883	23159	" Stand.....
17884	23159	Treadle complete, Nos. 17876, 17881 to 17883 and two wood screws 1 in. No. 10.....

From the library of: Superior Sewing Machine & Supply LLC

TABLE BELT GUIDE

No.	Plate	Name
39218	23159	Belt Guide with two 168E.....
168E	23159	" " Set Screw.....
17892	23159	Bracket with two 153E.....
17893	23159	Pulley.....
39219	23159	" Shaft (long) with 17896 and 63973
63973	23159	" " " Wick (braided cotton)
39220	23159	" " (short) with 17896 and 63974
63974	23159	" " " Wick (braided cotton)
17896	23159	" " Plug.....
153E	23159	" " Set Screw.....
39221	23159	Table Belt Guide complete, Nos. 17892, 39219, 39220, two each 17893, 39218 and three wood screws 1 1/4 in. No. 12.....

THREAD UNWINDER

FOR ONE LARGE SPOOL OR ONE LARGE CONE OF THREAD

No.	Plate	Name
225259	23160	Spool Rest with 201018C.....
150203	23160	" " Cushion (felt).....
225388	23160	" " Rod.....
200383C	23160	" " " Set Screw.....
201018C	23160	" " Set Screw.....
202490	23160	" Stand with 200383C.....
225391	23160	Thread Guide.....
60771	23160	" Guide.....
60772	-----	" " 60771 with 41635.....
41635	23160	" " Bracket with 175E.....
175E	23160	" " " Set Screw.....
201696J	23160	" " Lock Nut.....
225326	23160	" " Position Cup.....
225324	23160	" " Rod with 208E and 225322...
208E	23160	" " " Screw.....
225322	23160	" " " Washer.....
225260	-----	Thread Unwinder complete, Nos. 150203, 201696J,202490,225259,225324,225326, 225388,225391 and three wood screws 7/8 in. No. 12.....
27739	23160	Thread Cone (wood) for large cones.....
225390	23160	" " Holder, for inverted cones..

Note: Nos. 27739 and 225390 are used with, but not included in 225260.

60773	23160	Thread Unwinder with Thread Guide complete, Nos. 60772 and 225260.....

From the library of: Superior Sewing Machine & Supply LLC

NUMERICAL LIST OF PARTS

From the library of: Superior Sewing Machine & Supply LLC

NUMERICAL LIST OF PARTS

No.	Plate	Name
99R	23168	Button Clamp Opening Lever Hinge Screw for 124740.....
99K	23166	Thread Nipper (lower) Connection Extension Hinge Screw.....
134E	23157	Cylinder Base Plate Screw for 124959....
153E	23159	Table Belt Guide Pulley Shaft Set Screw for 17892.....
160J	23171	Feed Across Lever Hinge Stud Clamping Screw for 62117.....
160J	23171	Feed Regulator Bracket Cap Screw for 62117.....
161E	23159	Treadle Pitman Rod Clamp Screw for 17879
164J	23172	Face Plate Screw.....
164E	23166	Presser Bar Lifting Lever Bracket Screw for 62295.....
168E	23159	Table Belt Guide Set Screw for 39218....
175E	23160	Thread Unwinder Thread Guide Bracket Set Screw for 41635.....
176J	23153	Brake Arm Releasing Lever Screw for 124770.....
178J	23157	Machine Supporting Bracket (lower) Screw for 124966.....
184E	23167	Belt Cover Bracket Screw Stud for 59795.
190J	23167	Arm Side Cover Screw.....
190J	23172	Button Clamp Lifter Screw.....
190J	23169	Cloth Plate Screw.....
190J	23167	Looper Driving Shaft Gear Cover Screw...
190J	23169	Tripping Point Screw for 124688 and 124690.....
191J	23158	Eye and Finger Guard Supporting Bracket Screw for 121627.....
202E	-----	Needle Bar Connecting Stud Set Screw for 9.
202J	23166	Thr136592 .
206J	23166	" Nipper (lower) Connection Extension Screw.....
206J	23173	Throat Plate Needle Guard Screw for 124982.....
208J	23158	Eye and Finger Guard Face Plate Thread Nipper Disc Cover Screw for 136587..
208D	23172	Face Plate Thread Nipper Disc Cover Screw for 59712.....
208J	23173	Loop Finger Carrier Crank Clamping Screw for 124752.....
208J	23173	Loop Finger Carrier Holder Screw.....
208E	23160	Thread Unwinder Thread Guide Rod Screw for 225324.....
217J	23167	Belt Cover Screw.....

From the library of: Superior Sewing Machine & Supply LLC

NUMERICAL LIST OF PARTS

No.	Plate	Name
218J	23173	Loop Finger Carrier Pitman Cap Screw for 124754.....
223F	9596	Thread Breaker Bar Driving Lever Lock Stud Screw for 59734.....
226J	23168	Button Clamp Spring Screw for 124740....
229J	23158	Eye and Finger Guard Face Plate Thread Guard Screw for 136587.....
229D	23172	Face Plate Thread Guard Screw for 59712.
229J	23173	Loop Finger Screw.....
233J	23167	Needle Guard Shaft Spring Screw.....
233J	23167	" " Spreader Screw.....
236D	23167	Cylinder Oil Well Cover Screw.....
236F	23173	Thread Breaker Screw for 124982.....
237K	23166	" Nipper (lower) Lever Set Screw for 124621.....
330J	23172	Thread Wiper Body Finger Screw.....
335J	23169	" Nipper (lower) Cam Screw for 124688 and 124690.....
335J	23169	Thread Nipper (lower) Lever Guide Screw for 124688 and 124690.....
337J	23172	Thread Take-up Roller Cap Screw for 124626.....
377C	23172	Needle Bar Connecting Link Hinge Screw for ~~136568~~ 17653.....
~~391E~~	~~23172~~	~~Needle Bar Connecting Stud Set Screw for 62185.....~~
443C	23159	Treadle Shaft Set Screw for 17876.....
446C	23167	Arm Shaft (upright) Bushing (lower) Set Screw.....
446C	23167	Arm Shaft (upright) Bushing (upper) Set Screw.....
446C	23167	Needle Bar Crank Wheel Set Screw for ~~62256~~ 59757.....
447C	23166	Thread Nipper (upper) Body Set Screw....
453C	23169	Feed Cam Driving Worm Wheel Set Screw for 17797.....
453C	23172	Presser Bar Guide Bracket Set Screw for 17842.....
453C	23157	Cylinder Base Plate Hinge Connection Hinge Pin Set Screw for 124958.....
457C	23172	Thread Controller Stud Set Screw.....
465C	23167	Needle Guard Cam Set Screw for 124980...
465C	23167	" " Shaft Collar Set Screw for 59761.....
624C	23167	Needle Guard Shaft Spring Collar Set Screw for 59766.....
641C	23171	Feed Across Connection (lever end) Ball Stud Set Screw for 62147.....
641C	23172	Thread Wiper Body Support Set Screw.....
665J	23173	Knife Screw for 124982.....

From the library of: Superior Sewing Machine & Supply LLC

No.	Plate	Name
665J	23166	Thread Nipper (lower) Blade Carrier Cap Screw.....
691F	23172	Thread Take-up Screw.....
691F	23173	Throat Plate Screw.....
742F	23169	Cloth Plate Guide Block (left) Screw for 62182.....
792C	23153	Brake Arm Releasing Lever Bracket Screw for 124901.....
853C	23172	Needle Bar Thread Retainer Bracket Set Screw for 124796.....
880E	23167	Arm Screw.....
896E	23171	Feed Across Connection Cap Screw for 63940 and 63942.....
898D	23153	Stop Cam Interlocking Rod Case Socket Joint Cap Screw for 124773.....
934J	23168	Feed Plate Carrier Bar Plate Screw for 62123.....
1004K	23158	Eye and Finger Guard Carrying Arm Hinge Screw (back) for 121613.....
1034D	23169	Cylinder End Cover Spring Screw for 124743.....
1036C	23167	Arm Shaft (horizontal) Gear Set Screw for 59703.....
1057J	23166	Button Clamp Locking Device Latch Clamping Screw for 124711.....
1072F	23172	Needle Set Screw for 62299.....
1094E	23168	Feed Across Lever Plate Screw for 62123.
1143C	23167	Looper Driving Shaft Bushing Set Screw..
1175E	23168	Button Clamp Hinge Screw for 124740.....
1176J	23168	" " Arm Hinge Plate Screw.....
1177D	23168	" " Pressure Spring Bracket Screw
1177D	23171	Feed Regulator Bracket Screw.....
1178D	23168	Button Clamp Pressure Spring Screw.....
1181J	23168	" " Spreader Spring Screw Stud for 124740.....
1182J	23168	Button Clamp Opening Lever Bracket Screw for 124740.....
1182J	23168	Button Clamp Spreader Lever Adjusting Plate Screw for 124740.....
1182J	23168	Button Clamp Spreader Lever Stop Screw for 124740.....
1182J	23168	Button Clamp Spreader Screw for 124740..
1182E	23153	Trip Lever Spring Screw for 124773.....
1183J	23168	Button Clamp Stop Screw for 124740.....
1186D	9596	Thread Breaker Bar Check Plunger Case Screw.....
1188D	23171	Feed Across Regulator Hinge Screw for 124866.....
1190C	23168	Feed Regulator Stop Screw.....

From the library of: Superior Sewing Machine & Supply LLC

No.	Plate	Name
1191D	23168	Feed Regulator Thumb Screw.....
1192C	23169	Feed Cam Set Screw for 124688 and 124690
1195E	23168	" Plate Screw Stud for 62123.....
1196C	23153	Trip Lever Hinge Screw for 124773.....
1201D	23166	Presser Bar Lifting Lever Hinge Screw...
1204E	23153	Stop Cam Interlocking Rod Case Hinge Screw for 124773.....
1206C	23167	Stop Cam Screw for 68720.....
1207D	23172	Thread Wiper Body Hinge Screw.....
1235F	23173	" Breaker Bar Guide Screw.....
1253C	23167	Arm Shaft (upright) Gear (lower) Set Screw for 59707.....
1253C	23167	Arm Shaft (upright) Gear (upper) Set Screw for 59708.....
1253C	9596	Brake Adjusting Plate Handle Shaft Crank Set Screw for 124718.....
1253C	23167	Looper Driving Shaft Gear Set Screw for 59707.....
1253C	23167	Needle Guard Shaft Crank Set Screw for 124602.....
1254C	23153	Stop Cam Interlocking Rod Case Stop Stud Screw Bushing for 124773.....
1255D	23153	Belt Shifter Clamp Screw for 124904.....
1262C	23153	Starting Lever Hinge Screw for 124773...
1282C	23166	Button Clamp Locking Device Latch Shaft Crank Connection Hinge Screw (lower)
1282C	23166	Button Clamp Locking Device Latch Shaft Crank Connection Hinge Screw (upper)
1293C	23167	Needle Bar Crank Wheel Position Screw for ~~62235~~ 5.9.7.37.....
1302D	23172	Thread Wiper Body Wire Clamp Screw.....
1318D	23153	Stop Cam Interlocking Rod Stop Screw for 124771.....
1382F	9596	Thread Breaker Bar Driving Lever Hinge Screw.....
1396J	23157	Machine Supporting Bracket (upper) Screw for 124966.....
1403D	9596	Brake Arm Hinge Screw.....
1441C	23167	Feed Cam Driving Worm Set Screw for 18415.....
1442C	23167	Feed Cam Driving Worm Position Screw for 18415.....
1449H	23172	Needle Bar Thread Retainer Screw for 124795.....
1477D	23169	Cylinder End Cover Bracket Screw for 124743.....
1477D	23169	Cylinder End Cover Hinge Screw for 124743.....
1477F	23172	Thread Controller Spring Collar Set Screw for 124608.....

From the library of: Superior Sewing Machine & Supply LLC

No.	Plate	Name
1484J	23172	Button Clamp Opening Lever Contact Piece Screw.....
1508J	23153	Stop Cam Interlocking Rod Case Stop Stud Screw Bushing Lock Nut for 124773.....
1518J	23172	Needle Bar Connecting Link Hinge Screw Nut for ~~136588~~ 136293.....
1520J	23167	Arm Shaft (horizontal) Bushing (back) Adjusting Screw Nut.....
1527D	23166	Thread Nipper (upper) Lock Nut for 59778
1547J	23169	Cloth Plate Guide Block (left) Screw Nut for 62182.....
1547J	23173	Thread Breaker Holder Cap Screw Nut for 124982.....
1560C	23166	Tension Regulating Thumb Nut for 124687.
1649C	23171	Feed Across Connection Adjusting Stud Nut (left).....
1650C	23171	Feed Across Connection Adjusting Stud Nut (right).....
1653C	23169	Feed Cam Shaft Nut for 62264.....
1654C	23168	" Plate Nut.....
1655E	23171	" Across Regulator Link Screw Stud Nut for 124866.....
1655C	23171	Feed Regulator Roller and Screw Stud Nut for 1953.....
1662C	23153	Starting Lever Hinge Screw Nut for 124773.....
1676C	23171	Feed Across Regulator Adjusting Screw Stud Nut.....
1681C	9596	Thread Breaker Bar Driving Lever Hinge Screw Nut.....
1695C	9596	Stop Cam Interlocking Rod Case Spring Hook Lock Nut.....
1698J	23158	Eye and Finger Guard Carrying Arm Hinge Screw (back) Nut for 121613.....
1722D	9596	Thread Breaker Bar Check Plunger Lock Nut for 124936.....
1722D	9596	Thread Breaker Bar Check Plunger Nut for 124936.....
1735J	23158	Eye and Finger Guard Carrying Arm Hinge Screw (front) Nut for 121613.....
1743D	23166	Thread Nipper (upper) Adjusting Thumb Nut for 59778.....
1952	23171	Feed Across Lever Roller and Stud for 62147.....
1953	23171	Feed Regulator Roller and Screw Stud with 1655C and 14017, for 17742.....
2026	23166	Thread Nipper (upper) Stud Spring for 59778.....
2058	23172	Presser Bar.....

From the library of: Superior Sewing Machine & Supply LLC

No.	Plate	Name
2102	23166	Tension Disc.....
2107	23158	Eye and Finger Guard Face Plate Thread Guard for 136587.....
2107	23172	Face Plate Thread Guard for 59712.....
2273	23167	Needle Guard Pin for 124983.....
2921	23166	Thread Nipper (upper) Disc for 59778....
3012	23167	Stop Cam Pin.....
3021	23169	Cloth Plate Guide Block (right) Rivet for 62182.....
3021	23167	Thread Breaker Holder Connection Rivet for 62124.....
4448	23167	Arm Oil Tube for intermediate bearing...
*4449	-----	Arm Shaft (horizontal) Bushing (front) for 62295.....
4822	23157	Wrench for 1547 (Attachments and Accessories).....
6037	23166	Thread Nipper (lower) Blade Rivet for 124614.....
7071	23166	Thread Pull-off Screw Washer.....
8505	23168	Feed Plate Screw Stud Rivet for 62123...
8554	23166	Thread Nipper (lower) Driving Arm Pin...
8554	23166	" " " Lever Pin.....
8589	23171	Feed Regulator Bracket Dowel Pin.....
9311	23168	Button Clamp Spring Steady Pin for 39238 and 39239.....
9543	23158	Eye and Finger Guard Face Plate Thread Nipper Disc for 136587.....
9543	23172	Face Plate Thread Nipper Disc for 59712.
9544	23158	Eye and Finger Guard Face Plate Thread Nipper Disc Cover for 136587.....
9544	23172	Face Plate Thread Nipper Disc Cover for 59712.....
9545	23158	Eye and Finger Guard Face Plate Thread Nipper Disc Spring for 136587.....
9545	23172	Face Plate Thread Nipper Disc Spring for 59712.....
10875	23157	Wrench for 1518,1520,1649,1650 and 1662 (Attachments and Accessories).....
11622	9596	Stop Cam Interlocking Rod Case Spring...
11831	23157	Screw Driver (large) Attachments and Accessories.....
12162	23166	Thread Nipper (upper) Disc Guide Pin....
13351	23159	Chain, 46 in. to 55 in. long, with 56864 and 56865.....
13538	23166	Thread Nipper (upper) Stud Position Pin for 59776.....
13539	23166	Thread Nipper (upper) Stud Roller for 59777.....
13540	23166	Thread Nipper (upper) Stud Roller Pin for 59777.....
13915	23166	Tension Spring Bushing.....

From the library of: Superior Sewing Machine & Supply LLC

No.	Plate	Name
14017	23171	Feed Across Regulator Link Screw Stud Nut Washer for 124866.....
14017	23171	Feed Regulator Roller and Screw Stud Nut Washer for 1953.....
*15404	-----	Trade Mark for 62295.....
15405	-----	" " Rivet for 62295.....
16532	23167	Arm Dowel Pin.....
17703	23167	" Shaft (horizontal) Bushing (back)...
17710	23168	Button Clamp Arm Hinge Plate.....
17713	23168	" " Pressure Spring Bracket....
17714	23168	" " " " Guide Block for 124732.....
17718	23172	Button Clamp Opening Lever Contact Piece Screw Washer.....
17718	23168	Button Clamp Spreader Lever Adjusting Plate Screw Washer for 124740.....
17718	23168	Button Clamp Spreader Lever Stop Screw Washer for 124740.....
17719	23168	Button Clamp Spreader Spring for 124740.
17720	23168	" " " Steady Pin for 39248
17723	23168	" " Stud for 39238 and 39239...
17737	23171	Feed Across Lever Hinge Stud for 124676.
17738	23171	" " Regulator Adjusting Screw Stud Nut Washer (steel).....
17738	23166	Thread Nipper (lower) Lever Shaft Bracket Screw Washer.....
17741	23168	Feed Across Regulator Link Stud for 62118.....
17742	23171	Feed Regulator with 1953.....
17743	23168	" " Post for 62123.....
17744	23168	" " Hinge Stud.....
17745	23168	" " Swivel.....
17797	23169	" Cam Driving Worm Wheel with 453C,for 62264.....
17806	23168	Feed Plate Position Stud for 62123.....
17842	23172	Presser Bar Guide Bracket with 453C.....
17845	23166	" " Lifting Lever Rod.....
17846	23166	" " " " " Chain.....
17853	23153	Starting Lever for 124773.....
17854	23167	Stop Cam for 68720.....
17855	23153	" " Interlocking Rod for 124771....
17859	23153	" " " " Case Socket Joint for 124773.....
17861	23153	Stop Cam Interlocking Rod Case Stop Stud for 124773.....
17862	23153	Stop Cam Interlocking Rod Case Stop Stud Spring for 124773.....
17863	23153	Stop Cam Interlocking Rod Spring for 124771.....
17864	23153	Stop Cam Interlocking Rod Stop for 124771.....

From the library of: Superior Sewing Machine & Supply LLC

No.	Plate	Name
17872	23153	Trip Lever for 124773.....
17873	23153	" " Spring for 124773.....
17874	23169	Tripping Point for 124688 and 124690....
17876	23159	Treadle with 443C, for 17884.....
17877	23159	" Pitman Rod (lower) for 17880....
17878	23159	" " " (upper) for 17880....
17879	23159	" " " Clamp with two 161E, for 17880.....
17880	-----	Treadle Pitman complete for 17885, Nos. 17877 to 17879.....
17881	23159	Treadle Shaft for 17884.....
17882	23159	" Spring for 17884.....
17883	23159	" Stand for 17884.....
17884	23159	Treadle complete, for 17885, Nos. 17876, 17881 to 17883 and two wood screws 1 in. No. 10.....
17885	-----	Treadle and Pitman complete, Nos. 17880 and 17884.....
17892	23159	Table Belt Guide Bracket with two 153E, for 39221.....
17893	23159	Table Belt Guide Pulley for 39221.....
17896	23159	" " " " Shaft Plug for 39219 and 39220.....
17905	23157	Wrench for 1176,1178,1654,1655 and 1676 (Attachments and Accessories).....
17915	9596	Thread Breaker Bar Connection Slide Block for 17917.....
17916	9596	Thread Breaker Bar Connection Slide Block Stud for 17917.....
17917	-----	Thread Breaker Bar Connection Slide Block 17915 with 17916, for 62126...
18368	23168	Feed Plate Carrier Bar Plate for 62123..
18384	23169	" Cam Driving Worm Wheel Pin.....
18384	23169	" " Pin.....
18415	23167	" " Driving Worm with 1441C and 1442C.....
18420	23157	Cylinder Base Plate Hinge Connection for 124959.....
18423	23157	Cylinder Base Plate Hinge Connection Hinge Pin for 124959.....
*18445	-----	Feed Plate Carrier Bar for 62123.....
18498	23167	Belt Cover.....
19694	9596	Stop Cam Interlocking Rod Case Spring Hook.....
20437	23168	Button Clamp Pressure Spring Screw Washer.....
21828	23153	Stop Cam Interlocking Rod Case Bracket Dowel Pin.....
25200	23157	Wrench for 1527 (Attachments and Accessories).....

From the library of: Superior Sewing Machine & Supply LLC

No.	Plate	Name
26026	23157	Screw Driver (small) Attachments and Accessories.....
26770	23169	Cloth Plate Stop Rivet for 62182.....
27662	23157	Wrench for 1254 and 1508 (Attachments and Accessories).....
27739	23160	Thread Unwinder Thread Cone (wood) for large cones for 225260.....
32675	23172	Presser Bar Spring.....
34418	23167	Looper Washer for 62298.....
*39203	-----	Needle Bar Connecting Link for ~~136588~~ 136593
39218	23159	Table Belt Guide with two 168E, for 39221
39219	23159	" " " Pulley Shaft (long) with 17896 and 63973, for 39221.....
39220	23159	Table Belt Guide Pulley Shaft (short) with 17896 and 63974, for 39221.....
39221	23159	Table Belt Guide complete, Nos. 17892, 39219, 39220, two each 17893, 39218 and three wood screws 1 1/4 in.No.12
39222	23153	Belt Shifter for 124771.....
39238	23168	Button Clamp (left) with 9311 and 17723, for 124740.....
39239	23168	Button Clamp (right) with 9311 and 17723, for 124740.....
39241	23168	Button Clamp Pressure Spring.....
39242	23168	" " Spreader for 124740.....
39244	23168	" " Spring (left) for 124740...
39245	23168	" " " (right) for 124740..
39248	23168	" " Stop with two 17720, for 124740.....
39452	23172	Thread Wiper Body.....
39455	23172	" " " Wire.....
39456	23172	" " " " Clamp.....
41635	23160	" Unwinder Thread Guide Bracket with 175E, for 60772.....
42336	23166	Tension Spring.....
42639	23172	Needle Bar Thread Retainer Position Pin for 124796.....
42808	23172	Thread Take-up Roller for 124626.....
46244	23171	Feed Across Regulator Adjusting Screw Stud Nut Washer (fibre).....
50018F	23173	Thread Breaker Holder Cap Screw for 124982.....
50117J	23172	Button Clamp Opening Lever Contact Piece Arm Screw.....
50148C	23166	Tension Screw Stud for 124687.....
50150C	23167	Loop Finger Driver Cam Set Screw for 124978.....
50150C	23167	Looper Shaft Coupling Set Screw for 124765.....
50150C	23167	Thread Nipper (upper) Cam Set Screw for 59774.....

From the library of: Superior Sewing Machine & Supply LLC

No.	Plate	Name
50152D	9596	Thread Breaker Bar Check Screw.....
50165J	23158	Eye and Finger Guard Frame Screw for 121613.....
50183D	23173	Loop Finger Driver Hinge Screw.....
50189C	23167	Looper Shaft Bushing Set Screw.....
50222K	23158	Eye and Finger Guard Carrying Arm Hinge Screw (front) for 121613.....
50237F	23168	Button Clamp Spreader Lever Stop Position Screw for 124740.....
50274C	23167	Looper Set Screw for 136546.....
50306D	23168	Feed Plate Carrier Bar Pivot Block Screw
50324C	23171	" Across Regulator Link Screw Stud for 124866.....
50333C	23167	Arm Shaft (horizontal) Bushing (back) Adjusting Screw.....
50370J	23166	Tension Thread Guide Set Screw.....
50372D	23153	Stop Cam Interlocking Rod Case Bracket Screw.....
50435J	9596	Brake Adjusting Plate Handle Hinge Screw
50435K	23158	Eye and Finger Guard Depressing Screw for 121627.....
50435K	23158	Eye and Finger Guard Guiding Rod Hinge Screw for 121613.....
50446D	9596	Brake Hinge Screw.....
50599D	23171	Feed Across Regulator Adjusting Screw Stud.....
51120J	9596	Thread Breaker Bar Check Regulating Screw for 124936.....
51188J	23166	Thread Nipper (lower) Lever Shaft Bracket Screw.....
51224W	9596	Brake Adjusting Plate Thumb Screw.....
51387R	23167	Pulley (loose) Cap Screw for 68717.....
51591J	9596	Thread Breaker Bar Check Regulating Screw Lock Nut for 124936.....
51857	23167	Needle Guard Shaft Crank Roller for 124974.....
51868	23173	Loop Finger Driver Roller and Stud for 124757.....
52045	23167	Looper Driving Shaft Bushing Packing (cotton).....
55300	23168	Feed Across Lever Plate Steady Pin for 62123.....
55381	23171	Feed Across Connection (lever end) Ball Stud for 63941.....
56015	23167	Arm Oil Tube for oiling 59705 and 59706.
56493	9596	Brake Pad (leather) for 124713.....
56864	23159	Chain Hook (large) for 13351.....
56865	23159	" " (small) for 13351.....
59702	23167	Arm Shaft (horizontal) for ~~136541~~ 136540
59703	23167	" " " Gear with two 1036C

From the library of: Superior Sewing Machine & Supply LLC

No.	Plate	Name
59704	23167	Arm Shaft (upright).....
59705	23167	" " " Bushing (lower).....
59706	23167	" " " " (upper).....
59707	23167	" " " Gear (lower) with two 1253C.....
59707	23167	Looper Driving Shaft Gear with two 1253C
59708	23167	Arm Shaft (upright) Gear (upper) with two 1253C.....
59711	23172	Face Plate for 59712.....
59712	23172	Face Plate complete, Nos.208D,9544,9545, 59711 and two each 229D, 2107 and 9543.....
59730	23168	Feed Plate Carrier Bar Pivot Block.....
59734	9596	Thread Breaker Bar Driving Lever with 223F and 59735.....
59735	9596	Thread Breaker Bar Driving Lever Lock Stud for 59734.....
59739	23173	Thread Breaker Holder Cap Stud for 62129
59739	23173	" " " Stud for 124908...
59757	-----	Needle Bar Crank Wheel with 446C and .....
59761	23167	Nee 1293C, for 136540 465C.
59765	23167	" " " Spring.....
59766	23167	" " " " Collar with 624C
59773	23166	Thread Nipper (upper) Body for 59778....
59774	23167	" " " Cam with two 50150C, for ~~136541~~ 136540.....
59775	23166	Thread Nipper (upper) Eyelet for 59778..
59776	23166	" " " Stud with 13538, for 59777.....
59777	-----	Thread Nipper (upper) Stud complete for 59778, Nos. 13539, 13540 and 59776..
59778	23166	Thread Nipper (upper) complete, Nos. 1527D,1743D,2026,59773,59775,59777, 62169 and two 2921.....
59795	23167	Belt Cover Bracket with 184E and 59796..
59796	23167	Belt Cover Bracket Stud for 59795.....
59797	23174	Button Tray with two wood screws 1 1/4 in. No. 14 (Attachments and Accessories).....
60771	23160	Thread Unwinder Thread Guide for 60772..
60772	-----	" " " " 60771 with 41635, for 60773.....
60773	23160	Thread Unwinder with Thread Guide complete, for one large spool or one large cone of thread, Nos. 60772 and 225260.....
62102	23169	Cloth Plate Guide Block (left) for 62182
62103	23169	" " " " (right) for 62182
62104	23169	" " Stop for 62182.....
62111	23169	Cylinder End Cover Bracket Hinge Pin for 124743.....

From the library of: Superior Sewing Machine & Supply LLC

No.	Plate	Name
62113	23169	Cylinder End Cover Spring for 124743....
62115	23171	Feed Across Connection Adjusting Stud...
62117	23171	" Regulator Bracket with three 160J..
62118	23168	" Across Lever Plate with 17741, for 62123.....
62119	23168	Feed Across Lever Plate Cover for 62123.
62121	23171	" " Regulator Link.....
62123	23168	" Plate Carrier Bar 18445 with 934J, 1094F,1195E,8505,17743,18368,62118, 62119, two 55300 and four 17806.....
62124	23167	Thread Breaker Bar with 62130 and two 3021.....
62126	9596	Thread Breaker Bar Connection with 17917
62129	23173	" " Holder Cap with 59739 for 124982.....
62130	23167	Thread Breaker Holder Connection for 62124.....
62147	23171	Feed Across Lever with 641C and 1952,for 124676.....
62155	23169	Feed Cam Shaft for 62264.....
62169	23166	Thread Nipper (upper) Disc Spring for 59778.....
62171	23172	Thread Take-up Roller Cap for 124626....
62172	23172	" " " Pin for 124625....
*62180	-----	Cloth Plate with 62181, for 62182.....
*62181	-----	" " Button Tray for 62180.....
62182	23169	Cloth Plate complete, Nos. 742F, 1547J, 26770, 62102 to 62104, 62180 and two 3021.....
62185	23169	Cylinder End Cover Bracket for 124743...
62189	23169	" Bottom Cover for 124743.....
62235	23167	Needle Bar Crank Wheel with 446C and 1293C, for 136541.....
62264	-----	Feed Cam Shaft 62155 with 1653C and 17797.....
~~*62295~~	-----	~~Arm 124845 with 4449, 15404, 124793 and two each 164E and 15405.....~~
62297	23168	Feed Plate for four hole buttons.....
62298	23167	Looper with 34418.....
62299	23172	Needle Bar with 1072F.....
63940	23171	Feed Across Connection (lever end) with two 896E, for 63941.....
63941	-----	Feed Across Connection (lever end) 63940 with 55381.....
63942	23171	Feed Across Connection (regulator end) with two 896E, for 63943.....
63943	-----	Feed Across Connection (regulator end) 63942 with 63944.....
63944	23171	Feed Across Connection (regulator end) Ball Stud for 63943.....

From the library of: Superior Sewing Machine & Supply LLC

No.	Plate	Name
63973	23159	Table Belt Guide Pulley Shaft (long) Wick (braided cotton) for 39219.....
63974	23159	Table Belt Guide Pulley Shaft (short) Wick (braided cotton) for 39220.....
63976	23153	Belt Shifter Clamp for 124904.....
~~65135~~	~~23172~~	~~Needle Bar Connecting Stud with 391E, for 136568...~~.....
68712	23167	Pulley (loose) 2 3/4 in. diam. with 200584D, for 68713.....
68713	-----	Pulley (loose) 68712 with 68714, for 68717.....
68714	23167	Pulley (loose) Ball Bearing for 68713...
68715	23167	" " Bushing for 68717.....
68716	23167	" (tight) 2 7/8 in. diam. for 68720
68717	-----	Pulleys (ball bearing) complete for ~~1365~~ ~~136541~~, Nos.51387R, 68713, 68715 and 68720.....
68720	-----	Pulley (tight) 68716 with 1206C and 17854, for 68717.....
68739	23153	Stop Cam Interlocking Rod Stop Screw Washer for 124771.....
120346	23157	Oiler (copper plated) with 120347 (Attachments and Accessories).....
120347	23157	Oiler Spout, 8 1/2 in. long for 120346..
121603	23158	Eye and Finger Guard (glass) for 121608.
121604	23158	" " " " Carrying Arm for 121613.....
121605	23158	Eye and Finger Guard Carrying Arm Spring for 121613.....
121606	23158	Eye and Finger Guard Depressing Screw Holder for 121627.....
121607	23158	Eye and Finger Guard Frame for 121608...
121608	-----	" " " " 121607 with 121603, for 121613.....
121609	23158	Eye and Finger Guard Guiding Rod for 121613.....
121611	23158	Eye and Finger Guard Holder for 121613..
121612	23158	" " " " Supporting Bracket for 121613.....
121613	-----	Eye and Finger Guard complete for 121627, Nos.1004K,1698J,1735J,50222K,50435K, 121604,121605,121608,121609,121611, 121612 and two 50165J.....
121627	23158	Eye and Finger Guard with Face Plate complete, Nos. 50435K,121606,121613, 136587, 140061J and two 191J.....
124602	23167	Needle Guard Shaft Crank with 124974 and two 1253C.....
124607	23172	Thread Controller Spring for 124611.....
124608	23172	" " " Collar with 1477F, for 124611.....

From the library of: Superior Sewing Machine & Supply LLC

No.	Plate	Name
124609	23172	Thread Controller Sleeve for 124611.....
124610	23172	" " Stud for 124611.....
124611	-----	Thread Controller complete, Nos. 124607 to 124610.....
*124612	-----	Thread Nipper (lower) Blade for 124614..
*124613	-----	" " " " Carrier with 124619, for 124614.....
124614	23166	Thread Nipper (lower) Blade Carrier 124613 with 124612 and two 6037.....
124615	23173	Thread Nipper (lower) Blade Carrier Hinge Stud for 124909.....
124616	23169	Thread Nipper (lower) Cam for 124688 and 124690.....
124618	23166	Thread Nipper (lower) Connection Extension.....
124619	23166	Thread Nipper (lower) Connection Hinge Stud for 124613.....
124620	23166	Thread Nipper (lower) Driving Arm.....
124621	23166	" " " Lever with 237K...
124622	23169	" " " " Guide for 124690, for 114-28 Machine.....
124623	23166	Thread Nipper (lower) Lever Shaft.....
124625	23172	" Take-up Body with 62172, for 124626
124626	-----	Thread Take-up complete, Nos.337J,42808, 62171 and 124625.....
124630	23170	Thread Nipper (lower) Lever Guide for 124688, for 114-29 Machine.....
124653	23166	Thread Nipper (lower) Connection.....
124674	23167	Arm Side Cover.....
124676	-----	Feed Across Lever 62147 with 17737.....
124678	23166	Button Clamp Locking Device Latch Shaft.
124679	23166	" " " " " " Crank.....
124680	23166	Button Clamp Locking Device Latch Shaft Crank Connection.....
124687	-----	Tension Screw Stud 50148C with 1560C....
124688	23170	Feed Cam with two each 190J,1192C,17874, 124616, 124630 and ten 335J, for 114-29 Machine.....
124690	23169	Feed Cam with two 1192C,three each 190J, 17874,124616,124622 and twelve 335J, for 114-28 Machine.....
124698	23167	Needle Guard Shaft Crank Roller Bushing for 124974.....
124699	23167	Needle Guard Shaft Crank Roller Bushing Stud for 124974.....
124711	23166	Button Clamp Locking Device Latch with two 1057J.....
124712	9596	Brake for 124713.....
124713	-----	" 124712 with four 56493.....

From the library of: Superior Sewing Machine & Supply LLC

No.	Plate	Name
124714	9596	Brake Adjusting Plate.....
124715	9596	" " " Handle for 124716.
124716	-----	" " " " 124715 with 124717.....
124717	9596	Brake Adjusting Plate Handle Shaft for 124716.....
124718	9596	Brake Adjusting Plate Handle Shaft Crank with 1253C.....
124719	9596	Brake Adjusting Plate Thumb Screw Bushing for 124741.....
124720	9596	Brake Arm.....
124732	23168	Button Clamp Arm with 17714 and 124780, for 124740.....
124733	23168	Button Clamp Opening Lever for 124740...
124734	23168	" " " " Bracket for 124740.....
124735	23172	Button Clamp Opening Lever Contact Piece
124736	23172	" " " " " " Arm.....
124737	23168	Button Clamp Spreader Lever for 124740..
124738	23168	" " " " Adjusting Plate for 124740.....
124739	23168	Button Clamp Spreader Lever Stop for 124740.....
124740	-----	Button Clamp complete, Nos. 99R, 1181J, 1183J,17719,39238,39239,39242,39244, 39245,39248,50237F,124732 to 124734, 124737 to 124739, two each 226J, 1175E, 17718 and five 1182J.....
*124741	-----	Cylinder with 124719.....
124742	23169	" End Cover for 124743.....
124743	23169	" " " 124742 with 1034D, 62111,62113,62185,62189,124744 and four 1477D.....
124744	23169	Cylinder End Cover Hinge for 124743.....
124745	23167	" Oil Well Cover.....
124747	-----	Feed Plate for two hole buttons.....
124752	23173	Loop Finger Carrier Crank with 208J and 124755, for 124791.....
124753	23173	Loop Finger Carrier Holder for 124797...
124754	23173	" " " Pitman with four 218J, for 124791.....
124755	23173	Loop Finger Carrier Pitman Ball Stud for 124752 and 124757.....
124757	23173	Loop Finger Driver with 51868 and 124755, for 124791.....
124759	23167	Loop Finger Rocking Frame.....
124761	23167	Looper Driving Shaft.....
124762	23167	" " " Bushing.....
124763	23167	" Shaft.....

From the library of: Superior Sewing Machine & Supply LLC

No.	Plate	Name
124764	23167	Looper Shaft Bushing.....
124765	23167	" " Coupling with four 50150C..
124767	23167	Needle Guard Shaft for 124983.....
124768	23167	" " Spreader.....
124769	23166	Presser Bar Collar and Thread Pull-off Bracket with two 196C.....
124770	-----	Stop Cam Interlocking Rod Case 124784 with 124774,124901 and two 176J, for 124904.....
124771	-----	Stop Cam Interlocking Rod Case 124904 with 1318D,17855,17863,17864,39222 and 68739, for 124773.....
124772	23153	Stop Cam Interlocking Rod Case Bracket for 124773.....
124773	-----	Stop Cam Interlocking Rod Case Bracket complete, Nos. 1182E, 1196C, 1204E, 1254C,1262C,1508J,1662C,17853,17859, 17861, 17862, 17872, 17873, 124771, 124772 and two 898D.....
124774	23153	Stop Cam Interlocking Rod Case Wearing Block for 124770.....
124775	23166	Tension Thread Guide.....
124776	23166	Thread Pull-off.....
124777	23172	" Wiper Body Support.....
124780	23168	Button Clamp Arm Hook for 124732.....
124784	23153	Stop Cam Interlocking Rod Case for 124770.....
124787	23173	Thread Breaker Bar Guide.....
124790	23166	Presser Bar Lifting Lever.....
124791	-----	Loop Finger Carrier Pitman 124754 with 124752 and 124757.....
124793	23166	Presser Bar Lifting Lever Bracket for 62295.....
124794	23172	Needle Bar Thread Retainer for 124795...
124795	-----	Needle Bar Thread Retainer complete,Nos. 1449H, 124794, 124796 and 124821....
124796	23172	Needle Bar Thread Retainer Bracket with 853C and two 42639, for 124795.....
124797	-----	Loop Finger Carrier 124824 with 124753..
124806	23172	Thread Wiper Body Finger.....
124821	23172	Needle Bar Thread Retainer Spring for 124795.....
124823	23166	Button Clamp Locking Device Latch Shaft Crank Pin.....
124824	23173	Loop Finger Carrier for 124797.....
*124845	-----	Arm for 62295.....
124846	9596	Brake Spring.....
124850	23173	Thread Breaker for 124982.....
124865	23171	Feed Across Regulator for 124866.....
124866	-----	" " " 124865 with 1188D, 1655E, 14017 and 50324C.....

From the library of: Superior Sewing Machine & Supply LLC

No.	Plate	Name
124901	-----	Brake Arm Releasing Lever 124902 with 124903 and two 792C, for 124770.....
124902	23153	Brake Arm Releasing Lever for 124901....
124903	23153	" " " " Bracket for 124901.....
124904	-----	Stop Cam Interlocking Rod Case 124770 with 63976 and two 1255D, for 124771
124906	23172	Button Clamp Lifter.....
124907	23173	Knife for 124982.....
124908	23173	Thread Breaker Holder with 59739, for 124982.....
124909	23173	Throat Plate with 124615, for 124982....
124933	9596	Thread Breaker Bar Check for 124936.....
124934	9596	" " " " Plunger for 124936.....
124935	9596	Thread Breaker Bar Check Plunger Case for 124936.....
124936	-----	Thread Breaker Bar Check complete, Nos. 51120J, 51591J, 124933 to 124935, 124938 and two 1722D.....
124938	9596	Thread Breaker Bar Check Plunger Spring for 124936.....
124957	23166	Thread Nipper (lower) Lever Shaft Bracket.....
124958	23157	Cylinder Base Plate with two 453C, for 124959.....
124959	23157	Cylinder Base Plate (hinged) complete for 124975, Nos. 124958, two each 18420,18423, three wood screws 1 1/4 in. No. 12 and four 134E.....
124960	23157	Machine Supporting Bracket (lower) for 124966.....
124961	23157	Machine Supporting Bracket (upper) for 124966.....
124962	23157	Machine Supporting Link (lower) for 124966.....
124963	23157	Machine Supporting Link (upper) for 124966.....
124964	23157	Machine Supporting Link Hinge Rivet for 124966.....
124964	23157	Machine Supporting Link Lock Plate Rivet for 124966.....
124965	23157	Machine Supporting Link Lock Plate for 124966.....
124966	23157	Machine Support complete for 124975,Nos. 178J,1396J,124960 to 124963,124965, 190333 and four 124964.....
124974	-----	Needle Guard Shaft Crank Roller complete for 124602, Nos. 51857, 124698 and 124699.....

From the library of: Superior Sewing Machine & Supply LLC

No.	Plate	Name
124975	-----	Cylinder Base Plate 124959 with 124966 (Attachments and Accessories).....
124978	23167	Loop Finger Driver Cam with two 50150C..
124979	23167	Needle Guard for 124983.....
124980	23167	" " Cam with two 465C.....
124981	23173	Throat Plate Needle Guard for 124982....
124982	23173	Throat Plate complete, Nos. 665J,1547J, 50018F,62129,124850,124907 to 124909, 124981 and two each 206J and 236F...
124983	-----	Needle Guard Shaft 124767 with 2273 and 124979.....
*136540	-----	Arm Shaft (horizontal) 59702 with 59757, , 59774 and 68717
136545	23173	Loop Finger.....
136546	23167	" " Cam with 50274C.....
136586	23158	Eye and Finger Guard Face Plate for 136587.....
136587	-----	Eye and Finger Guard Face Plate complete for 121627,Nos.208J,9544,9545,136586 and two each 229J.2107 and 9543
136588	23172	Needle Bar Connecting Link 39203 with 377C, 1518J and 65135
		Delete No. and description and insert the following:
136592	-----	Needle Bar Connecting Stud with 202E,for 136593
136593	-----	Needle Bar Connecting Link 39203 with 377C, 1518J and 136592
136594	-----	Arm Oil Tube, for oiling Needle Bar Connecting Link (upper) Bearing
200584D	23167	Pulley (loose) Oil Hole Plug Screw for 68712.....
201018C	23160	Thread Unwinder Spool Rest Set Screw for 225259.....
201696J	23160	Thread Unwinder Thread Guide Lock Nut for 225260.....
202490	23160	Thread Unwinder Spool Stand with 200383C, for 225260.....
225259	23160	Thread Unwinder Spool Rest with 201018C, for 225260.....
225260	-----	Thread Unwinder complete for 60773, Nos. 150203,201696J,202490,225259,225324, 225326,225388,225391 and three wood screws 7/8 in. No. 12.....
225322	23160	Thread Unwinder Thread Guide Rod Washer for 225324.....
225324	23160	Thread Unwinder Thread Guide Rod with 208E and 225322, for 225260.....
225326	23160	Thread Unwinder Thread Guide Position Cup for 225260.....

From the library of: Superior Sewing Machine & Supply LLC

No.	Plate	Name
225388	23160	Thread Unwinder Spool Rest Rod for 225260.....
225390	23160	Thread Unwinder Thread Cone Holder for inverted cones for 225260.....
225391	23160	Thread Unwinder Thread Guide for 225260.

Genuine Singer Needles should be used in Singer Machines.
These Needles and their Containers are marked with the Company's Trade Mark "SIMANCO." 1

Needles in Containers marked "For Singer Machines" are not Singer made needles. 2

From the library of: Superior Sewing Machine & Supply LLC

Genuine Singer Needles should be used in Singer Machines.
These Needles and their Containers are marked with the Company's Trade Mark "SIMANCO." 1

Needles in Containers marked "For Singer Machines" are not Singer made needles. 2

From the library of: Superior Sewing Machine & Supply LLC

ILLUSTRATIONS OF PARTS

From the library of: Superior Sewing Machine & Supply LLC

9596 - 2/3

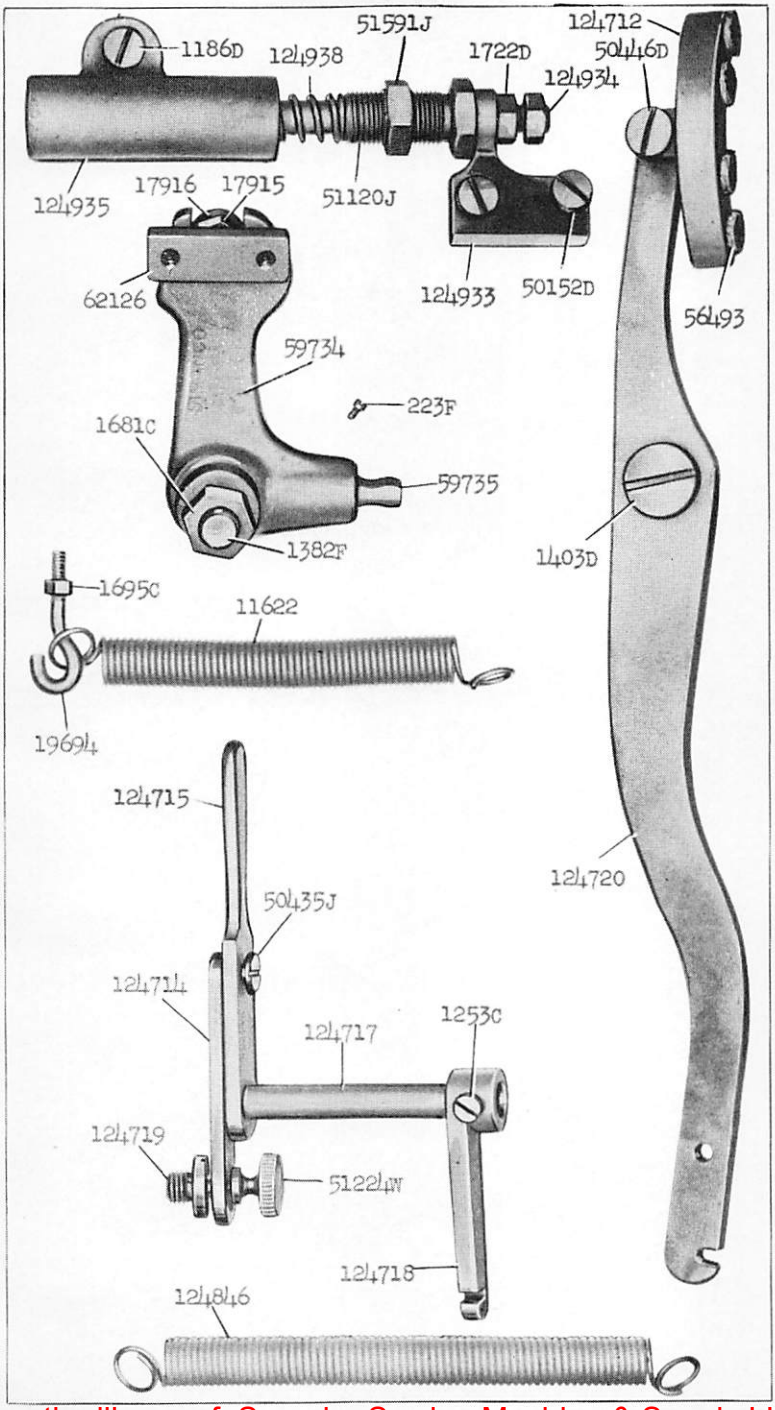

From the library of: Superior Sewing Machine & Supply LLC

23153 - 2/3

From the library of: Superior Sewing Machine & Supply LLC

23157 - 1/3

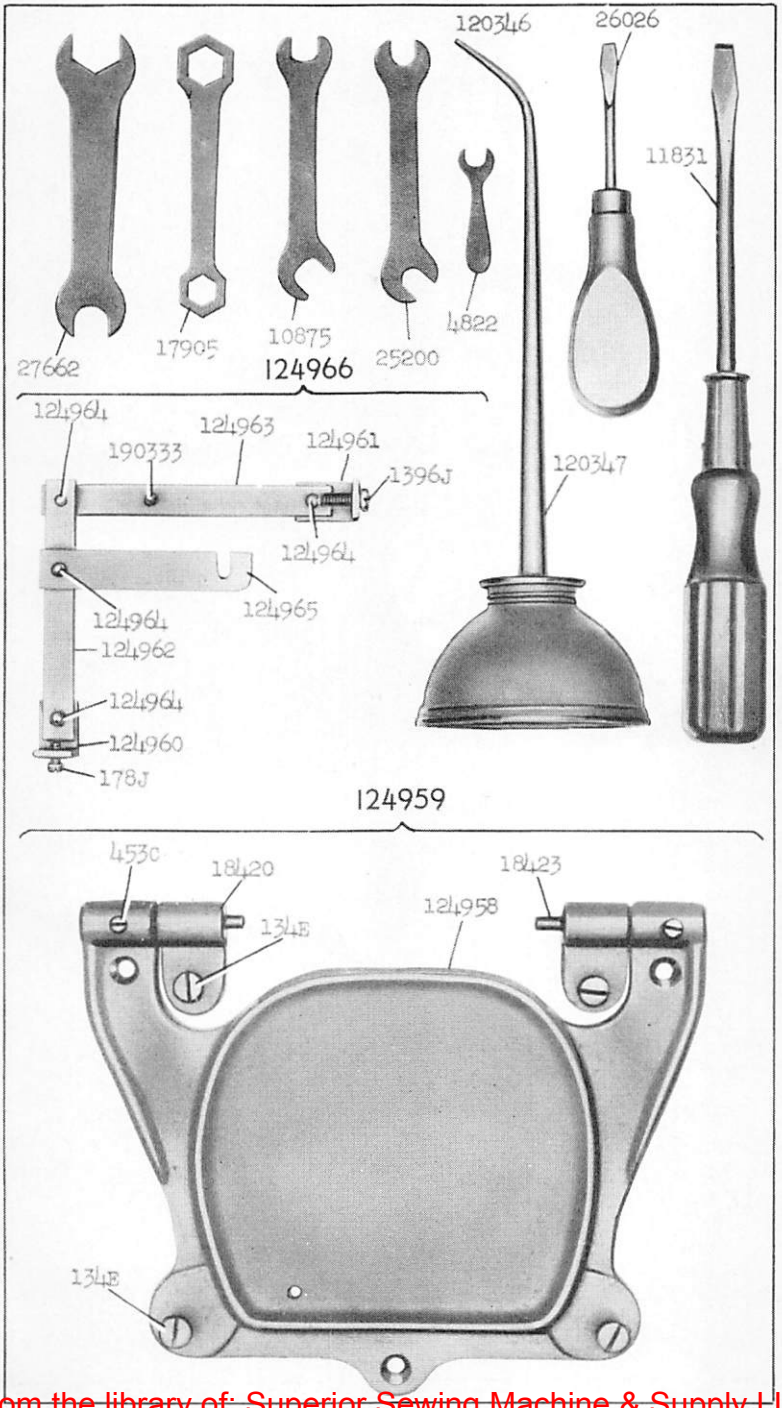

From the library of: Superior Sewing Machine & Supply LLC

23158 - 2/3

121627

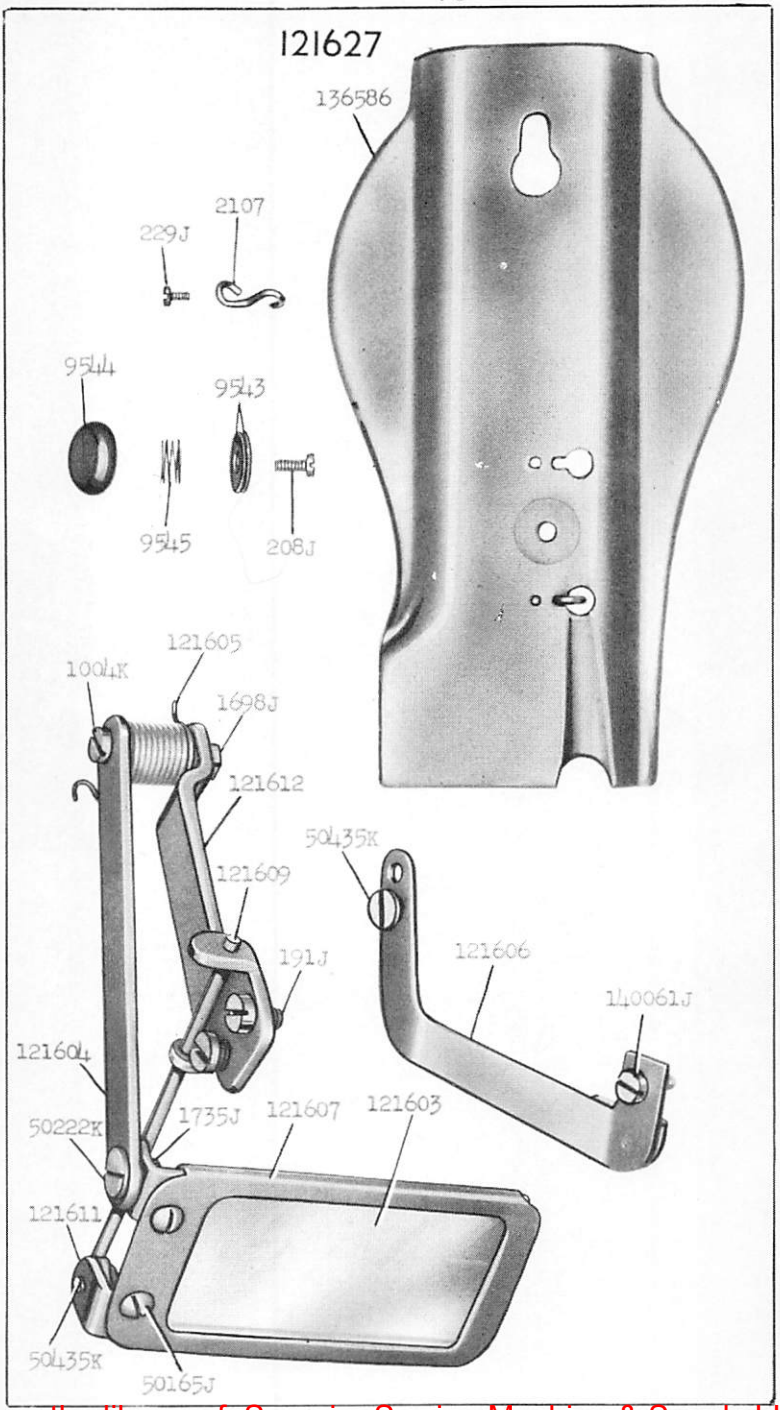

From the library of: Superior Sewing Machine & Supply LLC

From the library of: Superior Sewing Machine & Supply LLC

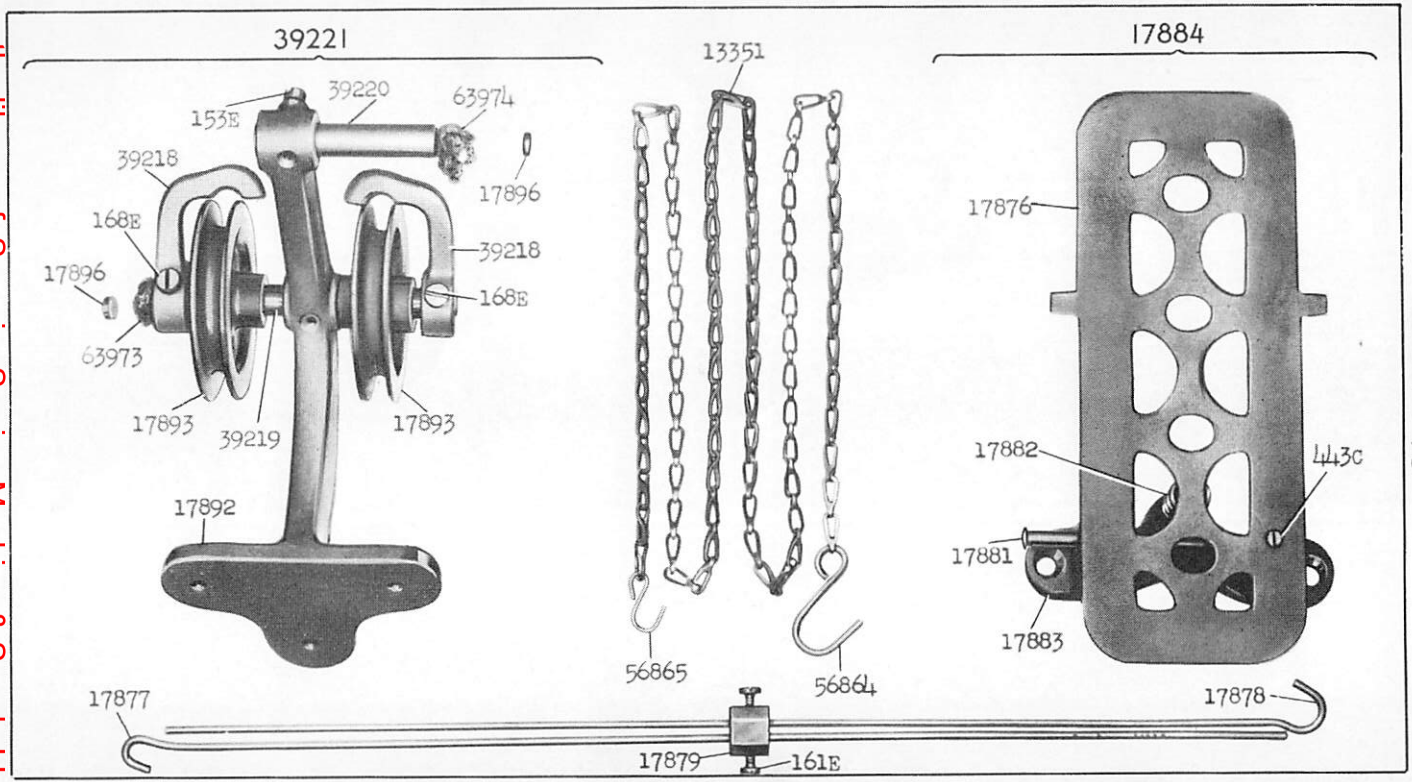

23159 - 1/3

23160 - 1/4

60773

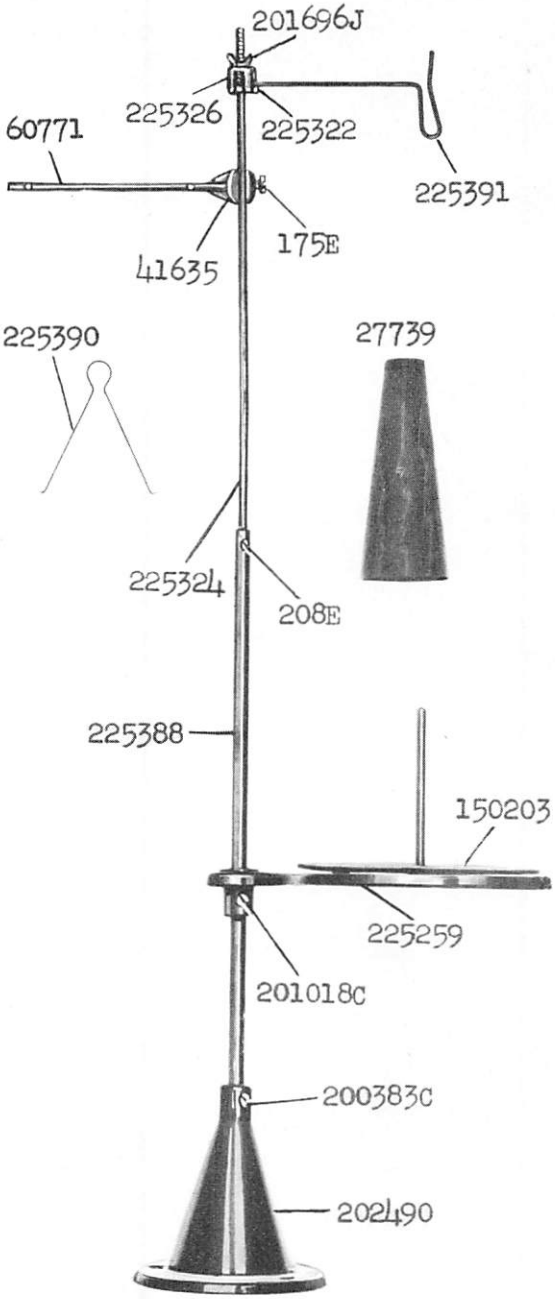

From the library of: Superior Sewing Machine & Supply LLC

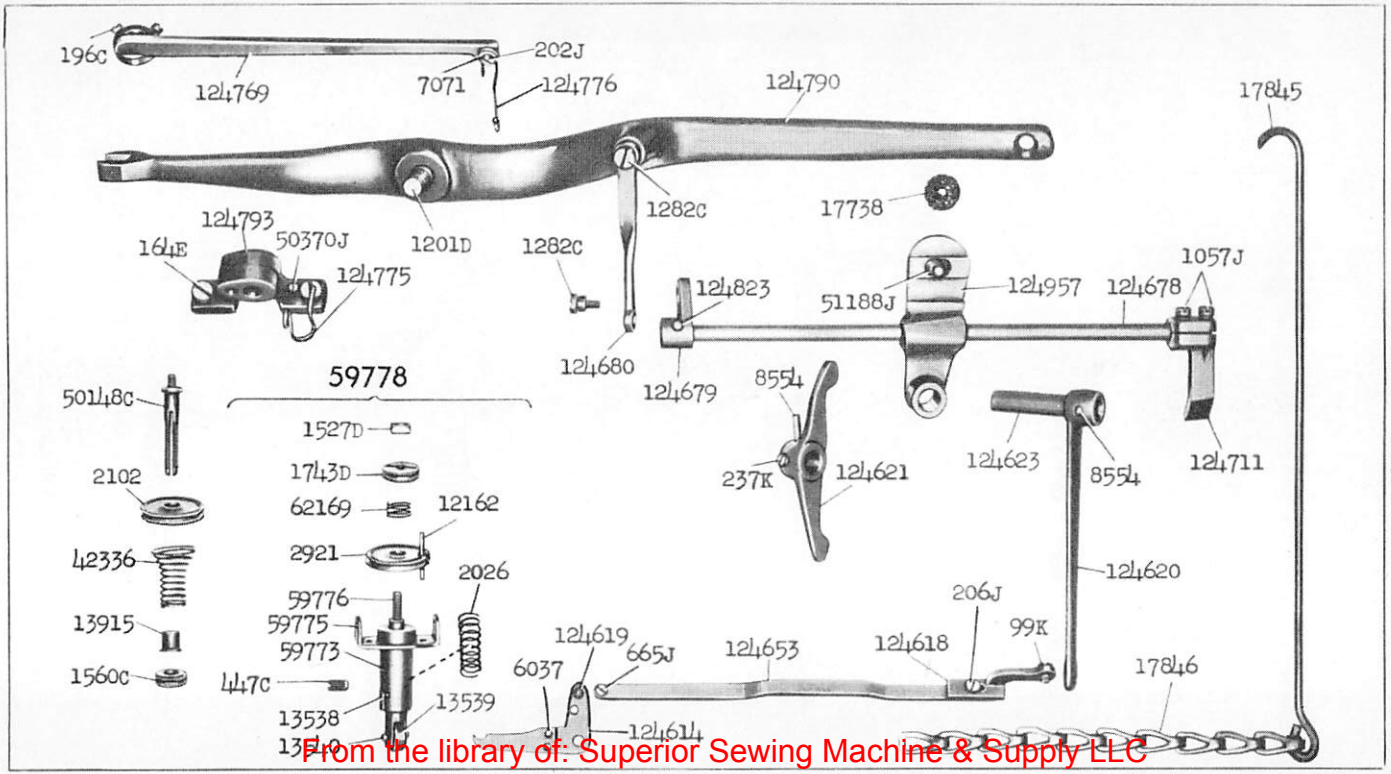
196C
124769
202J
7071
124776
124790
17845
1282C
17738
124793
50370J
164E
1201D
1282C
124775
124823
51188J
124957
124678
1057J
124680
124679
59778
85554
501148C
1527D
237K
124621
124623
85554
124711
2102
1743D
62169
12162
42336
2921
2026
124620
59776
206J
13915
59775
124619
665J
124653
124618
99K
59773
6037
1560C
447C
13538
13539
124614
17846
From the library of: Superior Sewing Machine & Supply LLC

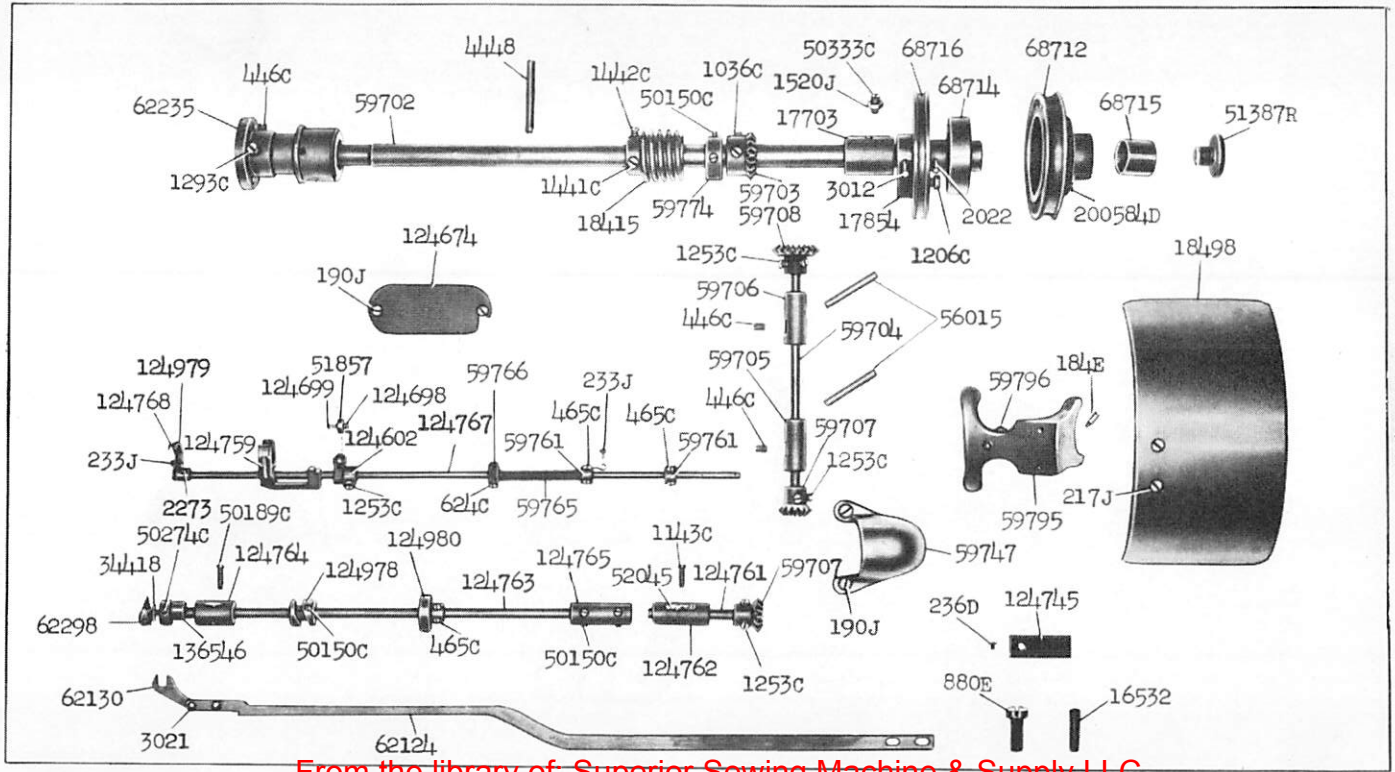

23167 - 1/4

From the library of: Superior Sewing Machine & Supply LLC

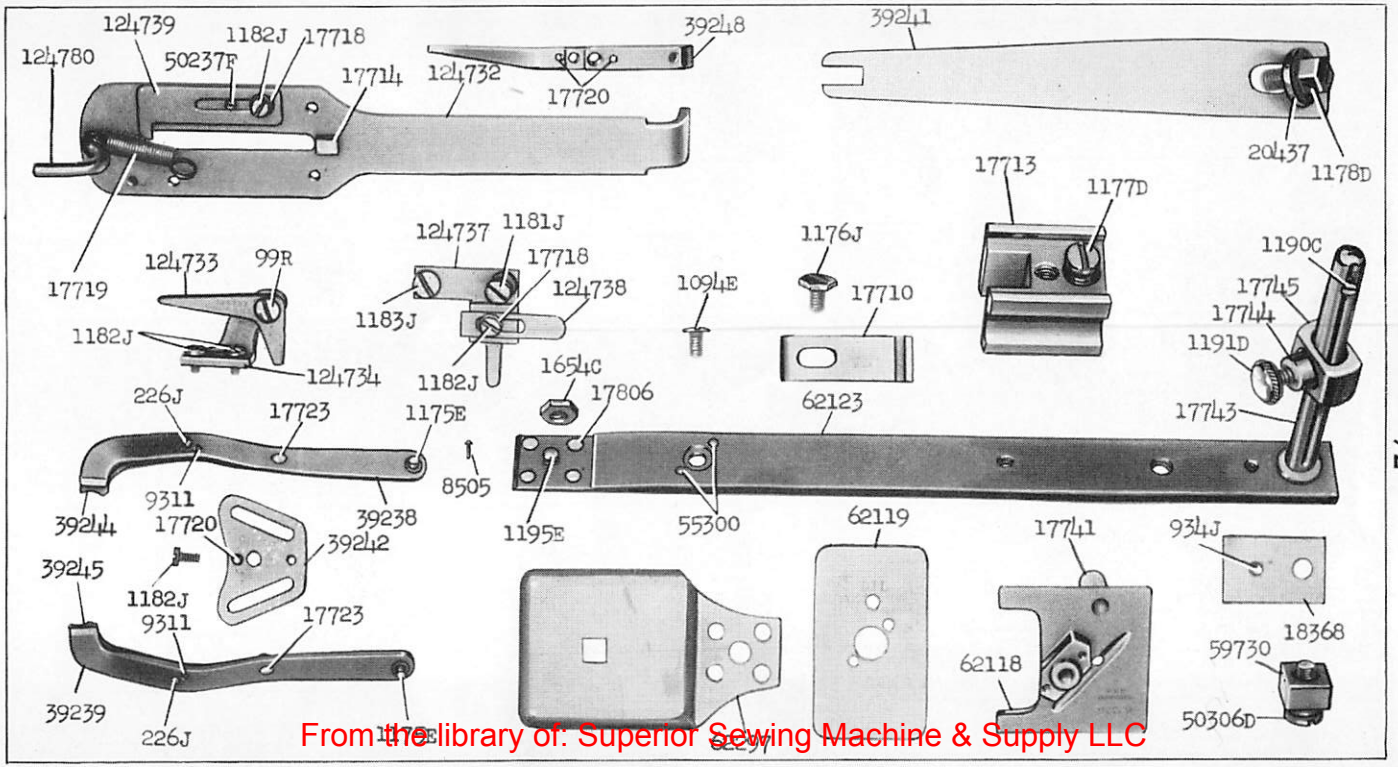

From the library of: Superior Sewing Machine & Supply LLC

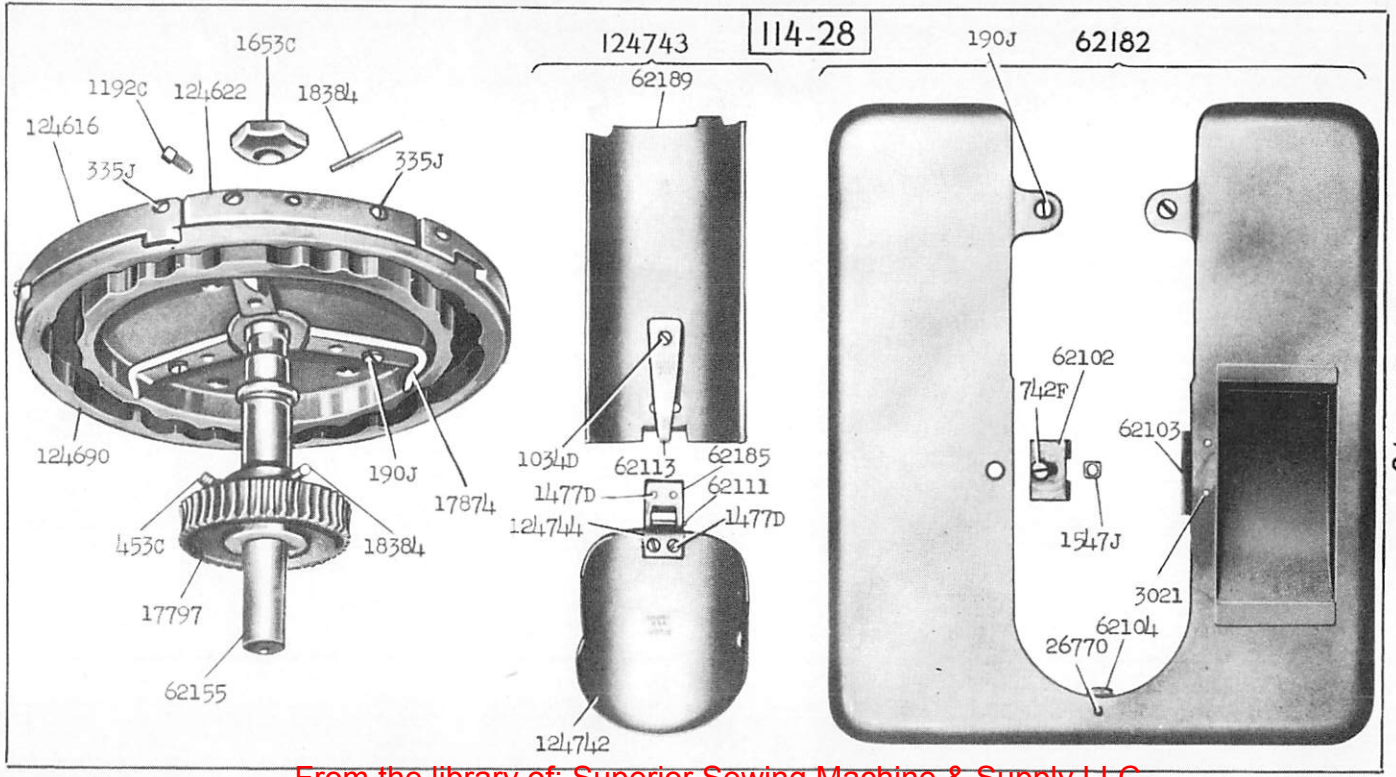

From the library of: Superior Sewing Machine & Supply LLC

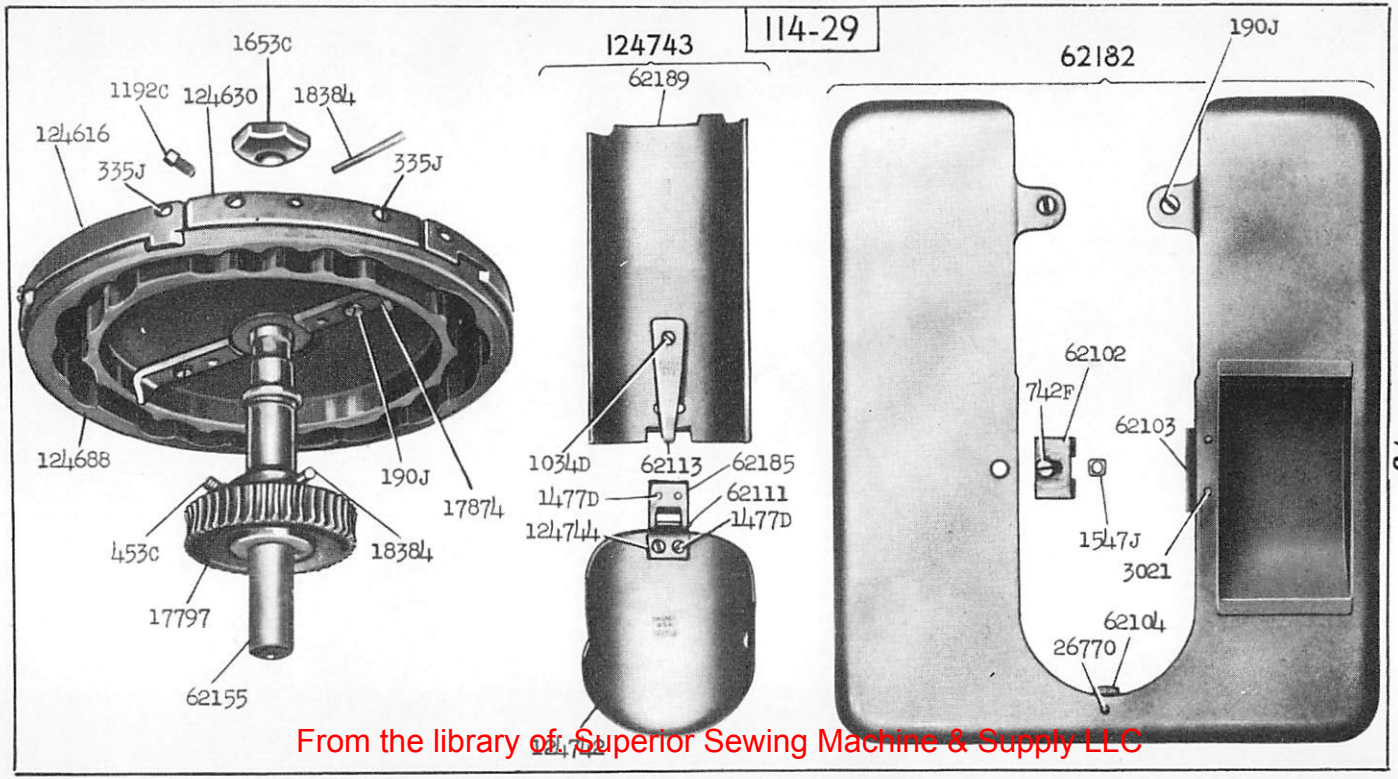

From the library of: Superior Sewing Machine & Supply LLC

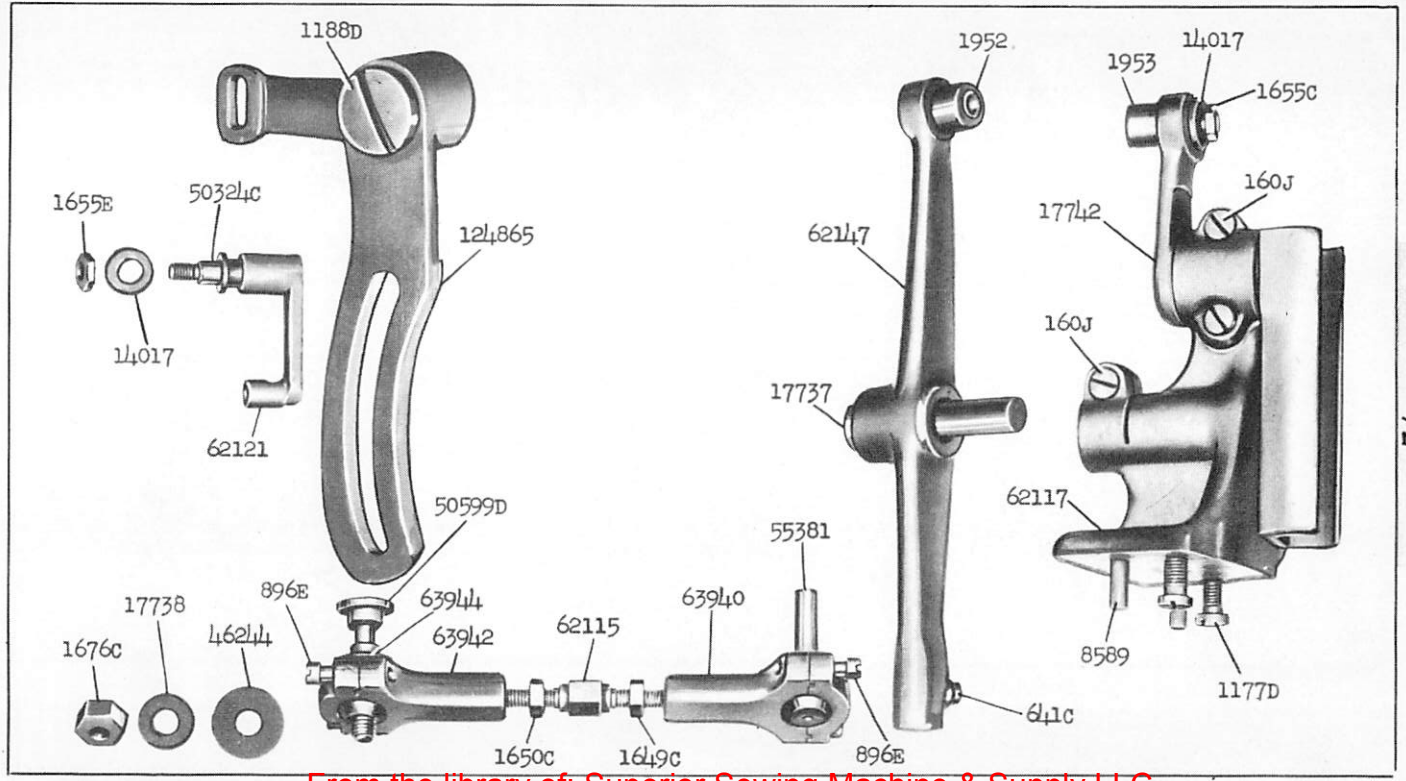

23171 - 1/2

From the library of: Superior Sewing Machine & Supply LLC

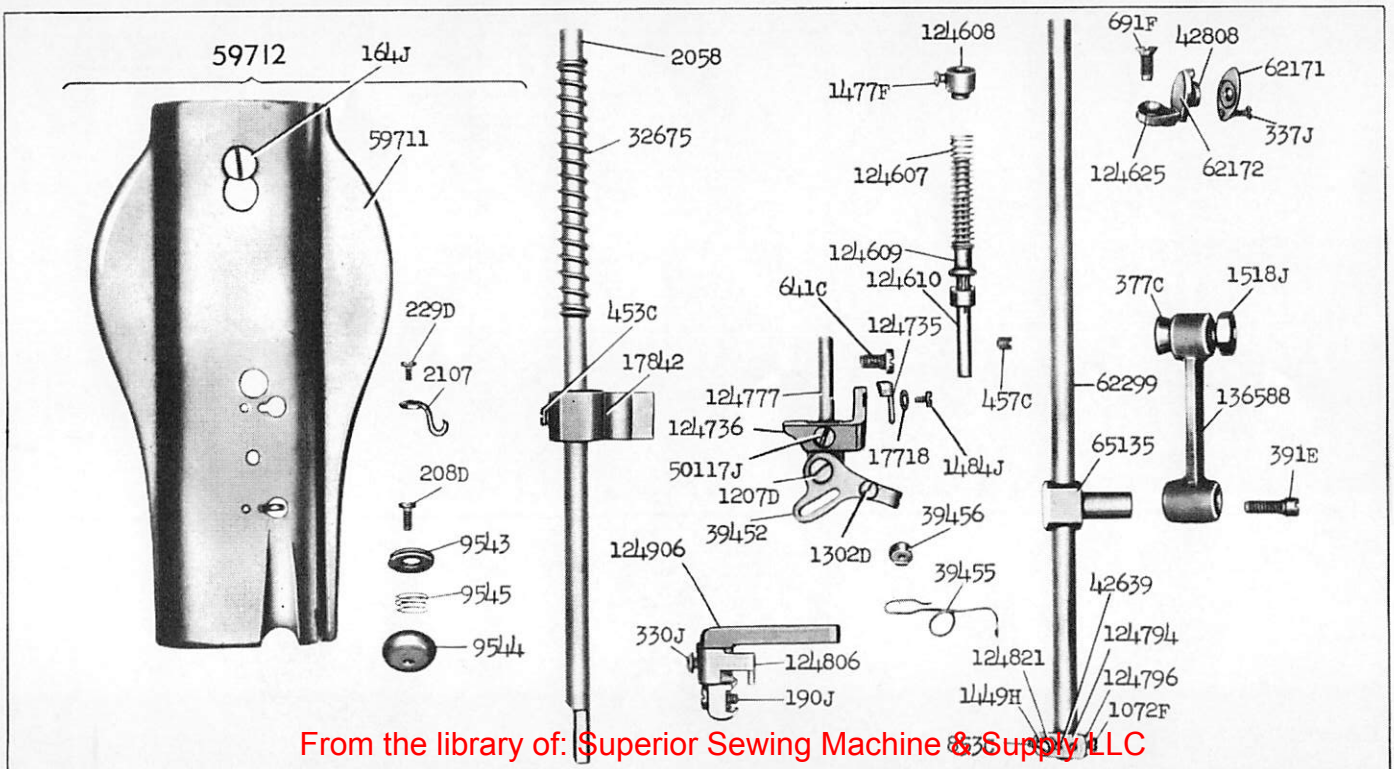

From the library of: Superior Sewing Machine & Supply LLC

23173 - 2/3

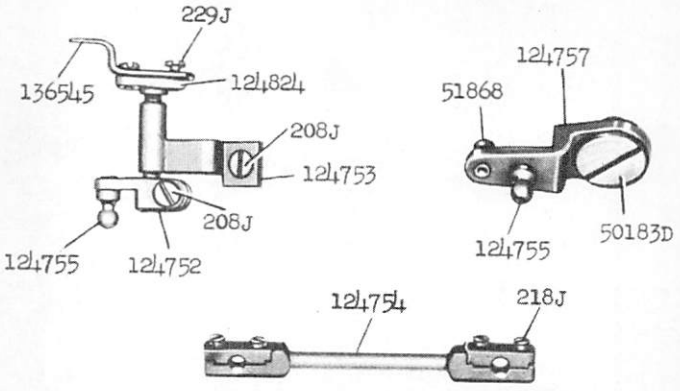

124982

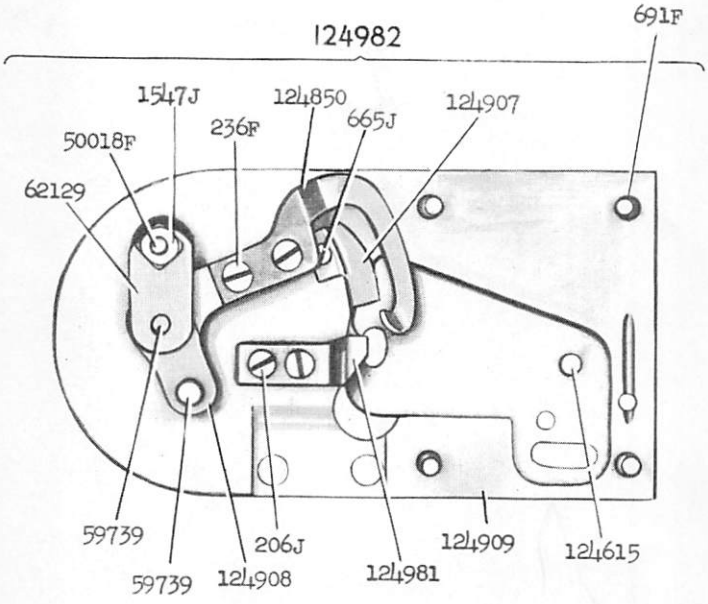

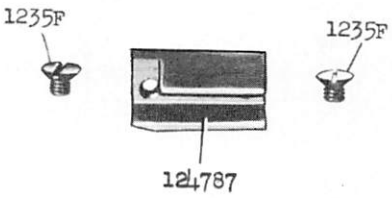

From the library of: Superior Sewing Machine & Supply LLC

23174 - ½

59797

From the library of: Superior Sewing Machine & Supply LLC

Genuine Singer Needles should be used in Singer Machines.
These Needles and their Containers are marked with the Company's Trade Mark "SIMANCO." 1

Needles in Containers marked
"For Singer Machines"
are not Singer made needles. 2

From the library of: Superior Sewing Machine & Supply LLC

From the library of: Superior Sewing Machine & Supply LLC