Finest Quality

Union Special
INDUSTRIAL SEWING EQUIPMENT

ILLUSTRATED PARTS LIST

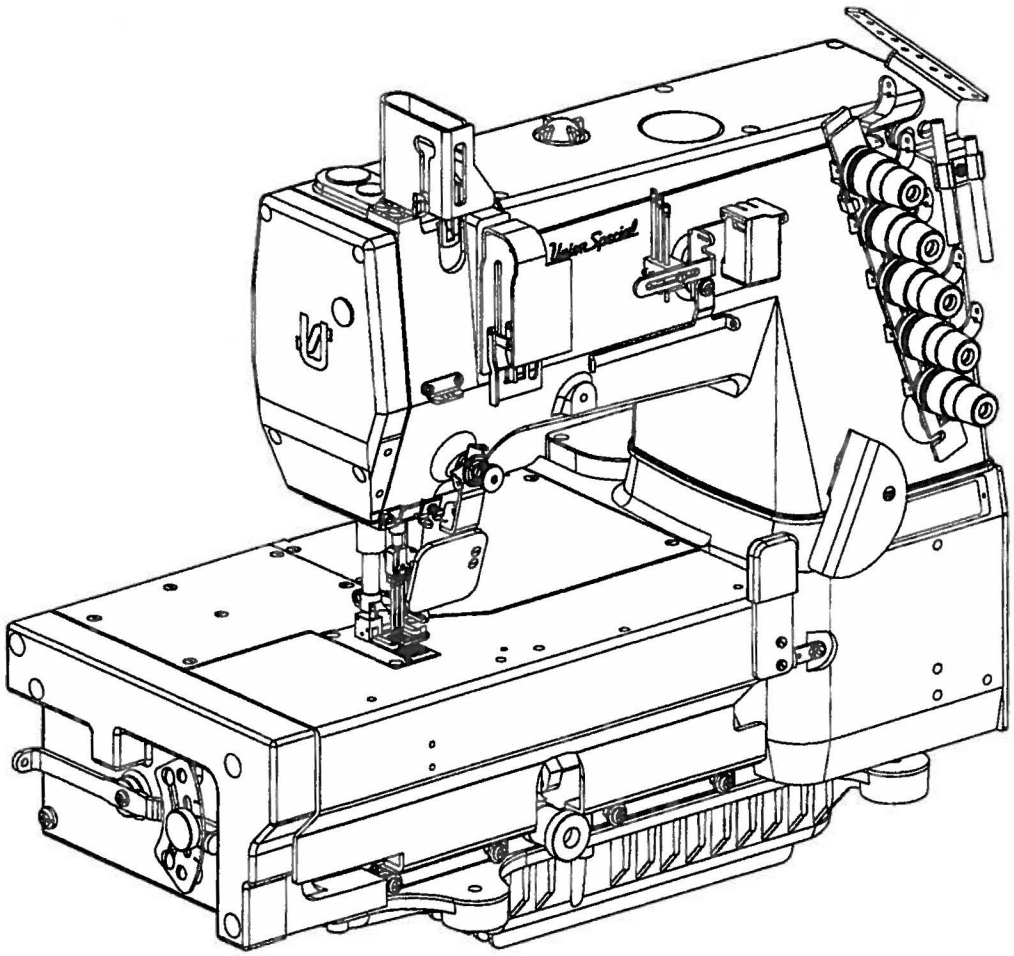

FS300 Series, Differential Feed, High Speed Lap Seaming Machines

MANUAL NO. PT9501

STYLES

FS332L01–2C

FS332L01–3B

From the library of: Superior Sewing Machine & Supply LLC

Manual No. PT9501 Illustrated Parts List for FS300 Series Machines

First Edition Copyright 1995
By
Union Special Corporation Rights Reserved In All Countries
Printed in U.S.A. July 1995

I-5th.

PREFACE

This parts manual has been prepared to assist you in locating individual parts or assemblies on FS300 Series machines. It can be used in conjunction with Union Special Operator's Manual OP9420 and Engineer's Manual EN9421.

It is the desire of Union Special that each machine run at its optimum performance. Parts listed in this manual are designed specifically for your machine and are manufactured with utmost precision to assure long lasting service.

This manual has been comprised on the basis of available information. Changes in design and/or improvements may incorporate a slight modification of configuration in illustrations or part numbers.

On the following pages are illustrations and terminology used in describing the parts used on FS300 Series machines.

From the library of: Superior Sewing Machine & Supply LLC

CORRECTION

Please Note: In Union Special Parts Manual PT9501...

There is a correction on page 11.

•Loctite adhesive CE59 is used on sponge 50393HS, Reference Number 22..
•The text should be as follows...

22.	50393HS	Sponge	1
-	CE59	Loctite Adhesive, (not shown), for sponge	-

There is a correction on page 26.

•Reference Numbers 2 thru 12, of the oil pump assembly should be rotated 180°
•The illustration should be as follows...

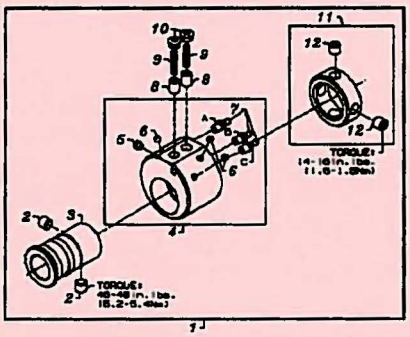

There is a correction on page 35.

•Reference Number 2, Screw, SS8660612TP, description change...
•The text should be as follows...

1.	50340D	Feed Eccentric, main	1
2.	SS8660612TP	Screw, for feed eccentric, main	2

There is a correction on page 42.

•Reference Number 21, Guide, should be rotated 90°
•The illustration should be as follows...

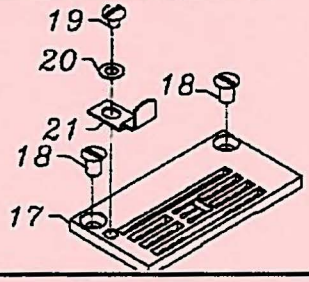

There is a correction on page 49.

•Reference Numbers 2 thru 7 are not subassemblies of Thread Stand, 21101W5
•The text should be as follows...

1.	21101W5	Thread Stand	1
2.	35095B	Isolator	4
3.	G21201	Screw Driver, for needle head	1
4.	660-240	Thread Tweezer	1
5.	660-264	S-Hook	2
6.	421D34	Chain	1
7.	28604R	Oil, (1 pint)	2
8.	128GBS 075/029	Needles	1

7/25/1995

From the library of: Superior Sewing Machine & Supply LLC

CONTENTS

- PREFACE 2
- SAFETY RULES 4
- IDENTIFICATION OF MACHINES 5
- CLASS DESCRIPTION 5
- STYLE OF MACHINES 5
- ILLUSTRATIONS 5
- IDENTIFYING PARTS 6
- NEEDLES 6
- BUSHINGS 9
- NEEDLE BAR 11
- UPPER MAIN SHAFT 13
- SPREADER 15
- THREAD GUIDE 17
- TENSION RELEASE & THREAD TENSION 19
- PRESSER FOOT LIFT 21
- COVERS, UPPER ARM 23
- LOWER MAIN SHAFT 25
- LUBRICATION 27
- LOOPER DRIVE 29
- NEEDLE GUARD 31
- LOOPER THREAD TAKE-UP 33
- FEED DRIVE MECHANISM 35
- FEED DRIVE MECHANISM 37
- COVERS, LOWER BED 39
- COVERS, LOWER BED 41
- SEWING PARTS 43
- NEEDLE DIPPER (EXTRA SEND CHARGE) 45
- TABLING (EXTRA SEND CHARGE) 47
- ACCESSORIES 49
- NUMERICAL INDEX OF PARTS 50
- NUMERICAL INDEX OF PARTS 51
- NOTES 52
- NOTES 53
- NOTES 54
- NOTES 55

From the library of: Superior Sewing Machine & Supply LLC

SAFETY RULES

1. Before putting the machines described in this manual into service, carefully read the instructions. The starting of each machine is only permitted after taking notice of the instructions and by qualified operators.

   IMPORTANT! Before putting the machine into service, also read the safety rules and instructions from the motor supplier.

2. Observe the national safety rules valid for your country.

3. The sewing machines described in this instruction manual are prohibited from being put into service until it has been ascertained that the sewing units which these sewing machines will be built into, have conformed with the EC Council Directives (89/392/EEC, Annex II B).

   Each machine is only allowed to be used as foreseen. The foreseen use of the particular machine is described in paragraph "STYLES OF MACHINES" of this instruction manual. Another use, going beyond the description, is not as foreseen.

4. All safety devices must be in position when the machine is ready for work or in operation. Operation of the machine without the appertaining safety devices is prohibited.

5. Wear safety glasses.

6. In case of machine conversions and changes all valid safety rules must be considered. Conversions and changes are made at your own risk.

7. The warning hints in the instructions are marked with one of these two symbols:

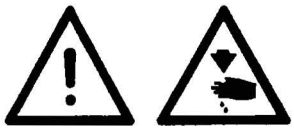

8. When doing the following the machine has to be disconnected from the power supply by turning off the main switch or by pulling out the main plug:

   8.1 When threading needle(s), looper, spreader etc.

   8.2 When replacing any parts such as needle(s), presser foot, throat plate, looper, spreader, feed dog, needle guard, folder, fabric guide etc.

   8.3 When leaving the workplace and when the workplace is unattended.

   8.4 When doing maintenance work.

   8.5 When using clutch motors without actuation lock, wait until the motor is stopped totally.

9. Maintenance, repair and conversion work (see item 8) must be done only by trained technicians or special skilled personnel under consideration of the instructions.

10. Any work on the electrical equipment must be done by an electrician or under direction and supervision of special skilled personnel.

11. Work on parts and equipment under electrical power is not permitted. Permissible exceptions are described in the applicable sections of standard sheet DIN VDE 0105.

12. Before doing maintenance and repair work on the pneumatic equipment, the machine has to be disconnected from the compressed air supply. In case of existing residual air pressure, after disconnecting from compressed air supply (i.e. pneumatic equipment with air tank), the pressure has to be removed by bleeding.

From the library of: Superior Sewing Machine & Supply LLC

IDENTIFICATION OF MACHINES

Each UNION SPECIAL machine is identified by a style number, which is stamped into the style plate affixed to the middle of the machine under the tension assembly. The serial number is stamped into the serial number plate affixed to the right rear base of the machine.

CLASS DESCRIPTION

Precision high speed, two or three needles, top coverstitch, differential feed flat bed machines. Totally enclosed feed and looper drive mechanism, automatic forced feed lubrication system with easily replaceable filter. Main feed has thumbscrew adjustment and differential feed has lever adjustment and independently driven rear needle guard.

STYLE OF MACHINES

FS332L01-3B_ _ LAP SEAMING. Three needle, top coverstitch, tandem differential feed. - Typical Application - For crotch seaming operations on men's and boy's knit underwear. Seam Specifications 605 LSa-1. Standard gauge numbers 056, (7/32", 5.6mm) and 060, (15/64", 6.0mm). Recommended needle 128GBS, needle range sizes 065/025 - 090/036. Maximum recommended speed, depending on application, is up to 6500 R.P.M.

FS332L01-2C_ _ LAP SEAMING. Two needle, top coverstitch, tandem differential feed. - Typical Application - For crotch seaming operations on men's and boy's knit underwear. Seam Specifications 602 LSa-1. Standard gauge number 040, (5/32", 4.0mm). Recommended needle 128GBS, needle range sizes 065/025 - 090/036. Maximum recommended speed, depending on application, is up to 6500 R.P.M.

ILLUSTRATIONS

This manual has been arranged to simplify ordering repair parts. Exploded views of various sections of the mechanism are shown so that the parts may be seen in their actual position in the machine. On the page opposite the illustration will be found a listing of the parts with their part numbers, description and the number of pieces required in the particular view being shown.

Numbers in the first column are reference numbers only, and merely indicate the position of the part in the illustration. The reference number should never be used in ordering parts. Always use the part number listed in the second column.

Component parts of sub-assemblies which can be furnished for repairs are indicated by indenting their descriptions under the description of the main sub-assembly. As an example refer to the following text.

5.	50366B	Needle Thread Strike-Off Assembly	1
6.	50358V	Needle Thread Strike-Off	1
7.	50370F	Thread Strike-Off Component	1
8.	SS706031OSP	Screw, for plate strike-off	1

When a part is common to all machines covered in this manual, no specific usage will be mentioned in the description. However, when the parts for the various machines are not the same, the specific usage will be mentioned in the description and, if necessary, the difference will be shown in the illustration.

*Ref. No. showing no Part No. is for location only. Part is not for sale separately.

A numerical index of all the parts shown in this manual is located at the back. This will facilitate locating the illustration and description when only a part number is known.

From the library of: Superior Sewing Machine & Supply LLC

IDENTIFYING PARTS

Where construction permits, each part is stamped with its part number. On some of the smaller parts and on those where construction does not permit, an identification letter is stamped in to distinguish the part from similar ones.

PLEASE NOTE: Part numbers represent the same part, regardless of which manual they appear. On all orders please include part number, name and style of machine for which the part was ordered.

For optimum performance use only genuine Union Special replacement parts.

NEEDLES

Each needle has both a type and size number. The type number denotes the kind of shank, point, length, groove, finish and other details. The size number, stamped on the needle shank, denotes the largest diameter of the blade measured between the shank and the eye. Collectively, the type number and size number represent the complete symbol which is given on the label of all needles packed and sold by Union Special.

TYPE	DESCRIPTION
128 GBS	Short, double groove, struck groove, ball eye, spotted, ball point, chromium plated- Sizes available 065/025, 070/027, 075/029, 080/032, 090/036.

When changing the needle, make sure it is fully inserted in the needle holder before the screw is tightened.

When ordering needles, please use the complete type and size numbers as printed on the package to ensure prompt and accurate processing of your order. A complete order should read as follows: "100 needles, type 128 GBS, size 075/029".

From the library of: Superior Sewing Machine & Supply LLC

FS300 SERIES
BUILDING BLOCK STYLE DESIGNATION SYSTEM

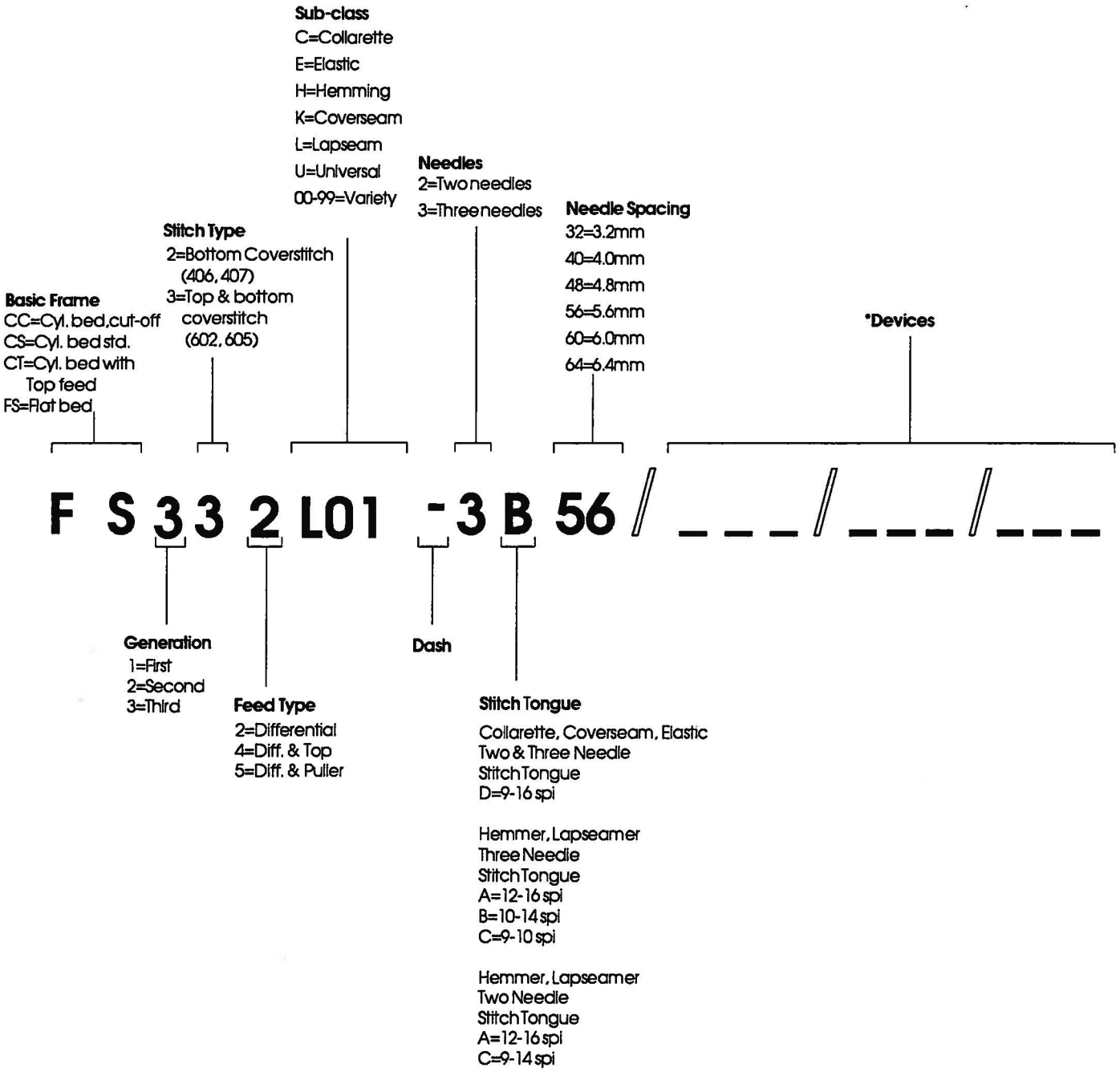

From the library of: Superior Sewing Machine & Supply LLC

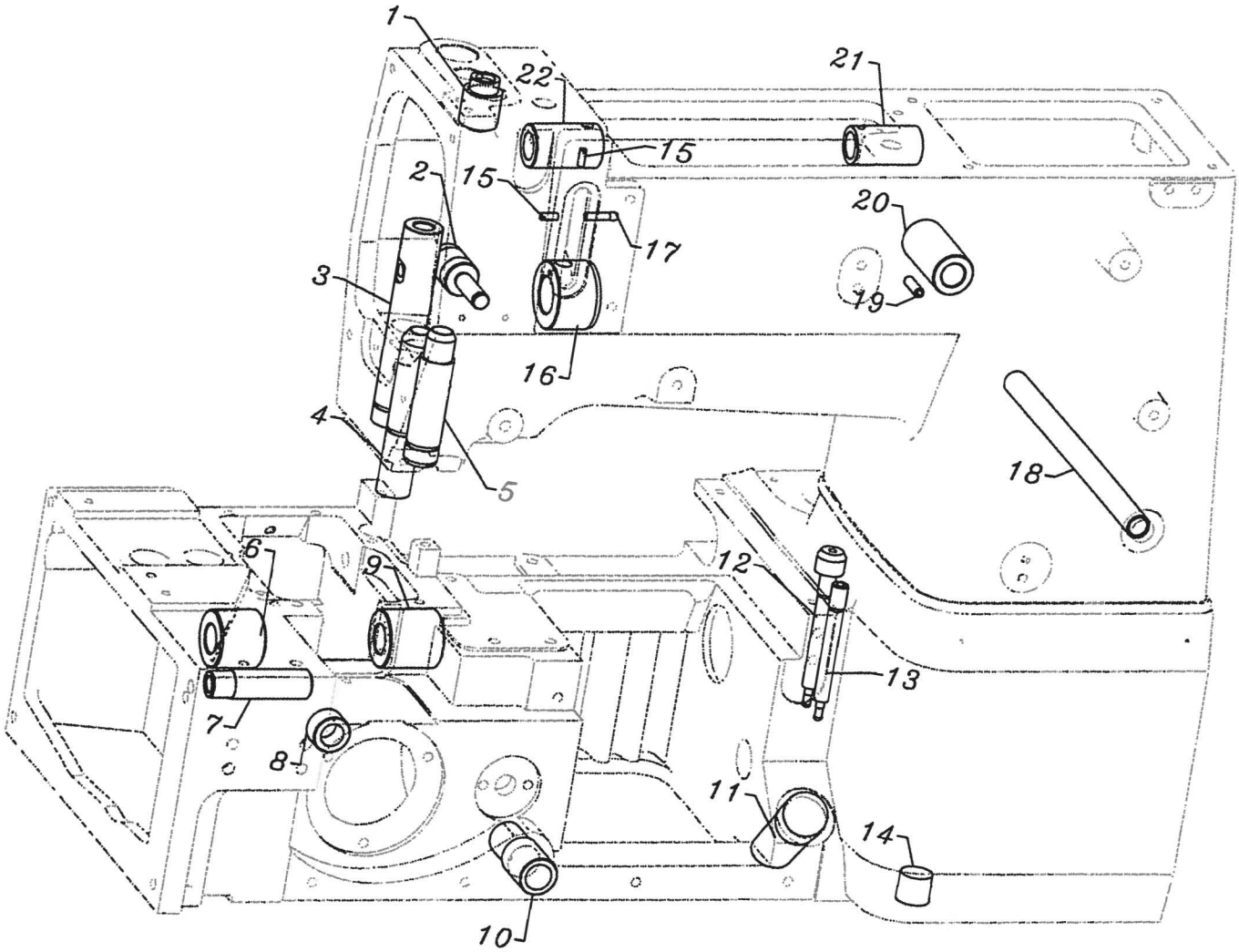

From the library of: Superior Sewing Machine & Supply LLC

BUSHINGS

Ref. No.	Part No.	Description	Amt. Req.
1.	50354J	Bushing, for needle bar, upper	1
2.	50332U	Pin, for front lifter lever	1
3.	50347L	Bushing, for spreader drive	1
4.	50330CZ	Bushing, for presser bar	1
5.	50354H	Bushing, for needle bar, lower	1
6.	50344AH	Bushing, for lower mainshaft, left	1
7.	50368AB	Bushing, for needle lever	1
8.	50344E	Bearing	1
9.	50344AJ	Bushing, for lower mainshaft, right	1
10.	35036AB	Bushing, for needle guard	1
11.	50393GE	Oil Sight Gauge	1
12.	50393EY	Fitting, filter	1
13.	50393FU	Fitting, oil tube	1
14.	22571L	Screw, for drain plug	1
15.	SS8090710SP	Screw	2
16.	50393ET	Bearing	1
17.	50393FL	Brass Tube, front	1
18.	50392AB	Bushing, for tension release	1
19.	PS0400142KH	Pin	1
20.	50381E	Bushing, for lifter lever, back	1
21.	50347E	Bushing, for spreader, rear	1
22.	50347F	Bushing, for spreader, front	1

From the library of: Superior Sewing Machine & Supply LLC

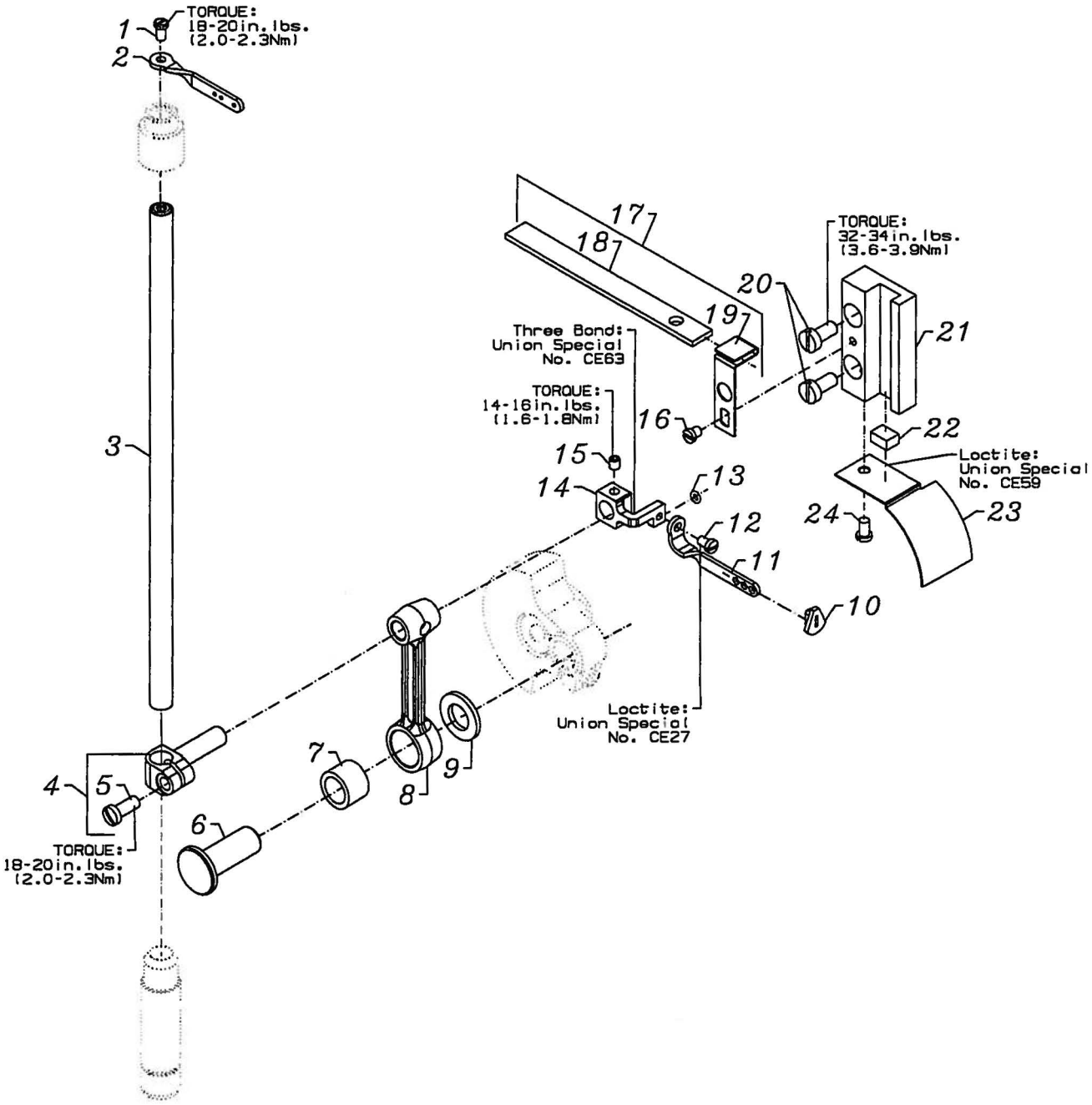

From the library of: Superior Sewing Machine & Supply LLC

NEEDLE BAR

Ref. No.	Part No.	Description	Amt. Req.
1.	SS4080620TP	Screw	1
2.	50323P	Needle Bar Eyelet	1
3.	50317B	Needle Bar	1
4.	50355AM	Needle Bar Clamp	1
5.	SS7111120TP	Screw	1
6.	50352	Pivot Pin	1
7.	661-259B	Needle Bearing Cage	1
8.	50355AN	Connecting Rod	1
9.	50351A	Washer	1
10.	50393JP	Eyelet Seal	1
11.	50358X	Needle Thread Eyelet	1
12.	SS7080520SP	Screw	1
-	CE27	Loctite Adhesive, (not shown), for screw	-
13.	660-980	"O" Ring	1
14.	50354F	Slide Block	1
-	CE63	Three Bond Adhesive, (not shown), for slide block	-
15.	SS8110422TP	Screw	1
16.	SS6090440SP	Screw, for support bracket	1
17.	50383M	Support Bracket Assembly	1
18.	50393HW	Felt, for slide block access hole	1
19.	50383L	Support Bracket	1
20.	SS6121010SP	Screw	2
21.	50354G	Slide Block Guide	1
22.	50393HS	Sponge	1
23.	50394AF	Slide Block Guide Cover	1
-	CE59	Loctite Adhesive, (not shown), for slide block cover guide	-
24.	SS6090620SP	Screw	1

From the library of: Superior Sewing Machine & Supply LLC

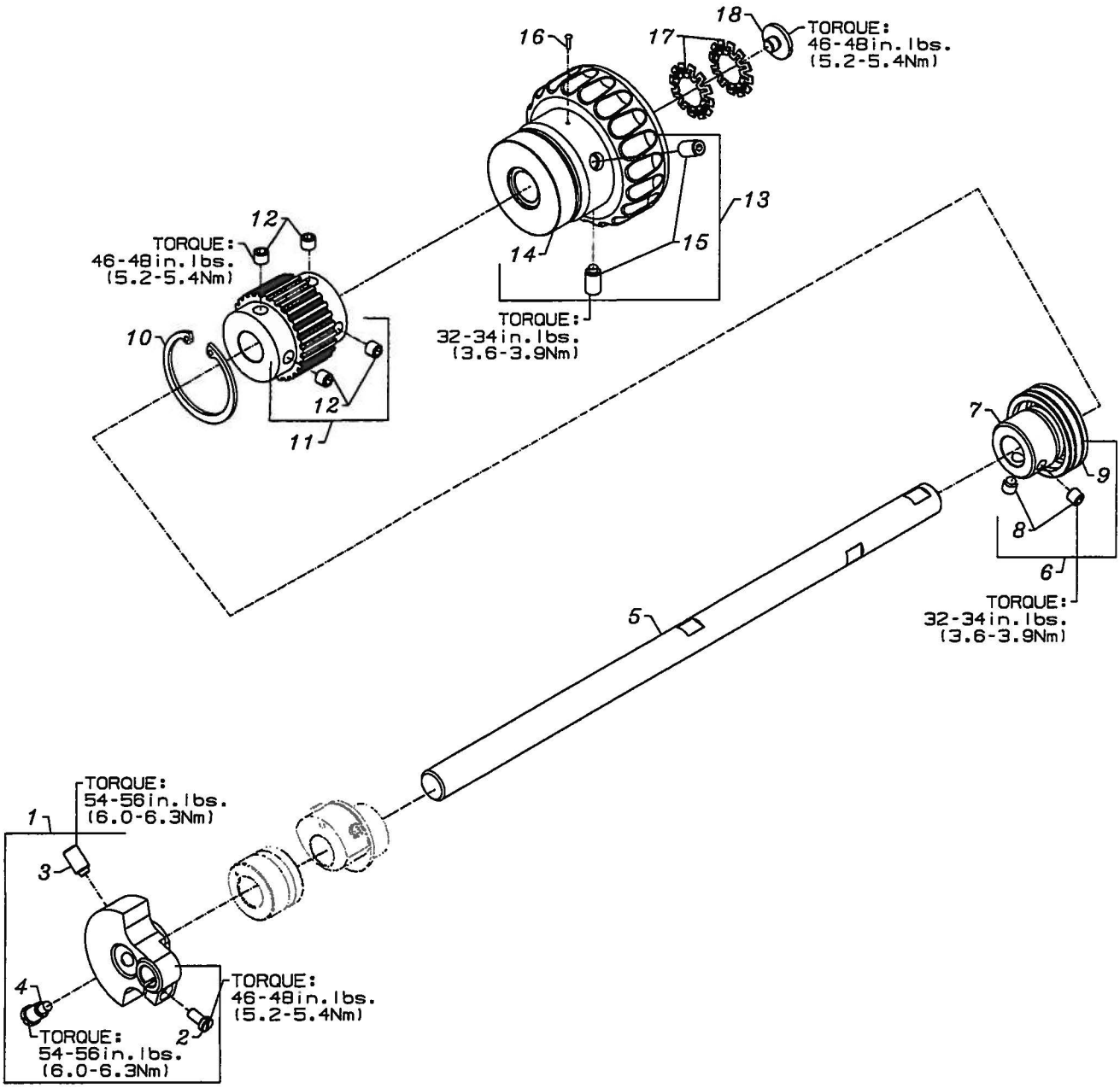

From the library of: Superior Sewing Machine & Supply LLC

UPPER MAIN SHAFT

Ref. No.	Part No.	Description	Amt. Req.
1.	50391	Counter Weight	1
2.	SS7111120TP	Screw, for counter weight	1
3.	SS8681412TP	Screw, for counter weight	1
4.	SS7681410TP	Screw, for counter weight	1
5.	50322AF	Upper Main Shaft	1
6.	50335BD	Bearing Adapter Assembly	1
*7.		Bearing Adapter	1
8.	SS8660612TP	Screw, for bearing adapter	2
*9.		Ball Bearing, for upper main shaft, middle	1
10.	661-262	Retaining Ring	1
11.	50342BE	Sprocket, for upper main shaft	1
12.	SS8661012TP	Set Screw, for sprocket	4
13.	50321F	Handwheel	1
*14.		Ball Bearing	1
15.	SS8681412TP	Set Screw, for handwheel	2
16.	660-1043	Tack Pin, for handwheel	1
17.	661-261	Load Ring, for lower main shaft	2
18.	SS7660520SP	Screw, for handwheel preload	1

*NOTE: Not sold separately.

From the library of: Superior Sewing Machine & Supply LLC

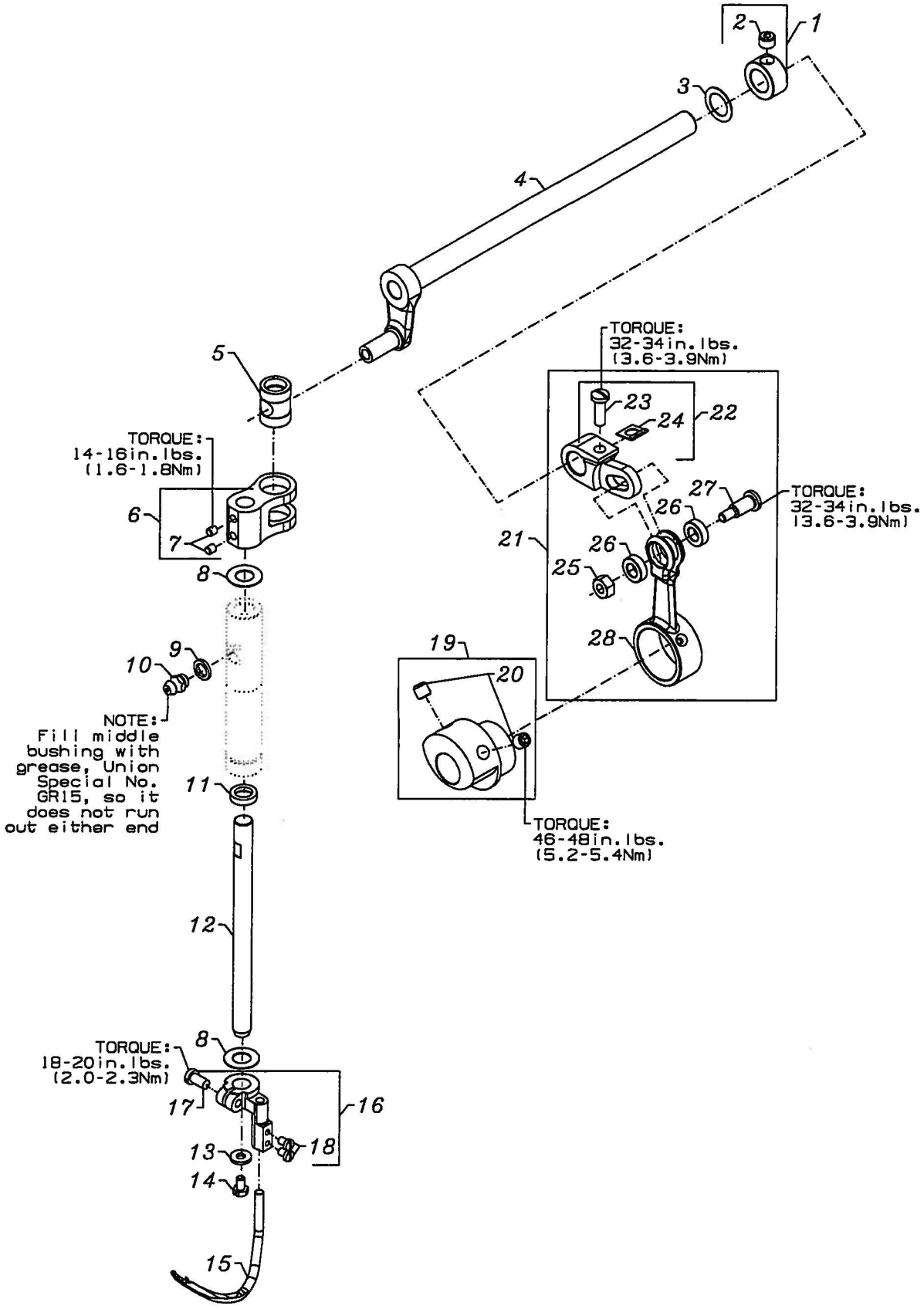

From the library of: Superior Sewing Machine & Supply LLC

SPREADER

Ref. No.	Part No.	Description	Amt. Req.
1.	50335AW	Collar, for spreader shaft	1
2.	SS8660512TP	Set Screw	1
3.	96162B	Washer	1
4.	50360B	Crankshaft, for spreader assembly	1
5.	50347J	Pin, for spreader rocker	1
6.	50347C	Lever, for spreader holder shaft	1
7.	SS8110422TP	Set Screw	2
8.	61351C	Washer	2
9.	50335AV	Collar	1
10.	50362	Lubrication Fitting	1
11.	660-739	Oil Seal	1
12.	50347G	Shaft, for spreader, vertical	1
13.	53678N	Washer	1
14.	SS9090640SP	Hex Screw, for vertical shaft	1
15.	50360E	Spreader	1
16.	50346A	Spreader Holder	1
17.	SS7110910TP	Screw	1
18.	SS7080510TP	Screw	2
19.	50360	Eccentric, spreader drive	1
20.	SS8660612TP	Screw	2
21.	29126FL	Spreader Crank Rod Assembly	1
22.	50360C	Spreader Shaft Driving Arm	1
23.	SS7121410TP	Screw	1
24.	B2531704000	Bind Washer	1
25.	NS6110530SP	Hex Nut, for spreader drive	1
26.	50347K	Collar, for spreader driving arm	2
27.	SD0641103TP	Stud	1
28.	50360D	Connecting Rod, for spreader drive	1
-	28604X	Grease Gun (not shown, extra send charge)	1
-	GR15	Tube Of Grease, 14oz. (not shown, extra send charge)	1

From the library of: Superior Sewing Machine & Supply LLC

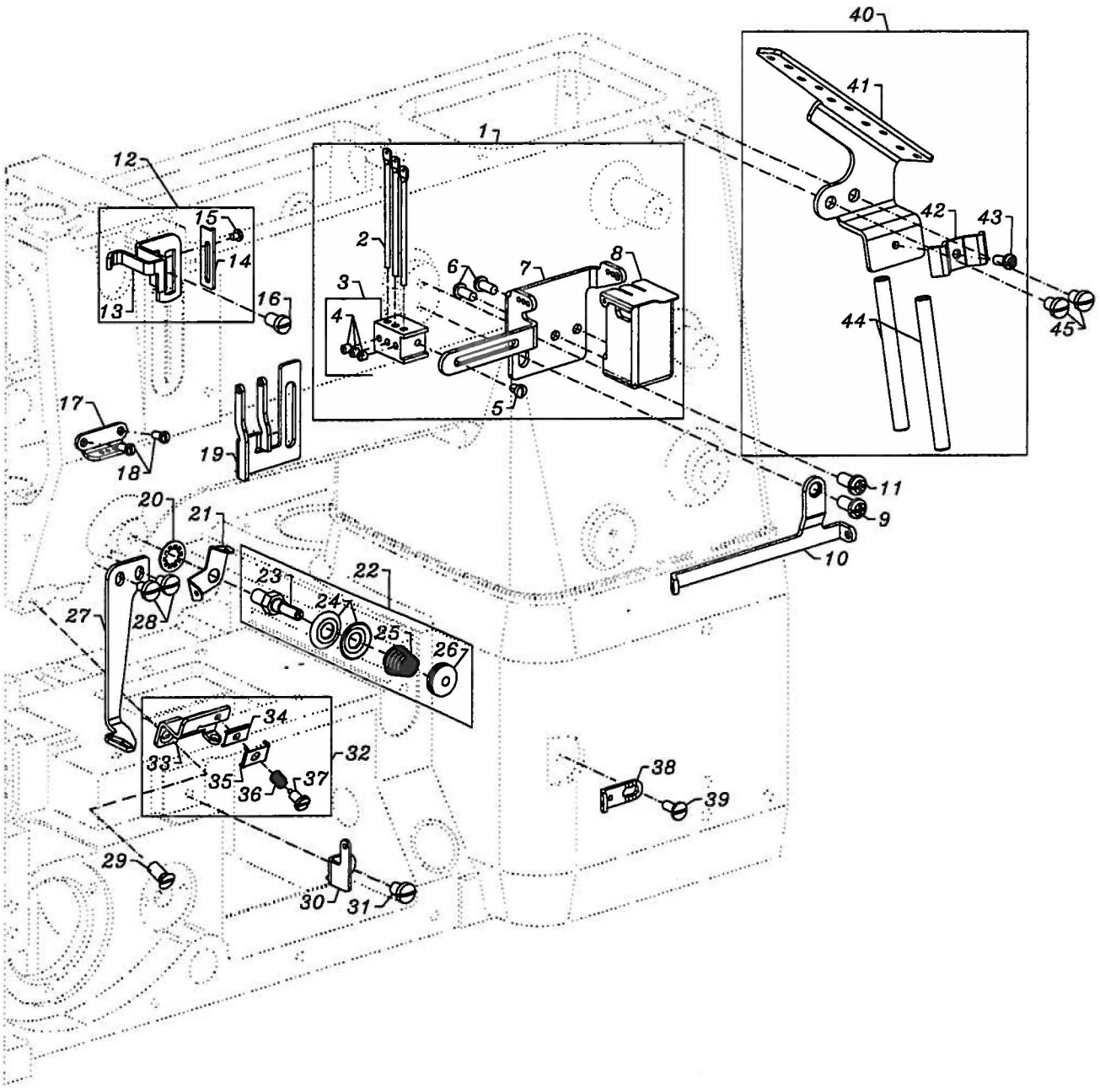

From the library of: Superior Sewing Machine & Supply LLC

THREAD GUIDE

Ref. No.	Part No.	Description	Amt. Req.
1.	50363CJ	Needle Thread Guide and Lubricator Assembly	1
2.	36271A	Adjusting Needle Thread Eyelet	3
3.	50358W	Holder, for needle thread eyelet	1
4.	SS8080310TP	Screw	3
5.	SS7080510TP	Screw, for holder eyelet	1
6.	SS4090815SP	Screw, for silicone tank	2
7.	50392V	Needle Thread Guide	1
8.	50393HH	Silicone Thread Lubricator	1
9.	SS4120915SP	Screw, for spreader thread guide	1
10.	50358U	Thread Guide, for spreader	1
11.	SS4120615SP	Screw, for needle thread guide	1
12.	50366B	Needle Thread Strike-Off Assembly	1
13.	50358V	Needle Thread Strike-Off	1
14.	50370F	Thread Strike-Off Component	1
15.	SS7060310SP	Screw, for plate strike-off	1
16.	SS7120710SP	Screw, for strike-off	1
17.	C50044E	Needle Thread Guide	1
18.	605A	Screw, for needle thread guide	2
19.	50392T	Eyelet	1
20.	652C16	Star Washer	1
21.	57844	Eyelet	1
22.	29475CG	Spreader Thread Tension Assembly	1
23.	50392AW	Tension Post	1
24.	50392AX	Tension Disc	2
25.	50392AY	Tension Spring	1
26.	50392AZ	Tension Nut	1
27.	50346	Thread Guide Spreader	1
28.	SS7090610SP	Screw, for spreader thread guide	2
29.	SS1121010SP	Screw, for thread guide	1
30.	50392AE	Looper Frame Eyelet	1
31.	SS7120640SP	Screw	1
32.	50357AD	Nipper Plate Assembly	1
33.	50392BA	Thread Guide	1
34.	50357V	Nipper Plate	1
35.	50357Y	Nipper Spring Plate	1
36.	B1135850000	Nipper Spring	1
37.	SD0380551SL	Shoulder Screw, for nipper	1
38.	12124202	Looper Frame Eyelet	1
39.	SS7090850SP	Screw	1
40.	50392AU	Thread Eyelet Assembly	1
41.	50392S	Lead-In Tension Eyelet	1
42.	50366A	Thread Eyelet Tube Bracket	1
43.	SS4090815SP	Screw, for tube bracket	1
44.	50366	Thread Eyelet Tube	2
45.	SS7120640SP	Screw, for lead-in eyelet	2

From the library of: Superior Sewing Machine & Supply LLC

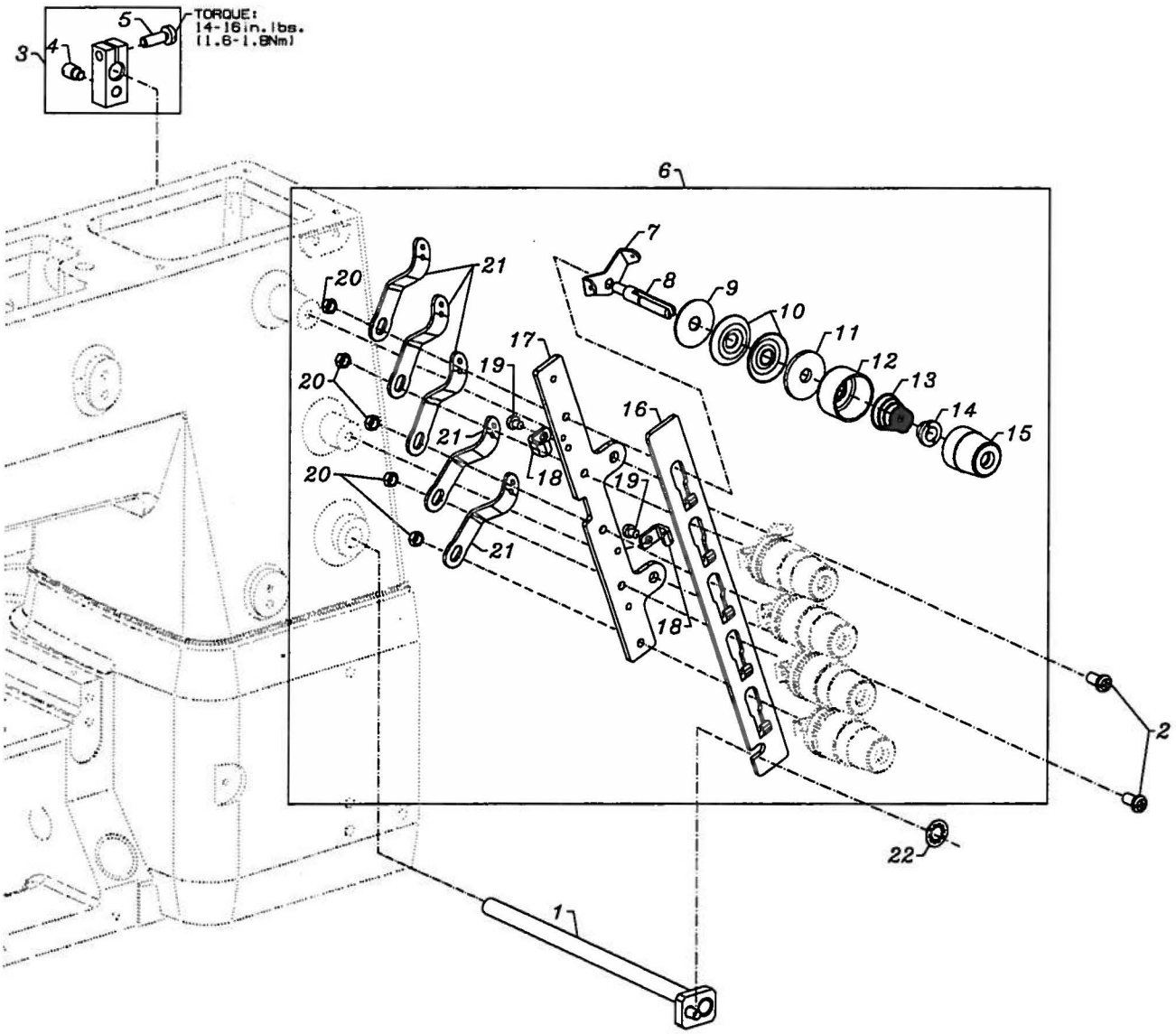

From the library of: Superior Sewing Machine & Supply LLC

TENSION RELEASE & THREAD TENSION

Ref. No.	Part No.	Description	Amt. Req.
1.	50392Z	Tension Release Shaft Assembly	1
2.	SS4120615SP	Screw, for tension assembly	2
3.	21657Y	Tension Release Lever Shaft Connection	1
4.	402	Base Spring Screw	1
5.	22596	Binder Screw	1
6.	50392Y	5 Thread Tension Assembly	1
7.	57892K	Thread Tension Eyelet	5
8.	56392G	Tension Post	5
9.	B3120352000	Tension Disc Felt	5
10.	B3126012000	Tension Disc	10
11.	B3120704000	Tension Disc Felt	5
12.	56392H	Spring Shield	5
13.	B3101804000	Spring, needle (red)	3
-	B3103804000	Spring, spreader (blue)	1
-	B3121804000	Spring, looper (plain)	1
14.	B3112704000	Ferrule, tension spring	5
15.	56392L	Knob, needle (red)	3
-	56392M	Knob, spreader (blue)	1
-	56392R	Knob, looper (plain)	1
16.	50392W	Tension Disc Separator	1
17.	50392X	Tension Bracket	1
18.	50392AV	Guide, for tension disc separator	2
19.	SS7090520SP	Screw, for guide	2
20.	NS6110420SP	Nut	5
21.	57865	Lead-In Thread Guide	5
22.	660-283A	Retainer Washer	1

From the library of: Superior Sewing Machine & Supply LLC

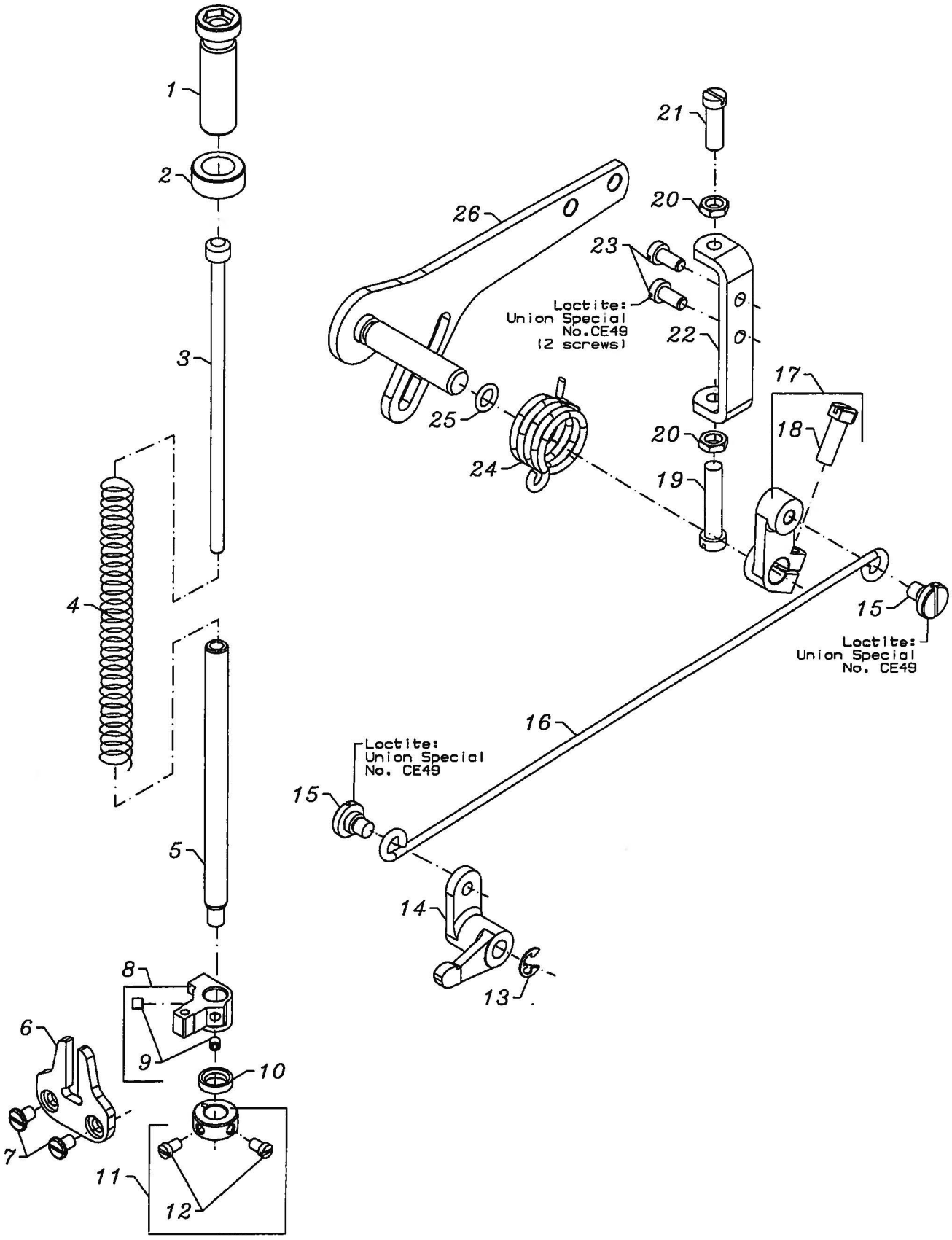

From the library of: Superior Sewing Machine & Supply LLC

PRESSER FOOT LIFT

Ref. No.	Part No.	Description	Amt. Req.
1.	11071602	Adjusting Screw, for spring	1
2.	11071701	Locking Nut	1
3.	C50056B	Spring Rod	1
4.	50357AA	Spring, for presser bar	1
5.	50335AF	Presser Bar	1
6.	50335AG	Guide Plate, for presser bar	1
7.	SS6110610TP	Screw, for guide plate	2
8.	50335AH	Presser Bar Guide	1
9.	SS8110422TP	Set Screw	2
10.	660-739	Oil Seal	1
11.	52888B	Collar	1
12.	22562	Screw	2
13.	RE0500000K0	Retaining Ring, for pin	1
14.	50381F	Lever, for lifter, front	1
15.	SD0790303SP	Screw, for wire connector	2
-	CE49	Loctite Adhesive, (not shown), for screw	-
16.	50355AR	Wire Connector	1
17.	50381G	Lever, for lifter, rear	1
18.	SS9151740CP	Hex Screw	1
19.	SS6153040SP	Screw, for adjusting stopper	1
20.	NS6150310SP	Hex Nut	2
21.	SS6151920SP	Screw, for adjusting stopper	1
22.	50332V	Stopper, for lifter lever	1
23.	SS6121010SP	Screw, for stopper	2
-	CE49	Loctite Adhesive, (not shown), for screw	-
24.	50381	Spring, for lifter lever	1
25.	RO068190100	"O" Ring	1
26.	50381B	Lifter Lever Assembly	1

From the library of: Superior Sewing Machine & Supply LLC

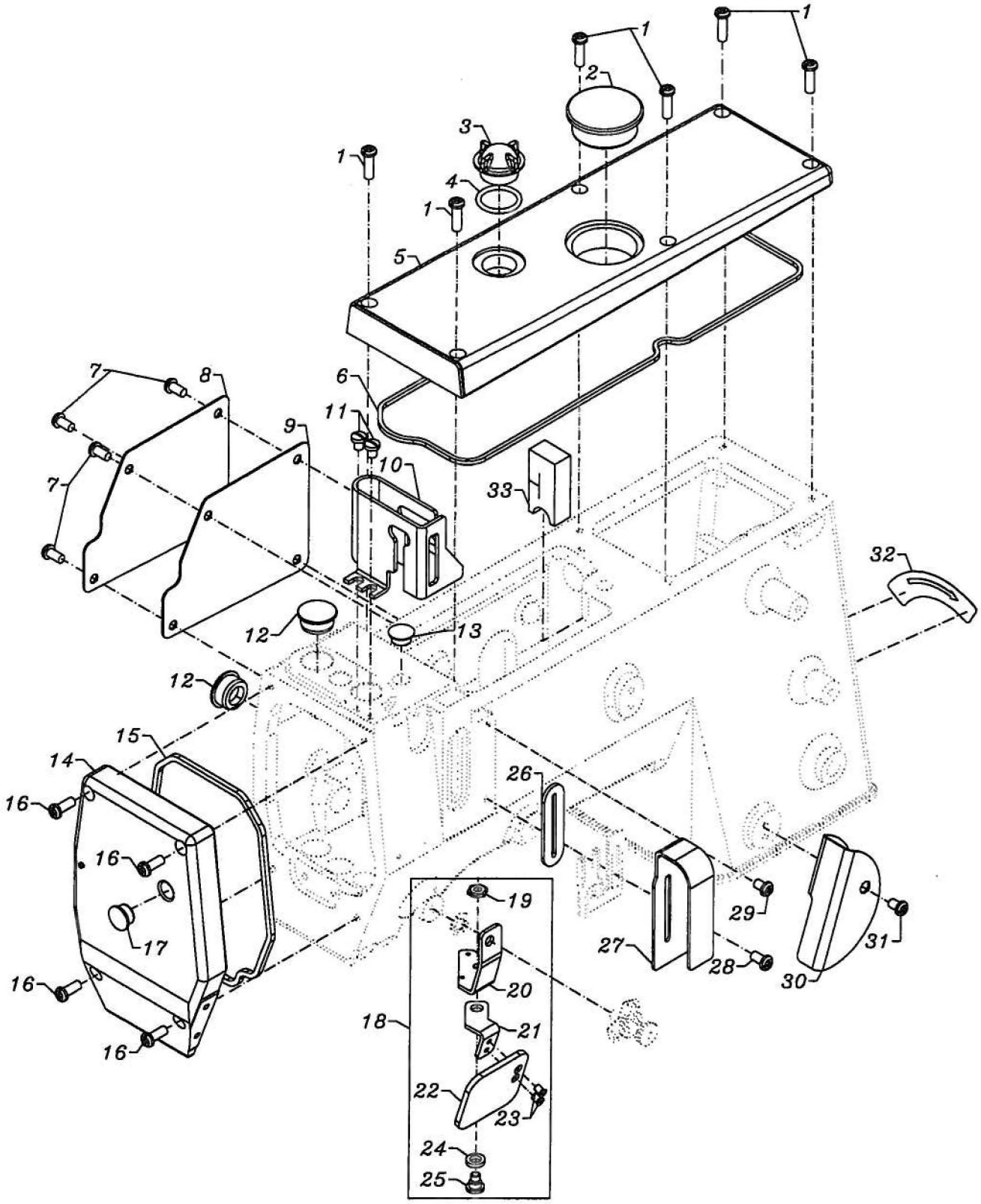

From the library of: Superior Sewing Machine & Supply LLC

COVERS, UPPER ARM

Ref. No.	Part No.	Description	Amt. Req.
1.	SS4121615SP	Screw, for top cover	6
2.	50393EU	Plug, for top cover	1
3.	B3530555000	Oil Sight Gauge, top	1
4.	RO195240100	"O" Ring, for oil sight gauge	1
5.	50382FW	Top Cover	1
6.	50382FZ	Quad Ring, for top cover	1
7.	SS4120915SP	Screw, for puller drive cover	4
8.	50382GB	Puller Drive Cover	1
9.	50382GC	Gasket, for puller drive cover	1
10.	50317C	Needle Bar Guard	1
11.	SS7120640SP	Screw, for needle bar guard	2
12.	50393HB	Plug, for bed	2
13.	TA1050504R0	Plug, for bed	1
14.	50382FX	Head Cover	1
15.	50382FY	Quad Ring, for head cover	1
16.	SS4121215SP	Screw, for head cover	4
17.	TA1100604R0	Plug, for head cover	1
18.	99682XCA	Needle Break Protection Shield Assembly	1
19.	14077	Nut	1
20.	99682XC1	Bracket	1
21.	99682XC2	Bracket	1
22.	99682XC	Protect Shield	1
23.	22766	Counter Sunk Head Screw	2
24.	95978	Spring Washer	1
25.	22758E	Shoulder Screw	1
26.	50393EW	Rubber Seal, for needle lever	1
27.	50382GA	Cover, for thread take-up	1
28.	SS4120915SP	Screw, for thread take-up cover	1
29.	SS4120615SP	Screw, for thread cover	1
30.	50382GM	Thread Cover	1
31.	SS4120615SP	Screw, for thread take-up cover	1
32.	LA452	Label, direction of rotation	1
33.	50393JV	Sponge, oil protector	1

From the library of: Superior Sewing Machine & Supply LLC

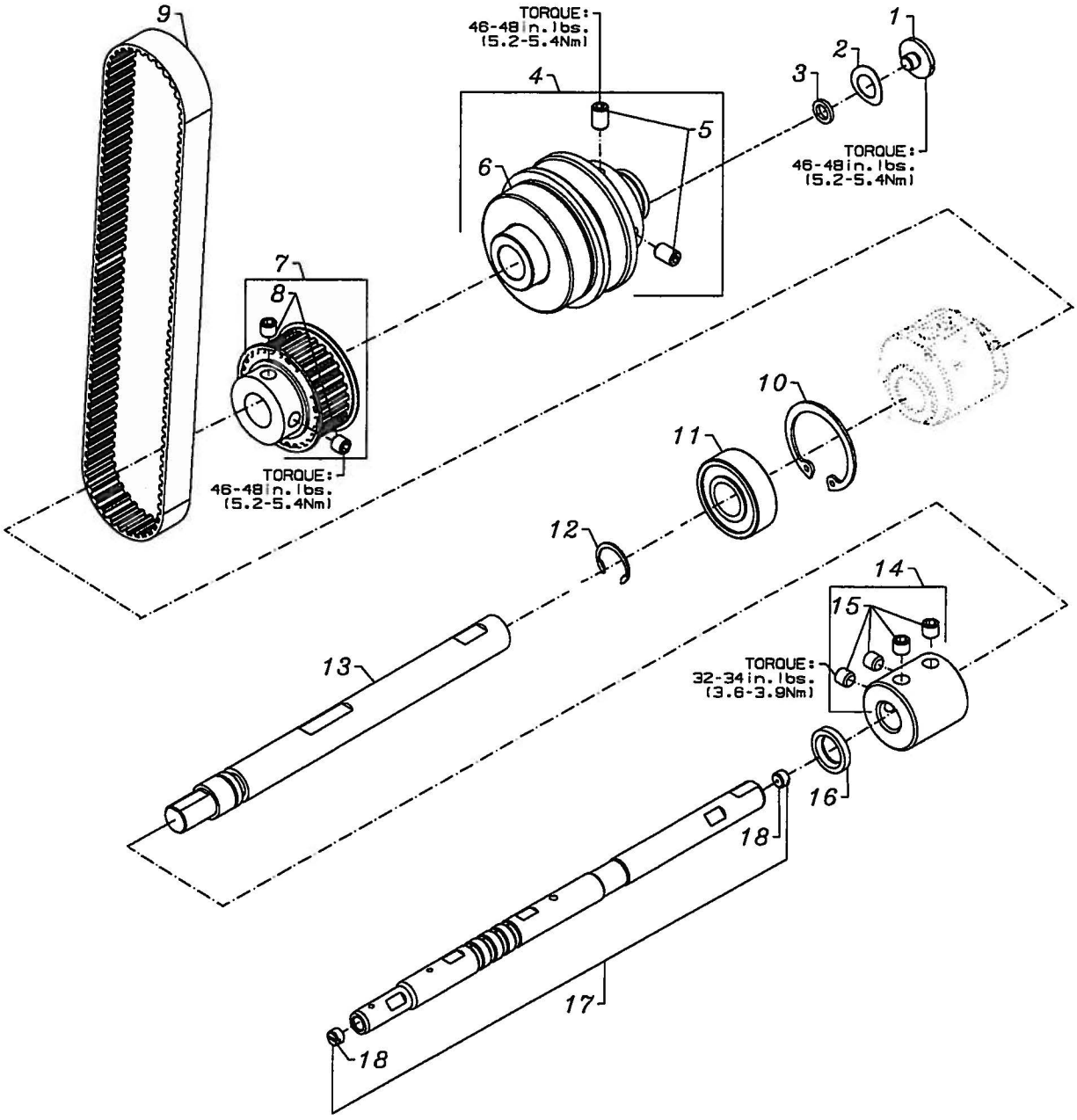

From the library of: Superior Sewing Machine & Supply LLC

LOWER MAIN SHAFT

Ref. No.	Part No.	Description	Amt. Req.
1.	SS7660520SP	Soulder Screw, for lower main shaft, right	1
2.	660-1062	Spring Washer	1
3.	50374	Spacer, for pulley assembly	1
4.	50321G	Pulley Assembly	1
5.	SS8661012TP	Set Screw	2
*6.		Ball Bearing, for lower main shaft	1
7.	50342AX	Sprocket, for lower main shaft	1
8.	SS8660612TP	Screw	2
9.	50342BS	Timing Belt	1
10.	50335AK	Retaining Ring, for ball bearing	1
11.	50322AL	Ball Bearing, for lower main shaft	1
12.	50335BB	Retaining Ring	1
13.	50322AG	Lower Main Shaft, right	1
14.	50333A	Coupling, for lower main shafts	1
15.	SS8660612TP	Screw	4
16.	660-934	Oil Seal	1
17.	50322AJ	Lower Main Shaft, left	1
18.	SS8660410SP	Screw	2

*NOTE: Not sold separately.

From the library of: Superior Sewing Machine & Supply LLC

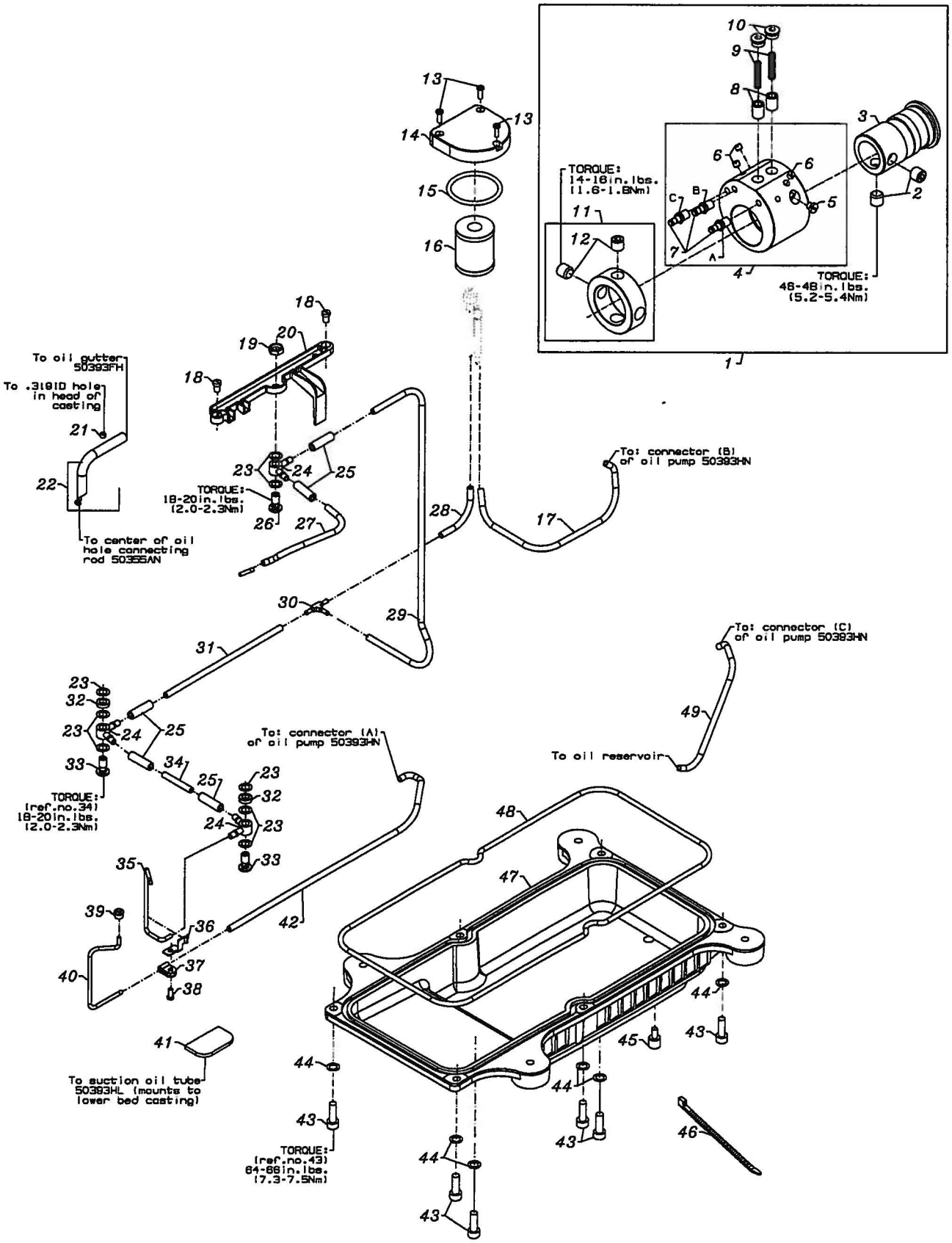

From the library of: Superior Sewing Machine & Supply LLC

Ref. No.	Part No.	Description	Amt. Req.
1.	50393HN	Oil Pump Assembly, 2-stage	1
2.	SS8660612TP	Screw	2
*3.		Oil Pump Bushing, 2-stage	1
*4.		Oil Pump Housing, 2 stage	1
*5.		Screw, for housing	1
*6.		Screw	3
*7.		Oil Connector	3
8.	34393D	Plunger	2
9.	50332S	Spring, for plunger	2
10.	18-1470	Screw, for plunger	2
*11.		Collar, for oil pump	1
12.	SS8660612TP	Screw	2
13.	SS4091015SP	Screw, for oil filter cover	3
14.	50393FR	Cover, for oil filter	1
15.	50384	"O" Ring, for oil filter cover	1
16.	11843208	Oil Filter	1
17.	50393FV	Oil Tube, for supply (1)	1
18.	SS7120710SP	Screw, for front upper tube	2
19.	258A	Nut	1
20.	50393FH	Oil Gutter	1
21.	SS8120410SP	Set Screw	1
22.	29476SB	Oil Tubing Assembly	1
23.	41350X	Washer, for dual feed connector	8
24.	C50094B	Connector Dual Feed	3
25.	50393GT	Oil Tube Cover	5
26.	50393HE	Plug Screw	1
27.	50393FK	Oil Tube, upper, front	1
28.	50393FW	Oil Tube, for supply (2)	1
29.	50393FX	Oil Tube, for supply (3)	1
30.	50393GU	"T" Connector	1
31.	50393FY	Oil Tube, for supply (4)	1
32.	50393HM	Collar	2
33.	22720B	Screw, for dual feed connector	2
34.	50393FZ	Oil Tube, for supply (5)	1
35.	50393GA	Oil Tube, for supply (7)	1
36.	50393FS	Oil Tube Holder	1
37.	998-358F	Plastic Clip	1
38.	SS4090815SP	Screw, for oil tube holder	1
39.	50393HR	Plug, for feed chamber	1
40.	50393HL	Oil Tube, for suction (1)	1
41.	50393HK	Felt	1
42.	50393HJ	Oil Tube, for suction (2)	1
43.	SS6151812TP	Screw, for oil pan	6
44.	WS0631510KP	Spring Washer	6
45.	22571E	Screw, for oil drain plug	1
46.	670E2	Plastic Lock Band	1
47.	50393EB	Oil Pan	1
48.	50384A	"O" Ring	1
49.	50393FT	Oil Tube, for suction	1

*NOTE: Not sold separately.

From the library of: Superior Sewing Machine & Supply LLC

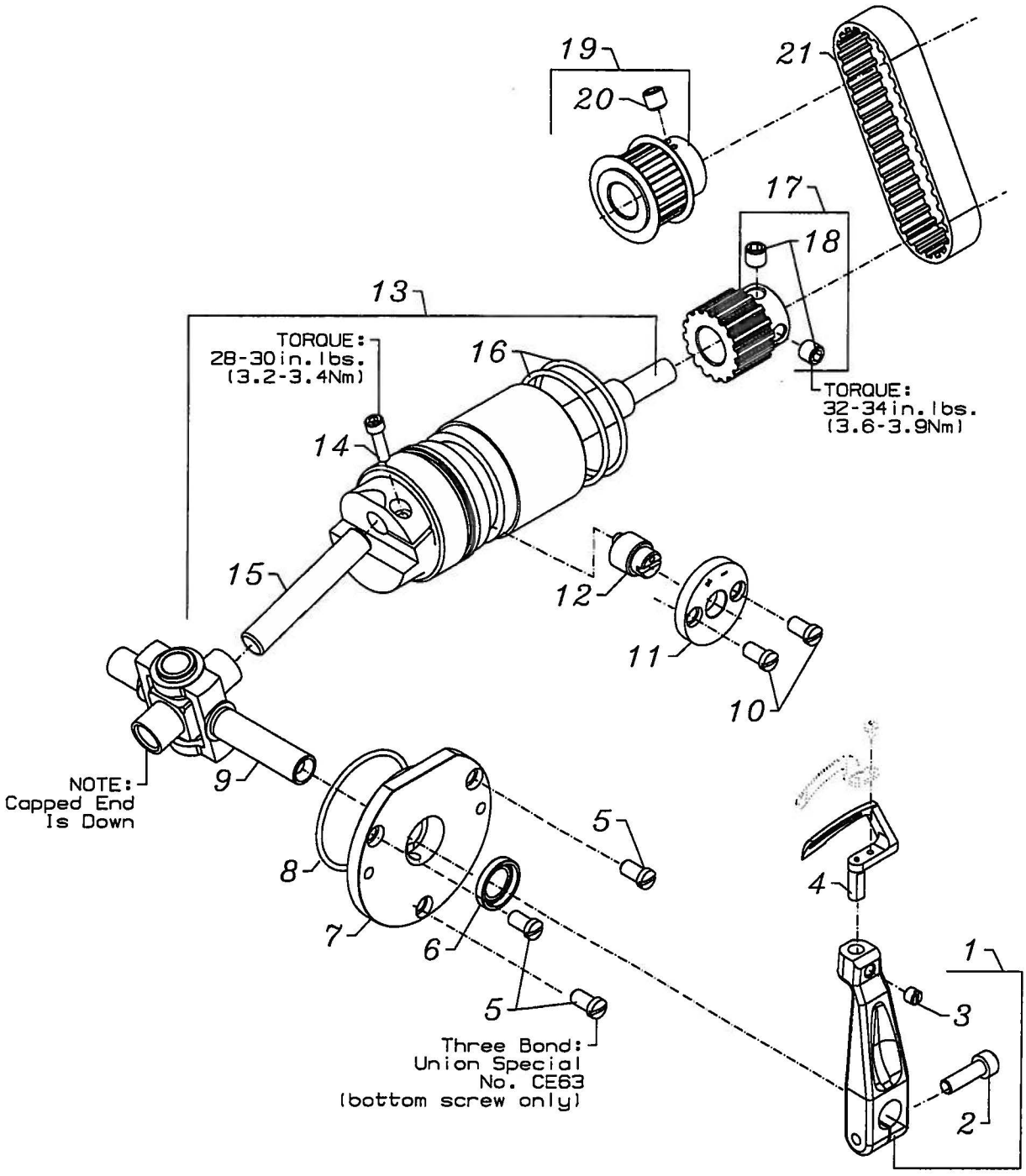

From the library of: Superior Sewing Machine & Supply LLC

LOOPER DRIVE

Ref. No.	Part No.	Description	Amt. Req.
1.	50313P	Looper Holder	1
2.	22652B10	Screw, for looper holder	1
3.	22565	Screw, for looper holder	1
4.	50309K	Looper	1
5.	SS7120910SP	Screw, for bearing housing	3
-	CE63	Three Bond Adhesive, (not shown), for screw	-
6.	660-893	Oil Seal, looper	1
7.	50344AM	Bearing Housing Assembly, for looper drive	1
8.	660-455	"O" Ring, for bearing housing assembly	1
9.	50313J	Looper Rocker Assembly	1
10.	SS7120910SP	Screw, for retaining plate	2
11.	50314F	Eccentric Retaining Plate	1
12.	50314E	Looper Avoid Adjusting Eccentric	1
13.	50313M	Looper Drive Assembly	1
14.	22653J8	Screw	1
15.	667J33	Crank Pin	1
16.	660-979	"O" Ring	2
17.	50342BJ	Sprocket, for looper driven	1
18.	SS8660612TP	Screw	2
19.	50342BK	Sprocket, for looper drive	1
20.	SS8660612TP	Screw	2
21.	50342BP	Looper Drive Belt	1

From the library of: Superior Sewing Machine & Supply LLC

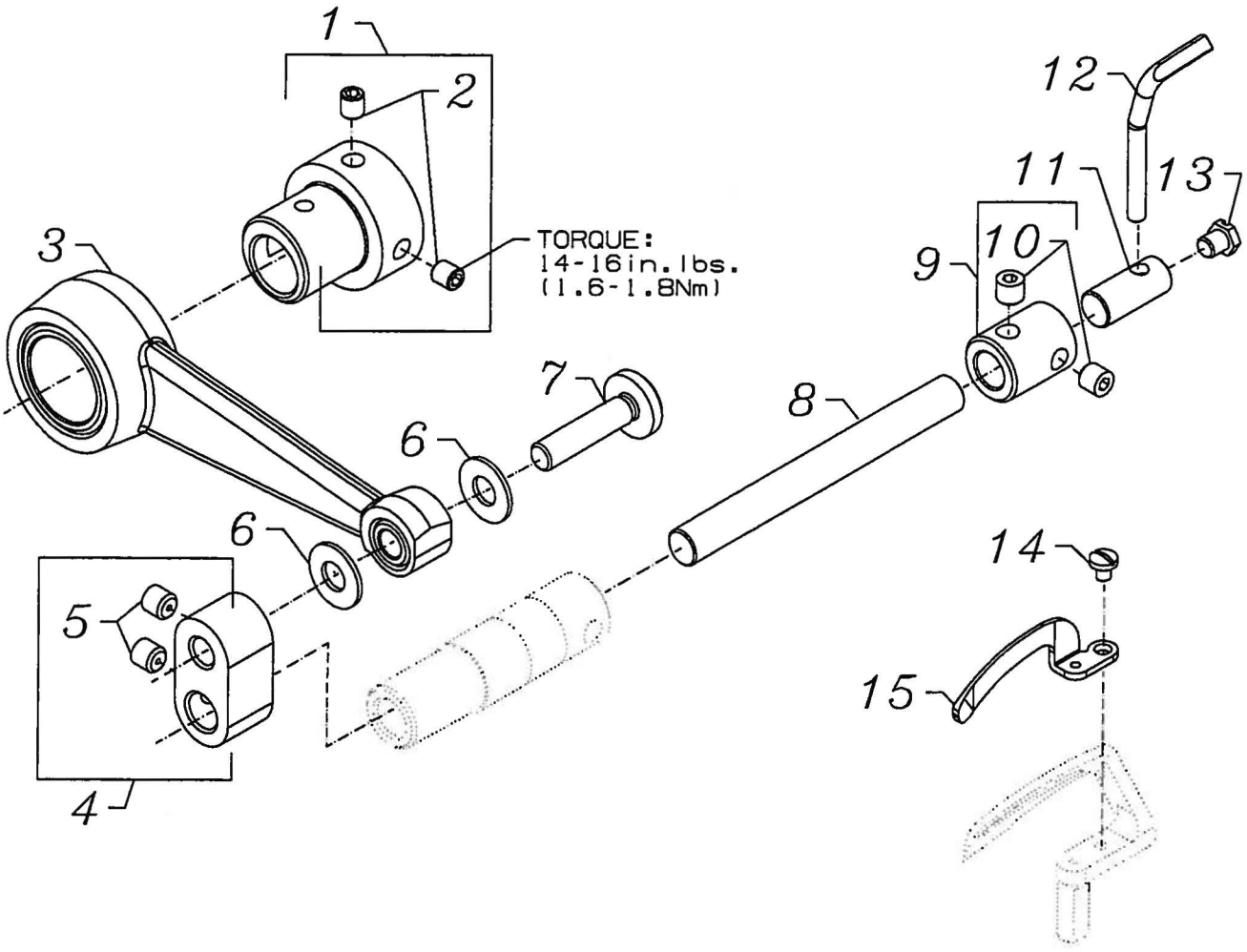

From the library of: Superior Sewing Machine & Supply LLC

NEEDLE GUARD

Ref. No.	Part No.	Description	Amt. Req.
1.	50373DA	Needle Guard Eccentric	1
2.	SS8110422TP	Screw, for needle guard eccentric	2
3.	50368W	Connecting Rod Assembly, for needle guard	1
4.	50368T	Pivot Link	1
5.	SS8110422TP	Screw	2
6.	50368E	Washer	2
7.	50368A	Pivot Pin	1
8.	50368V	Shaft, for needle guard	1
9.	50354L	Coupling, for needle guard	1
10.	SS8110422TP	Screw	2
11.	50325AF	Holder, for needle guard	1
12.	50325AE	Needle Guard, rear	1
13.	SS9090410TP	Screw, for rear needle guard	1
14.	SS7060310SP	Screw, for front needle guard	1
15.	50325AD	Needle Guard, front	1

From the library of: Superior Sewing Machine & Supply LLC

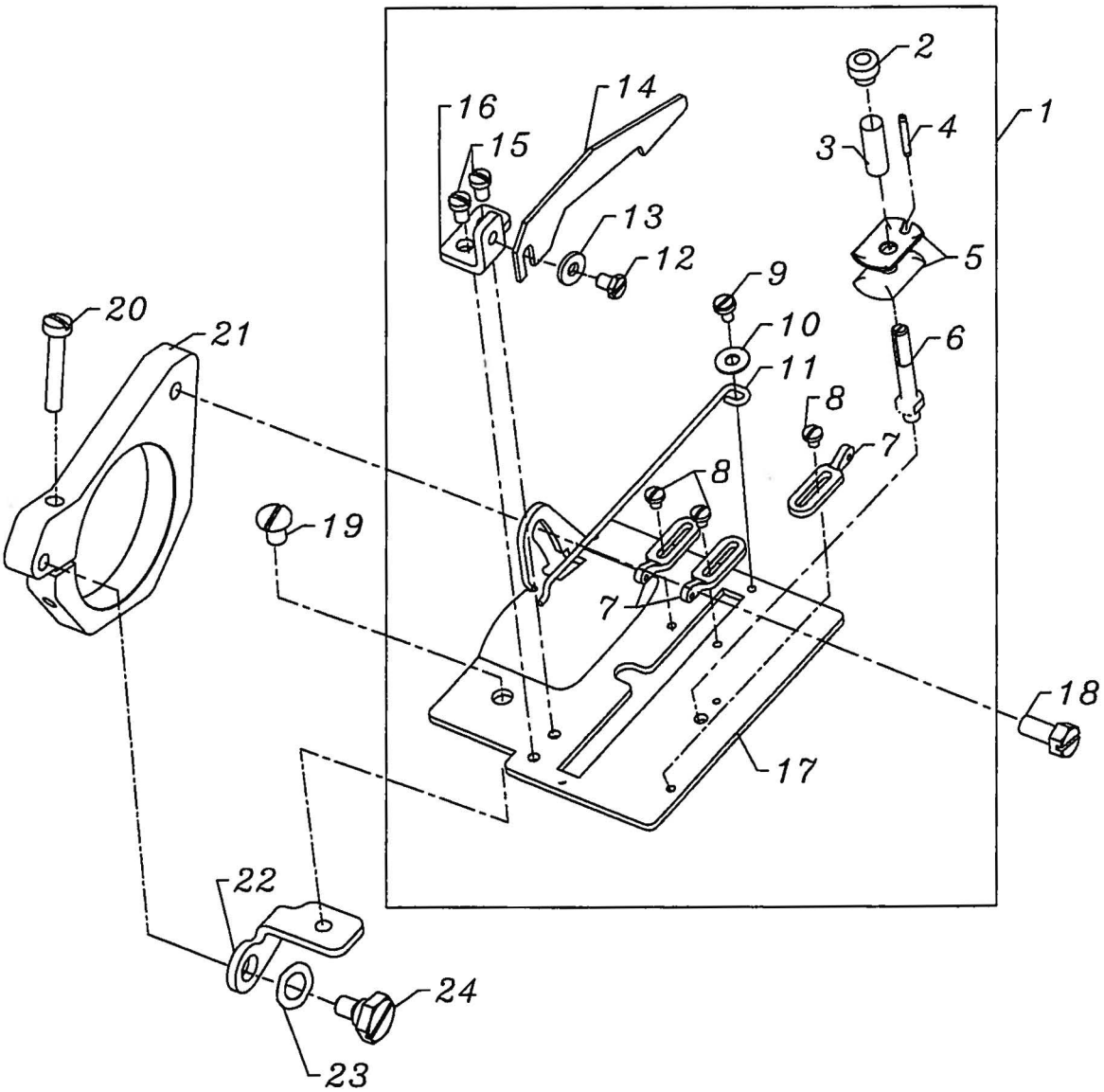

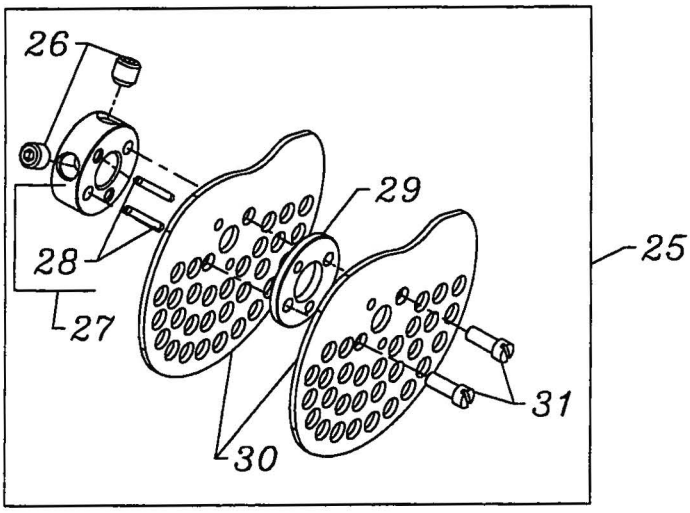

From the library of: Superior Sewing Machine & Supply LLC

LOOPER THREAD TAKE-UP

Ref. No.	Part No.	Description	Amt. Req.
1.	50357X	Cast-Off Plate Assembly	1
2.	51959D	Knurled Nut	1
3.	51959K	Tension Spring	1
4.	51959L	Roll Pin	1
5.	51959B	Tension Disc	2
6.	51492	Tension Post	1
7.	52958D	Take-up Eyelet	3
8.	SS7060310SP	Screw	3
9.	SS6060440TP	Screw	1
10.	WP0330501SP	Washer	1
11.	50304H	Strike-Off Wire	1
12.	SS9080410SP	Screw	1
13.	41358	Washer	1
14.	50304L	Retaining Finger	1
15.	SS7080520SP	Screw	2
16.	50383E	Mounting Bracket	1
17.	50357W	Cast-Off Plate	1
18.	SS9111010SP	Screw, for collar bracket	1
19.	SS6110610TP	Screw, for cast-off holder	1
20.	SS7092110TP	Screw, for collar bracket	1
21.	50383F	Take-Up Collar Bracket	1
22.	50304K	Cast-Off Plate Holder	1
23.	WZ0640200KP	Washer	1
24.	SD0630275SP	Shoulder Screw, for cast-off plate holder	1
25.	50323R	Take-Up Assembly	1
26.	22894C	Set Screw	2
27.	50323B	Take-up Hub	1
28.	22-348	Pin	2
29.	50377R	Spacer	1
30.	50323H	Disc, for take-up	2
31.	77B	Screw, for take-up disc	2

From the library of: Superior Sewing Machine & Supply LLC

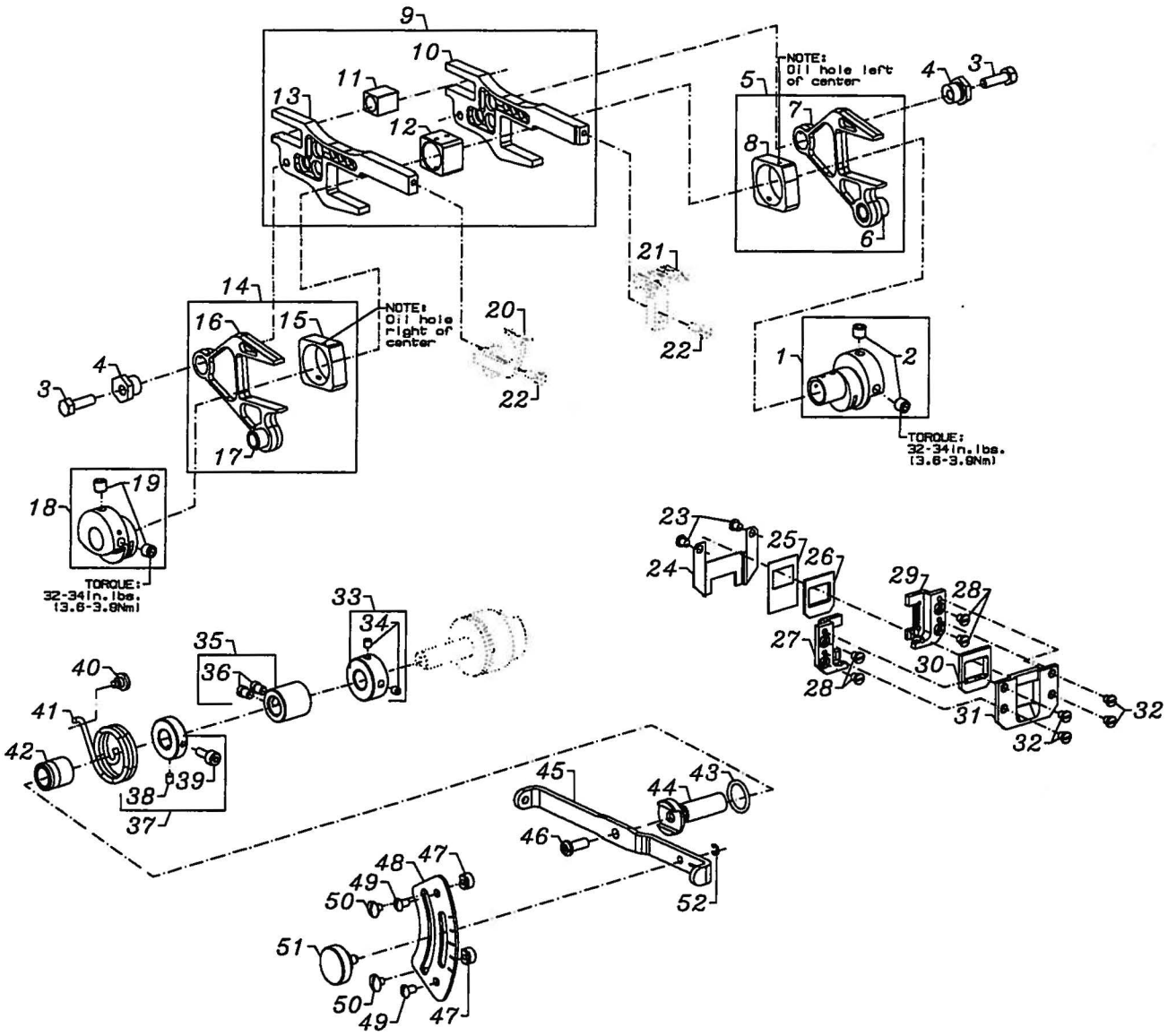

From the library of: Superior Sewing Machine & Supply LLC

FEED DRIVE MECHANISM

Ref. No.	Part No.	Description	Amt. Req.
1.	50340D	Feed Eccentric, main	1
2.	SS8660612TP	Screw, for feed drive fork screw	2
3.	18-1432	Screw	2
4.	50334BD	Hex Eccentric Stud	2
5.	50334AX	Drive Fork Assembly, right	1
6.	50336U	Link Pin	1
*7.		Fork	1
*8.		Feed Block, right	1
9.	50334BE	Feed Bar Assembly	1
*10.		Feed Bar, main	1
*11.		Slide Block	1
*12.		Stroke Block	1
*13.		Feed Bar, differential	1
14.	50334AW	Drive Fork Assembly, left	1
*15.		Feed Block, left	1
*16.		Fork	1
17.	50336U	Link Pin	1
18.	50340E	Feed Eccentric, differential	1
19.	SS8660612TP	Screw	2
20.	------	Feed Dog, differential (see page 43)	1
21.	------	Feed Dog, main (see page 43)	1
22.	------	Screw, for feed dogs (see page 43)	2
23.	SS7090530SP	Screw, for oil shield	2
24.	50334Y	Oil Shield	1
25.	50334V	Oil Scraper, front	1
26.	50334BH	Feed Bar Seal	1
27.	50335AM	Guide Plate, left, rear	1
28.	SS7090530SP	Screw, for guide plate, left rear	4
29.	50335BA	Guide Plate, right, rear	1
30.	50334BJ	Feed Bar Seal	1
31.	50335AN	Guide Plate, front	1
32.	SS7090530SP	Screw, for guide plate, right, rear	4
33.	50337S	Collar	1
34.	SS8110422TP	Screw	2
35.	50337L	Coupling, for differential feed lever	1
36.	SS6110650TP	Screw	2
37.	50337R	Collar, for differential feed lever	1
38.	SS8090740SP	Screw	1
39.	SS6091022TP	Screw	1
40.	SD0550271TP	Screw, for spring	1
41.	50337M	Spring, for differential feed lever	1
42.	50337N	Bushing, differential feed lever	1
43.	RO068190100	"O" Ring	1
44.	50337J	Stem, for differential feed lever	1
45.	50337H	Differential Feed Lever	1
46.	SS4121215SP	Screw, for stem	1
47.	50337U	Stop	2
48.	50337K	Plate, for differential feed lever	1
49.	SS5090610SP	Screw, for plate	2
50.	SS3090530SP	Screw, for stop	2
51.	50337P	Knob, for differential feed lever	1
52.	RE0250000KO	"E" Ring	1

*NOTE: Not sold separately.

From the library of: Superior Sewing Machine & Supply LLC

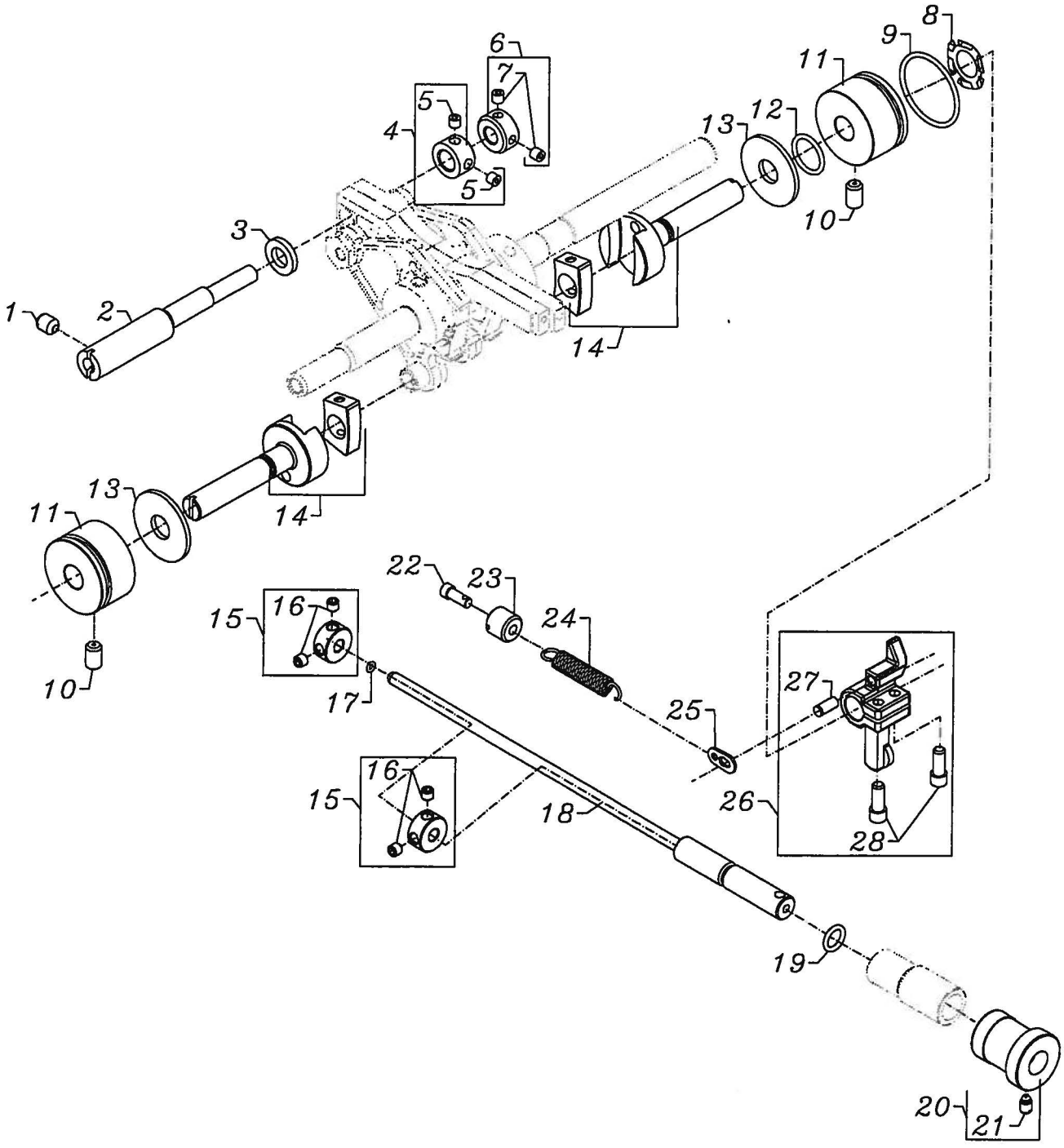

From the library of: Superior Sewing Machine & Supply LLC

FEED DRIVE MECHANISM

Ref. No.	Part No.	Description	Amt. Req.
1.	22591A	Screw, for eccentric shaft	1
2.	50334BC	Eccentric Shaft	1
3.	50368AD	Washer, for eccentric shaft	1
4.	50334BB	Collar	1
5.	SS8110422TP	Screw	2
6.	50337T	Collar, for eccentric shaft	1
7.	SS8110422TP	Screw	2
8.	661-96	Spring Washer	1
9.	660-969	"O" Ring, for bushing	1
10.	SS8661012TP	Screw	2
11.	35036F	Bushing, for stitch adjusting shaft	2
12.	660-220	"O" Ring, for stitch adjusting shaft	1
13.	35036AZ	Brake Pad	2
14.	50379S	Stitch Adjusting Shaft Assembly	2
15.	50335D	Collar	2
16.	22894P	Screw	4
17.	660-980	"O" Ring, stitch control shaft	1
18.	50335E	Shaft, for stitch control	1
19.	660-206	Washer, for stitch control shaft	1
20.	35036AP	Stitch Knob, indicator	1
21.	22764A	Screw	1
22.	50335	Spring Retainer	1
23.	22714C	Screw, for spring retainer	1
24.	50355	Spring	1
25.	50335A	Spring Holder	1
26.	50336S	Stitch Control Lever	1
27.	661-35	Pin	1
28.	22596H	Screw	2

From the library of: Superior Sewing Machine & Supply LLC

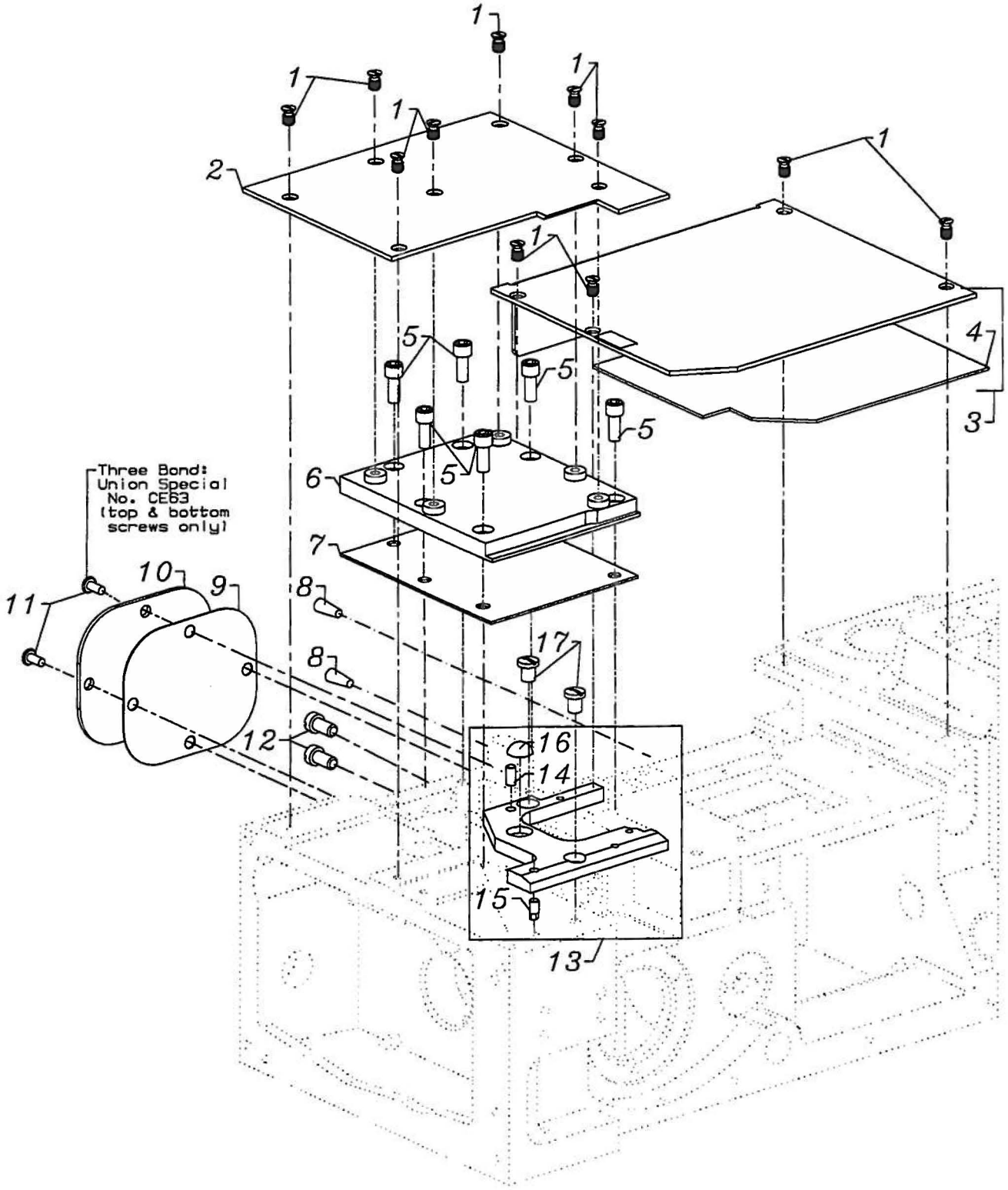

From the library of: Superior Sewing Machine & Supply LLC

COVERS, LOWER BED

Ref. No.	Part No.	Description	Amt. Req.
1.	18-1448	Screw	11
2.	50301BH	Cloth Plate, left	1
3.	50301BF	Cloth Plate, right	1
4.	50303B	Acoustic Pad	1
5.	SS6121212TP	Screw, swing plate	6
6.	50382CP	Cover, for feed chamber	1
7.	50382CS	Gasket	1
8.	C067D	Cork	2
9.	50382CR	Gasket	1
10.	50382CL	Cover, for feed chamber, rear	1
11.	SS4120615SP	Screw, for cover	4
-	CE63	Three Bond Adhesive, (not shown), for screw	-
12.	22517	Screw, for bed	2
13.	50380KA	Throat Plate Support, complete	1
14.	50336W	Dowel Pin	2
15.	50328	Diamond Pin	1
16.	660-939	Rubber Bumper, for throat plate support	1
17.	SS7150740SP	Screw	2

From the library of: Superior Sewing Machine & Supply LLC

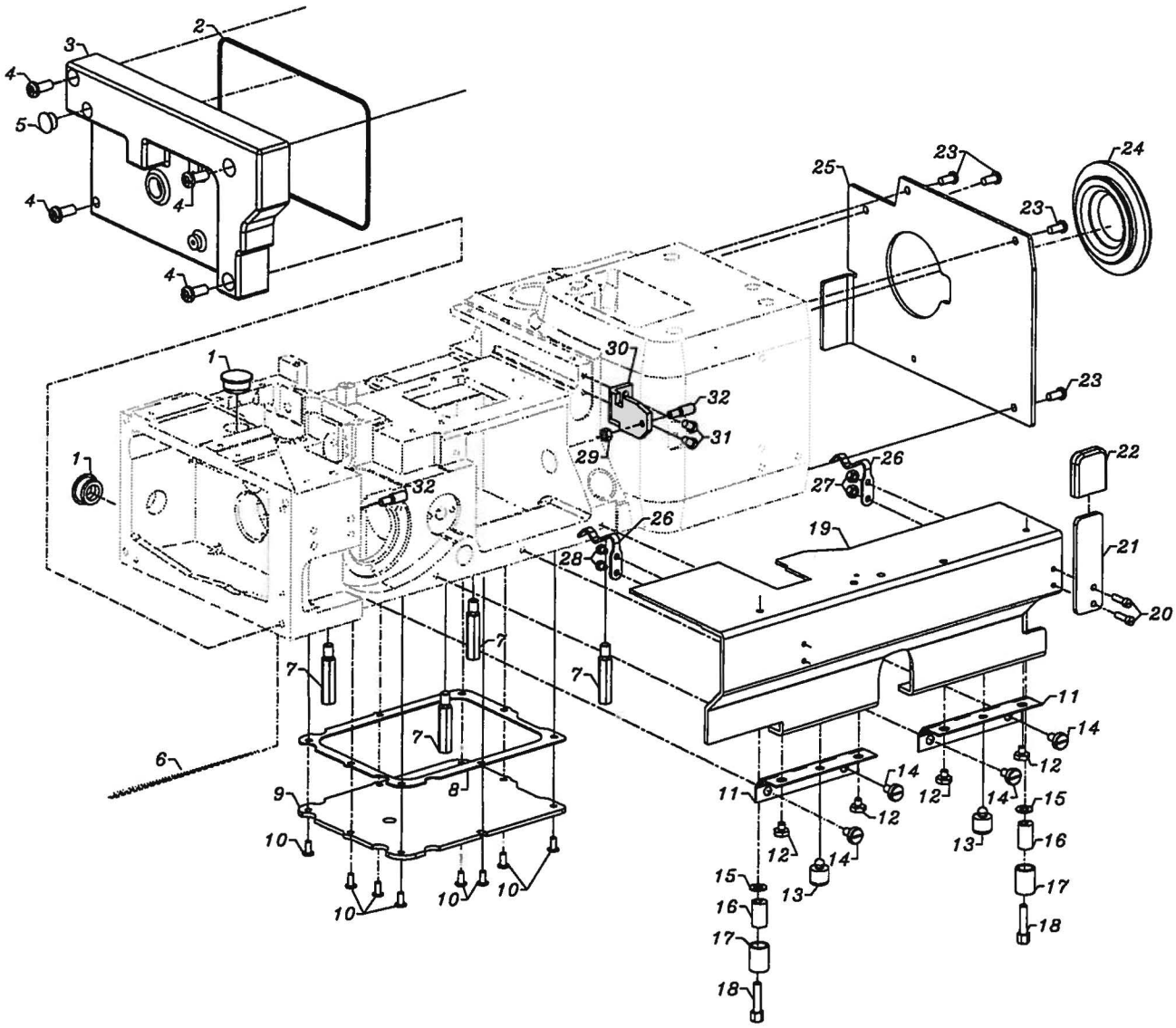

From the library of: Superior Sewing Machine & Supply LLC

COVERS, LOWER BED

Ref. No.	Part No.	Description	Amt. Req.
1.	50393HB	Plug	2
2.	50382CM	Quad Ring	1
3.	50382CH	Left End Cover	1
4.	SS4151415SP	Screw	4
5.	50393HA	Plug	1
6.	WO3	Oil Wick	1
7.	22841U	Machine Support Stud	4
8.	50383G	Gasket	1
9.	50382CG	Dry Chamber Cover	1
10.	SS7090850SP	Screw	8
11.	50378S	Hinge	2
12.	SS9110543CP	Screw	4
13.	660-1020	Rubber Bumper	2
14.	SS6120930TP	Screw	4
15.	20	Washer	2
16.	50382T	Stop, for front cover	2
17.	50393W	Rubber Bumper	2
18.	22519J	Screw	2
19.	50382CK	Swing Down Cover	1
20.	22729D	Screw	2
21.	50363CH	Lever	1
22.	50382GT	Handle Cap	1
23.	SS4121015SP	Screw	4
24.	50393HU	Plug	1
25.	50382CJ	Cover, for drive belt	1
26.	50332A	Latch Spring	2
27.	39250J	Nut	2
28.	22513D	Screw	2
29.	35569J	Nut	1
30.	50332B	Support Block	1
31.	SS7120710SP	Screw	2
32.	22799AH	Spring Latch Stud	2

From the library of: Superior Sewing Machine & Supply LLC

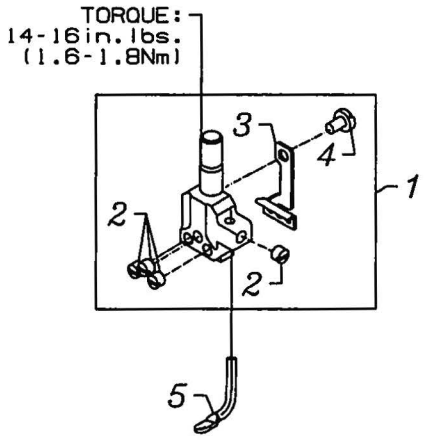

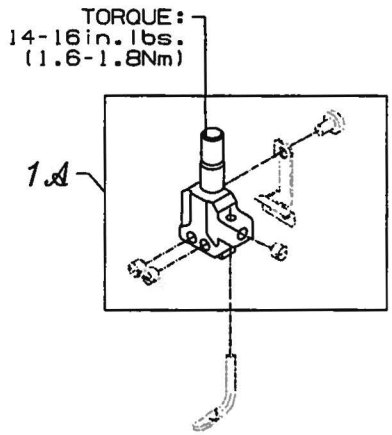

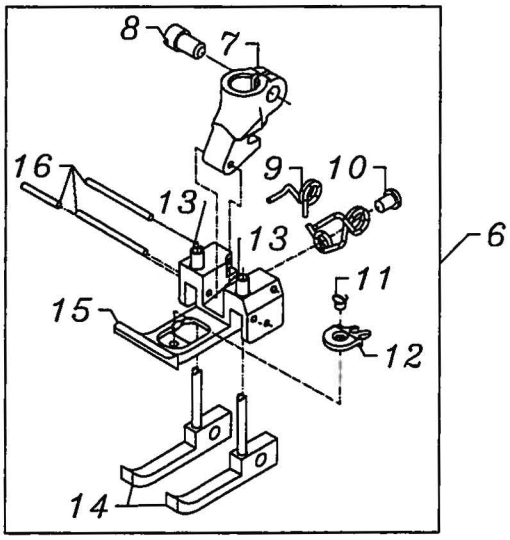

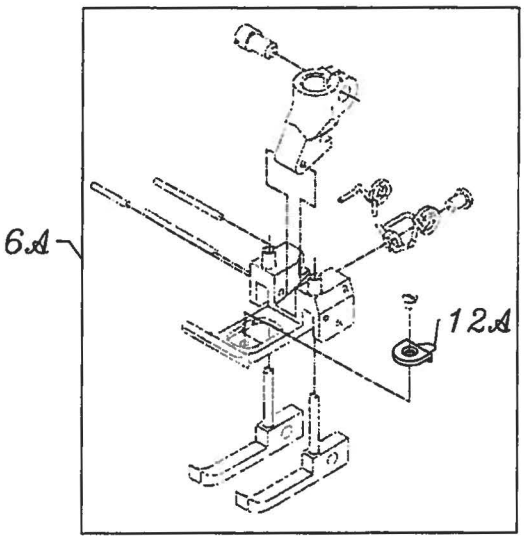

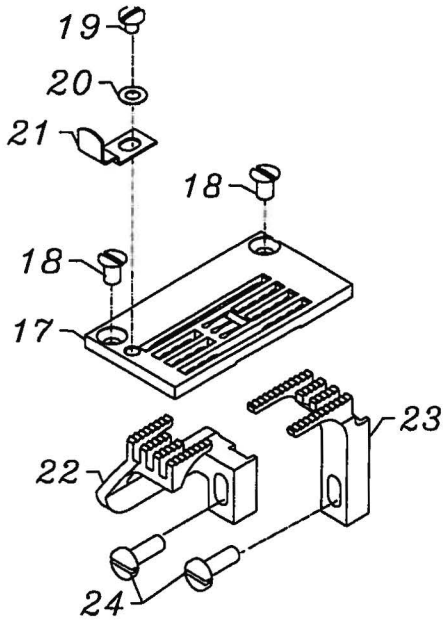

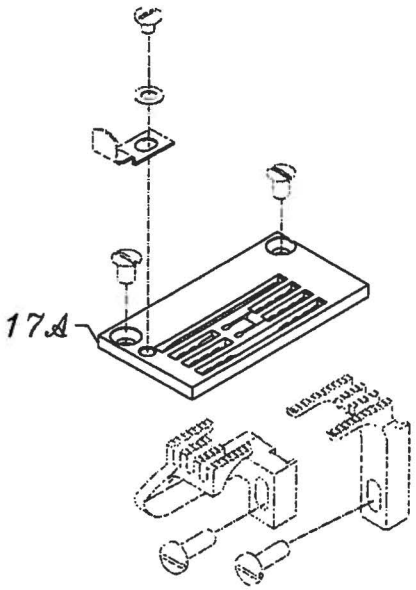

From the library of: Superior Sewing Machine & Supply LLC

SEWING PARTS

Ref. No.	Part No.	Description	Amt. Req.
1.	50318Y60	Needle Head, for Style FS332L01-3B_ _, .060 gauge	1
-	50318AA56	Needle Head, for Style FS332L01-3B_ _, .056 gauge	1
1A.	50318Z40	Needle Head, for Style FS332L01-2C_ _, .040 gauge	1
2.	SS8080310TP	Screw	3 or 4
3.	50318AE56	Eyelet	1
4.	SS6060440TP	Screw	1
5.	50392G	Needle Thread Eyelet	1
6.	50320T60	Presser Foot, for Style FS332L01-3B_ _, .056 and .060 gauge	1
6A.	50320AT	Presser Foot, for Style FS332L01-2C_ _, .040 gauge	1
7.	G65-134	Shank	1
8.	91	Screw	1
9.	79633	Spring	1
10.	605	Screw	1
11.	22716A	Screw	1
12.	50397A16	Stitch Tongue, for Style FS332L01-3B_ _, .056 and .060 gauge	1
12A.	50397G	Stitch Tongue, for Style FS332L01-2C_ _, .040 gauge	1
13.	G50-266	Bushing	2
14.	57830A	Yielding Section	2
15.	50330BL16	Presser Foot Bottom	1
16.	6-25-55	Drill Rod	3
17.	50324BR60	Throat Plate, for Style FS332L01-3B_ _, .060 gauge	1
-	50324BR56	Throat Plate, for Style FS332L01-3B_ _, .056 gauge	1
17A.	50324BJ40	Throat Plate, for Style FS332L01-2C_ _, .040 gauge	1
18.	87	Screw, for throat plate	2
19.	22561	Screw, for guide	1
20.	27-435BLK	Washer, for screw	1
21.	23195	Guide	1
22.	50326AE	Differential Feed Dog	1
23.	50305AN	Main Feed Dog	1
24.	SS7091110TP	Screw, for feed dogs	2

From the library of: Superior Sewing Machine & Supply LLC

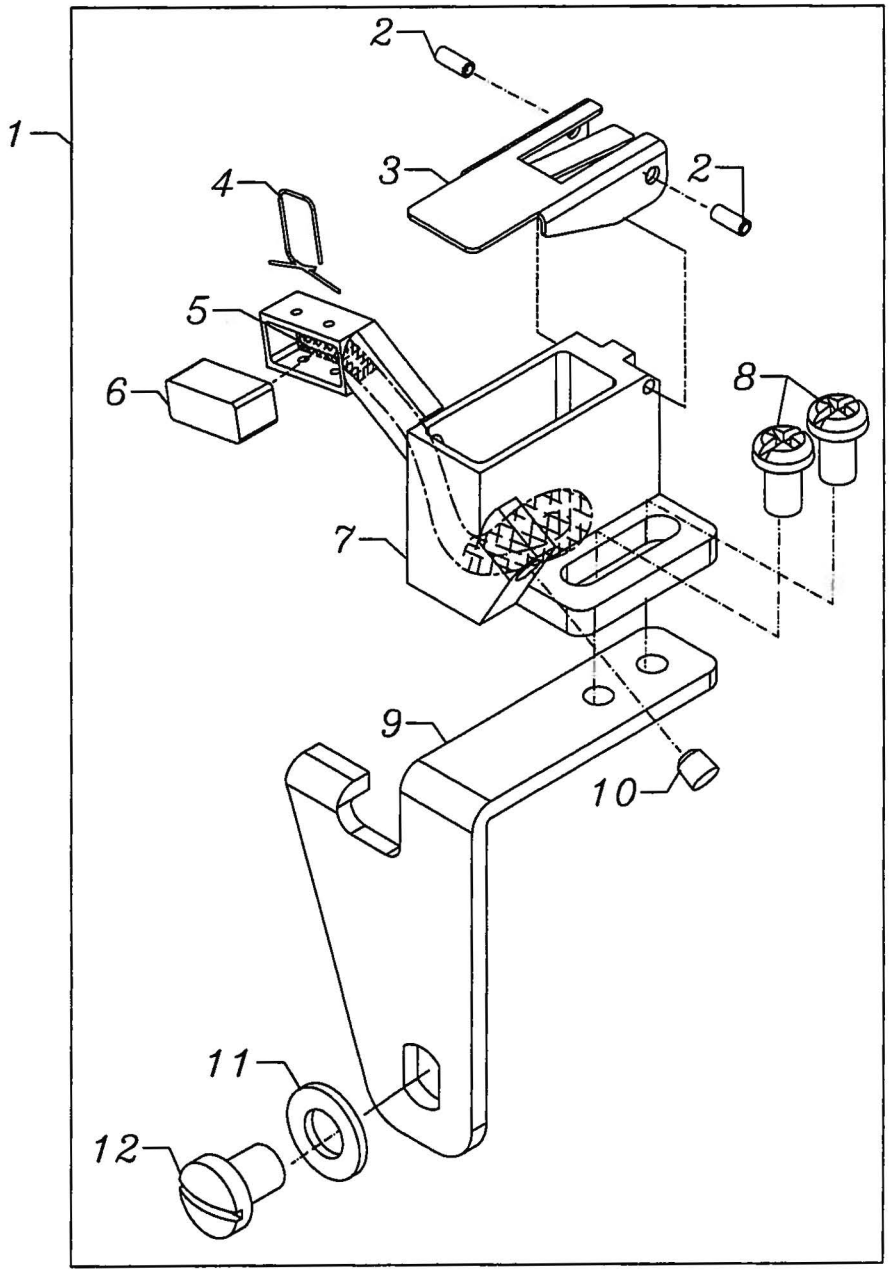

From the library of: Superior Sewing Machine & Supply LLC

NEEDLE DIPPER (EXTRA SEND CHARGE)

Ref. No.	Part No.	Description	Amt. Req.
1.	29476RZ	Needle Dipper Assembly	1
2.	PS0160042KH	Roll Pin	2
3.	50393JD	Needle Dipper Cover	1
4.	50393GS	Wire, for needle dipper	1
5.	CQ202000000	Oil Wick, for needle dipper	1
6.	50393GK	Felt, for needle dipper	1
7.	50393JC	Needle Dipper	1
8.	SS4090615SP	Screw, for needle dipper	2
9.	50393GP	Silicone Oil Tank Holder	1
10.	50393GG	Plug	1
11.	WP0531000SD	Washer	1
12.	SS4120615SP	Screw, for needle dipper holder	1

From the library of: Superior Sewing Machine & Supply LLC

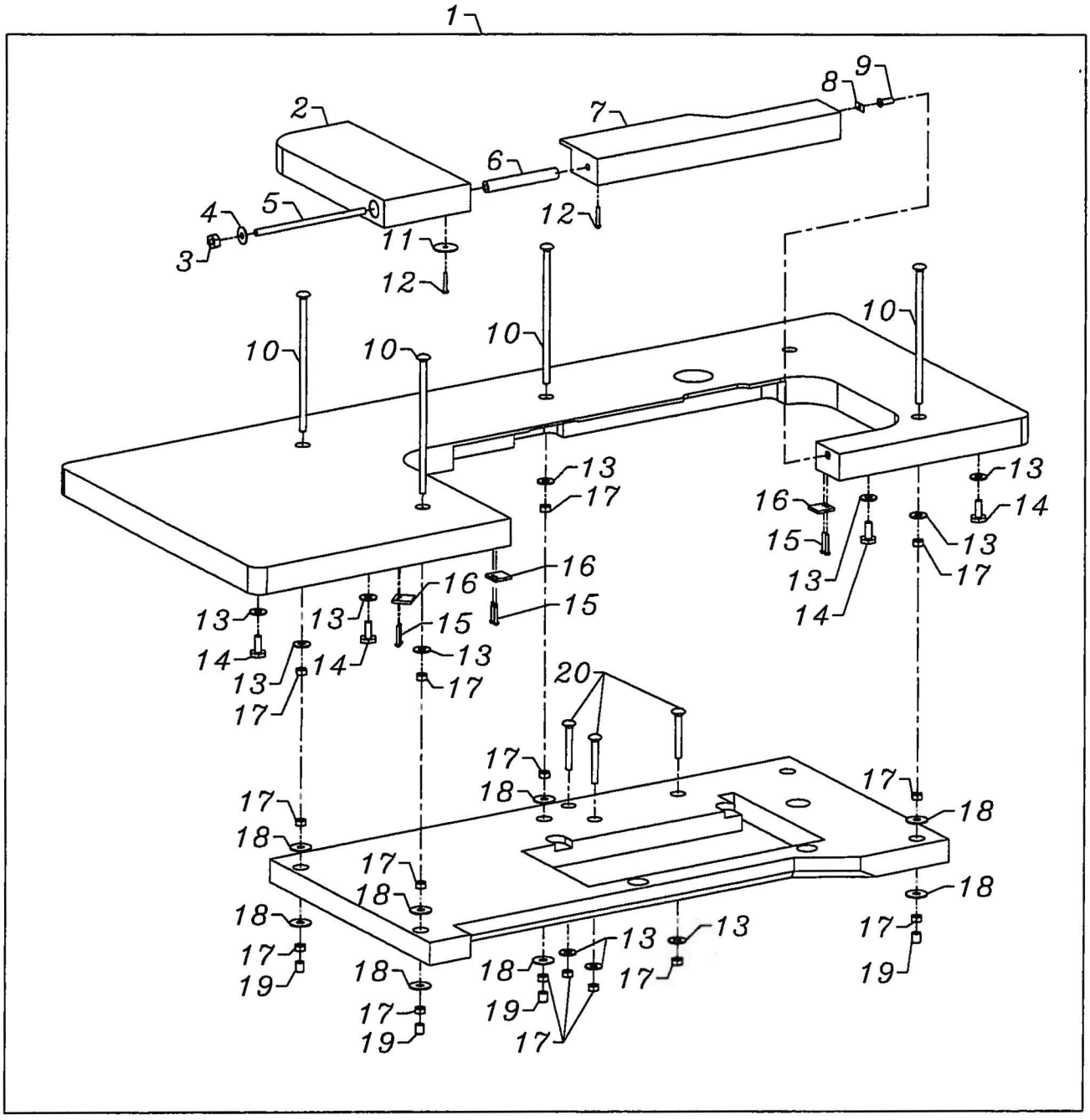

From the library of: Superior Sewing Machine & Supply LLC

TABLING (EXTRA SEND CHARGE)

Ref. No.	Part No.	Description	Amt. Req.
1.	21371AAE48	Table Board	1
2.	---	Insert	1
3.	---	Nut	1
4.	---	Washer	1
5.	---	Plastic Tube	1
6.	---	Threaded Rod	1
7.	---	Insert	1
8.	---	Keeper Plate	1
9.	---	Latch	1
10.	---	Bolt	4
11.	---	Washer	5
12.	---	Screw	2
13.	---	Washer	11
14.	---	Hex Bolt	4
15.	---	Screw	4
16.	---	Stop	3
17.	---	Sems Nut	15
18.	---	Washer	8
19.	---	Plastic Bolt Cap	4
20.	---	Bolt	3

From the library of: Superior Sewing Machine & Supply LLC

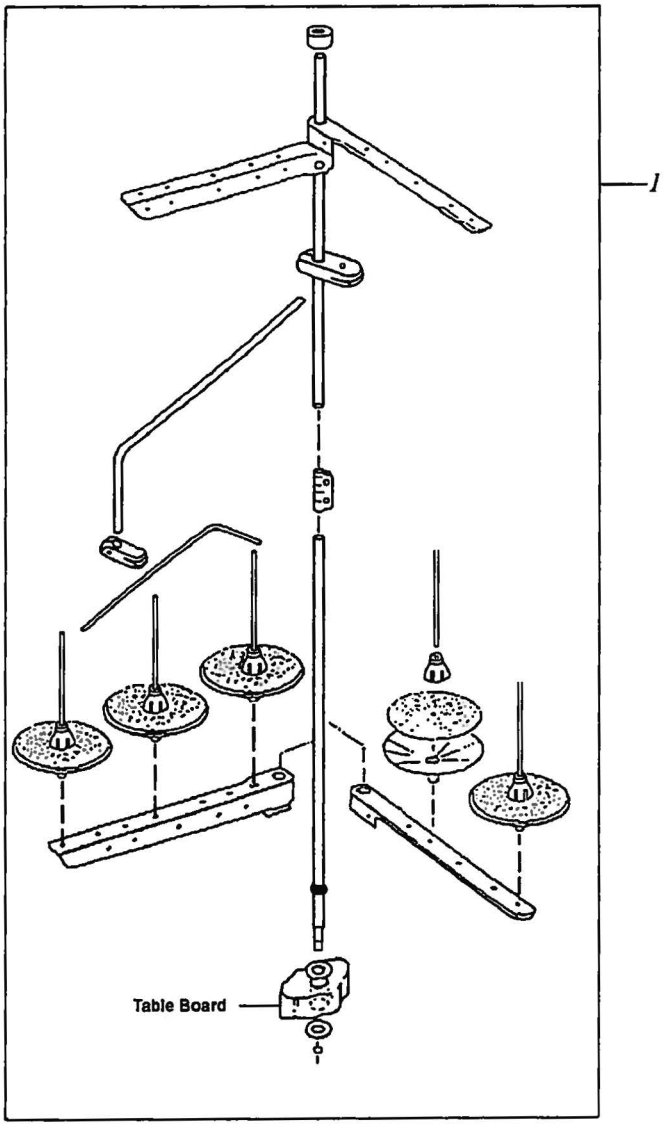

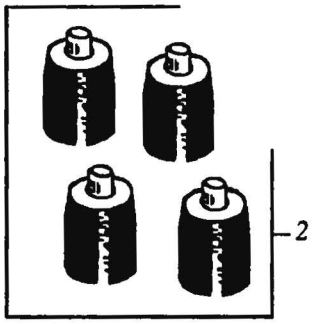

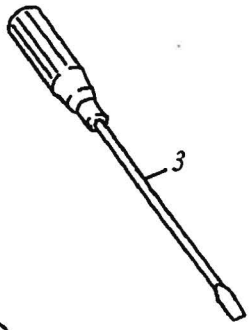

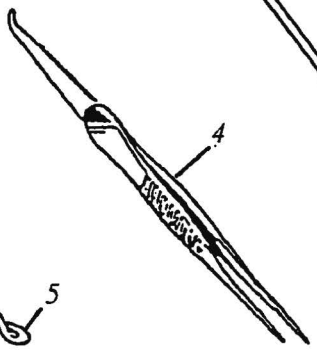

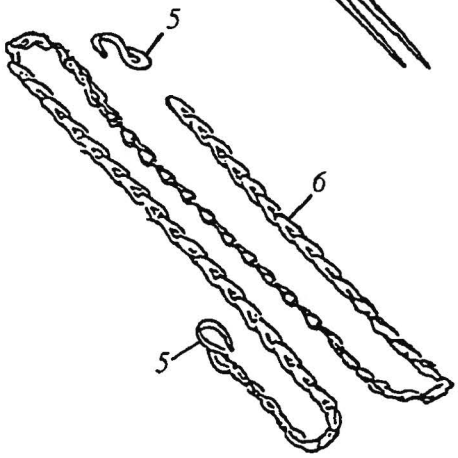

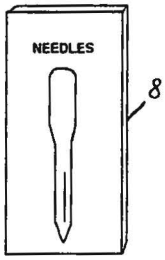

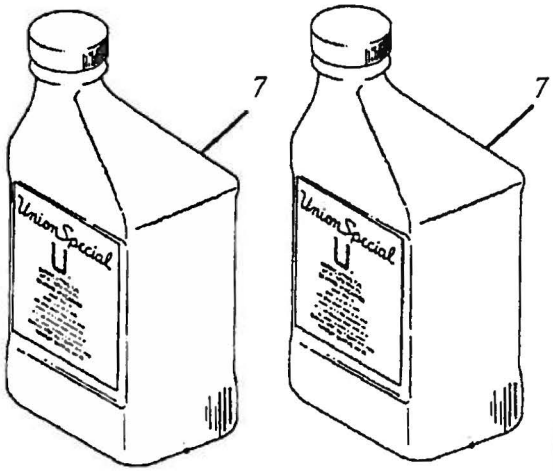

P371-95

From the library of: Superior Sewing Machine & Supply LLC

ACCESSORIES

Ref. No.	Part No.	Description	Amt. Req.
1.	21101W5	Thread Stand	1
2.	35095B	Isolator	4
3.	G21201	Screw Driver, for needle head	1
4.	660-240	Thread Tweezer	1
5.	660-264	S-Hook	2
6.	421D34	Chain	1
7.	28604R	Oil, (1 pint)	2
8.	128GBS 075/029	Needles, (package of 10)	1

From the library of: Superior Sewing Machine & Supply LLC

NUMERICAL INDEX OF PARTS

Part No.	Page No.
11071602	21
11071701	21
11843208	27
12124202	17
128GBS075/029	49
14077	23
18-1432	35
18-1448	39
18-1470	27
20	41
21101W5	49
21371AAE48	47
21657Y	19
22-348	33
22513D	41
22517	39
22519J	41
22561	43
22562	21
22565	29
22571E	27
22571L	9
22591A	37
22596	19
22596H	37
22652B10	29
22653J8	29
22714C	37
22716A	43
22720B	27
22729D	41
22758E	23
22764A	37
22766	23
22799AH	41
22841U	41
22894C	33
22894P	37
23195	43
258A	27
27-435BLK	43
28604R	49
28604X	15
29126FL	15
29475CG	17
29476RZ	45
29476SB	27
34393D	27
35036AB	9
35036AP	37
35036AZ	37
35036F	37
35095B	49
35569J	41
36271A	17
39250J	41
402	19
41350X	27
41358	33
421D34	49
50301BF	39
50301BH	39
50303B	39
50304H	33
50304K	33
50304L	33
50305AN	43
50309K	29
50313J	29
50313M	29
50313P	29
50314E	29
50314F	29
50317B	11
50317C	23
50318AA56	43
50318AE56	43
50318Z40	43
50320AT	43
50320T60	43
503218Y60	43
50321F	13
50321G	25
50322AF	13
50322AG	25
50322AJ	25
50322AL	25
50323B	33
50323H	33
50323P	11
50323R	33
50324BJ40	43
50324BR56	43
50324BR60	43
50325AD	31
50325AE	31
50325AF	31
50326AE	43
50328	39
50330BL16	43
50330CZ	9
50332A	41
50332B	41
50332S	27
50332U	9
50332V	21
50333A	25
50334AW	35
50334AX	35
50334BB	37
50334BC	37
50334BD	35
50334BE	35
50334BH	35
50334BJ	35
50334V	35
50334Y	35
50335	37
50335A	37
50335AF	21
50335AG	21
50335AH	21
50335AK	25
50335AM	35
50335AN	35
50335AV	15
50335AW	15
50335BA	35
50335BB	25
50335BD	13
50335D	37
50335E	37
50336S	37
50336U	35
50336W	39
50337H	35
50337J	35
50337K	35
50337L	35
50337M	35
50337N	35
50337P	35
50337R	35
50337S	35
50337T	37
50337U	35
50340D	35
50340E	35
50342AX	25
50342BE	13
50342BJ	29
50342BK	29
50342BP	29
50342BS	25
50344AH	9
50344AJ	9
50344AM	29
50344E	9
50346	17
50346A	15
50347C	15
50347E	9
50347F	9
50347G	15
50347J	15
50347K	15
50347L	9
50351A	11
50352	11
50354F	11
50354G	11
50354H	9
50354J	9
50354L	31
50355	37
50355AM	11
50355AN	11
50355AR	21
50357AA	21
50357AD	17
50357V	17
50357W	33
50357X	33
50357Y	17
50358U	17
50358V	17
50358W	17
50358X	11
50360	15
50360B	15
50360C	15
50360D	15
50360E	15
50362	15
50363CH	41
50363CJ	17
50366	17
50366A	17
50366B	17
50368A	31
50368AB	9
50368AD	37
50368E	31
50368T	31
50368V	31
50368W	31
50370F	17
50373DA	31
50374	25
50377R	33
50378S	41
50379S	37
50380KA	39
50381	21
50381B	21
50381E	9
50381F	21
50381G	21
50382CG	41
50382CH	41
50382CJ	41
50382CK	41
50382CL	39
50382CM	41
50382CP	39
50382CR	39
50382CS	39
50382FW	23
50382FX	23
50382FY	23
50382FZ	23
50382GA	23
50382GB	23
50382GC	23
50382GM	23
50382GT	41
50382T	41
50383E	33
50383F	33
50383G	41
50383L	11
50383M	11
50384	27
50384A	27
50391	13
50392AB	9
50392AE	17
50392AU	17
50392AV	19
50392AW	17
50392AX	17
50392AY	17
50392AZ	17
50392BA	17
50392G	43
50392S	17
50392T	17
50392V	17
50392W	19
50392X	19
50392Y	19
50392Z	19
50393EB	27
50393ET	9
50393EU	23
50393EW	23
50393EY	9
50393FH	27
50393FK	27
50393FL	9
50393FR	27
50393FS	27
50393FT	27
50393FU	9
50393FV	27
50393FW	27
50393FX	27
50393FY	27
50393FZ	27
50393GA	27
50393GE	9
50393GG	45
50393GK	45
50393GP	45
50393GS	45
50393GT	27
50393GU	27
50393HA	41
50393HB	23, 41
50393HE	27
50393HH	17
50393HJ	27
50393HK	27
50393HL	27
50393HM	27
50393HN	27
50393HR	27
50393HS	11
50393HU	41
50393HW	11
50393JC	45
50393JD	45
50393JP	11
50393JV	23
50393W	41
50394AF	11
50397A16	43
50397G	43
51492	33
51959B	33

From the library of: Superior Sewing Machine & Supply LLC

NUMERICAL INDEX OF PARTS

Part No.	Page No.
51959D	33
51959K	33
51959L	33
52888B	21
52958D	33
53678N	15
56392G	19
56392H	19
56392L	19
56392M	19
56392R	19
57830A	43
57844	17
57865	19
57892K	19
6-25-55	43
605	43
605A	17
61351C	15
652C16	17
660-1020	41
660-1043	13
660-1062	25
660-206	37
660-220	37
660-240	49
660-264	49
660-283A	19
660-455	29
660-739	15, 21
660-893	29
660-934	25
660-939	39
660-969	37
660-979	29
660-980	11, 37
661-259B	11
661-261	13
661-262	13
661-35	37
661-96	37
667J33	29
670E2	27
77B	33
79633	43
87	43
91	43
95978	23
96162B	15
99682XC	23
99682XC1	23
99682XC2	23
99682XCA	23
998-358F	27
B1135850000	17
B2531704000	15
B3101804000	19
B3103804000	19
B3112704000	19
B3120352000	19
B3120704000	19
B3121804000	19
B3126012000	19
B3530555000	23
C067D	39
C50044E	17
C50056B	21
C50094B	27
CE27	11
CE49	21
CE59	11
CE63	11, 29
CE63	39
CQ202000000	45
G21201	49
G50-266	43
G65-134	43
GR15	15
LA452	23
NS6110420SP	19
NS6110530SP	15
NS6150310SP	21
PS0160042KH	45
PS0400142KH	9
RE0250000KO	35
RE0500000KO	21
RO068190100	21, 35
RO195240100	23
SD0380551SL	17
SD0550271TP	35
SD0630275SP	33
SD0641103TP	15
SD0790303SP	21
SS1121010SP	17
SS3090530SP	35
SS4080620TP	11
SS4090615SP	45
SS4090815SP	17, 27
SS4091015SP	27
SS4120615SP	17
SS4120615SP	19, 23
SS4120615SP	39, 45
SS4120915SP	17, 23
SS4121015SP	41
SS4121215SP	23, 35
SS4121615SP	23
SS4151415SP	41
SS5090610SP	35
SS6060440TP	33, 43
SS6090440SP	11
SS6090620SP	11
SS6091022TP	35
SS6110610TP	21, 33
SS6110650TP	35
SS6120930TP	41
SS6121010SP	11, 21
SS6121212TP	39
SS6151812TP	27
SS6151920SP	21
SS6153040SP	21
SS7060310SP	17
SS7060310SP	31, 33
SS7080510TP	15, 17
SS7080520SP	11, 33
SS7090520SP	19
SS7090530SP	35
SS7090610SP	17
SS7090850SP	17, 41
SS7091110TP	43
SS7092110TP	33
SS7110910TP	15
SS7111120TP	11, 13
SS7120640SP	17, 23
SS7120710SP	17
SS7120710SP	27, 41
SS7120910SP	29
SS7121410TP	15
SS7150740SP	39
SS7660520SP	13, 25
SS7681410TP	13
SS8080310TP	17, 43
SS8090710SP	9
SS8090740SP	35
SS8110422TP	11, 15
SS8110422TP	21, 31
SS8110422TP	35, 37
SS8120410SP	27
SS8660410SP	25
SS8660512TP	15
SS8660612TP	13
SS8660612TP	15, 25
SS8660612TP	27, 29
SS8660612TP	35
SS8661012TP	13
SS8661012TP	25, 37
SS8681412TP	13
SS9080410SP	33
SS9090410TP	31
SS9090640SP	15
SS9110543CP	41
SS9111010SP	33
SS9151740CP	21
TA1050504RO	23
TA1100604RO	23
WO3	41
WP0330501SP	33
WP0531000SD	45
WS0631510KP	27
WZ0640200KP	33

From the library of: Superior Sewing Machine & Supply LLC

NOTES

From the library of: Superior Sewing Machine & Supply LLC

NOTES

From the library of: Superior Sewing Machine & Supply LLC

NOTES

From the library of: Superior Sewing Machine & Supply LLC

NOTES

From the library of: Superior Sewing Machine & Supply LLC

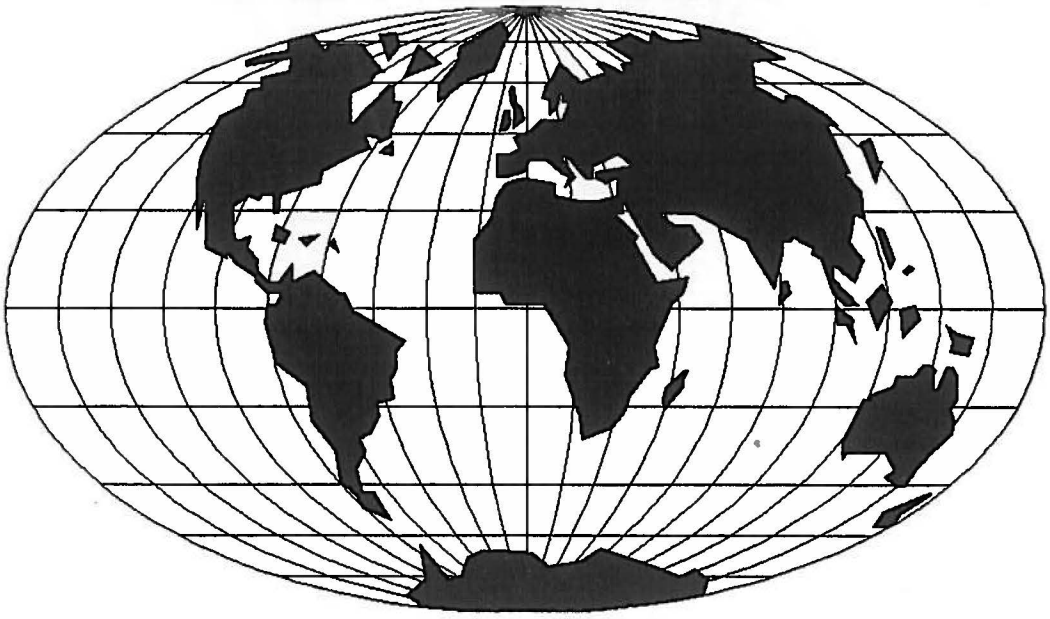

WORLDWIDE SALES AND SERVICE

Union Special Corporation maintains sales and service facilities throughout the world. These offices will aid you in the selection of the right sewing equipment for your particular operation. Union Special Corporation representatives and service technicians are factory trained and are able to serve your needs promptly and efficiently. Whatever your location, there is a qualified representative to serve you.

Corporate Office:

One Union Special Plaza
Huntley, IL 60142
Phone: 847•669•5101
Fax: 847•669•1096

European Distribution Center:

Union Special GmbH
Raiffeisenstrasse 3
D-71696 Möglingen, Germany
Tel: 49•07141•247•0
Fax: 49•7141•247•100

Brussels, Belgium
Charlotte, N.C.
El Paso, TX
Hong Kong, China
Huntley, IL
Leicester, England
Lille, France
Miami, FL
Milan, Italy
Möglingen, Germany
Montreal, Quebec
Osaka, Japan
Santa Fe Springs, CA

Other Representatives throughout all parts of the world.

Finest Quality

Union Special®
INDUSTRIAL SEWING EQUIPMENT

From the library of: Superior Sewing Machine & Supply LLC